USING THE LATCH SPACER SHIMS

The latch spacer shims are used to make adjustments to minimize the space between the door's inside face and the door stop or reduce door play. For cylindrical locks aligning to the vertical center of the strike mount the shims as shown below.

Mount the shims with the steps positioned aligned with the top of the latch like this.

This position will ensure that the cylindrical lock's auxilliary trigger will function properly.

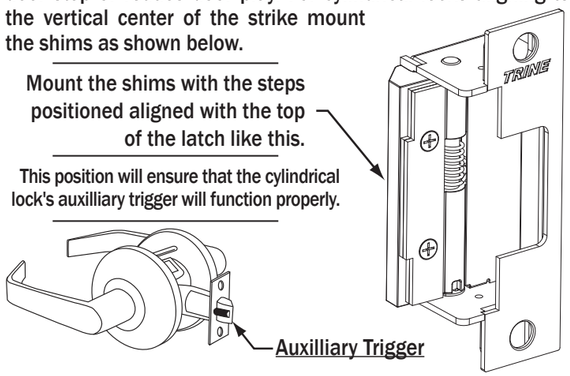

USING THE LATCH SPACER SHIMS (CONTINUED...)

For locks not aligning to the vertical center of the strike, mount the shims as shown below. Most if not all mortise locks will work with the latch shims mounted this way.

Mount the shims with the steps positioned away from the top of the latch like this.

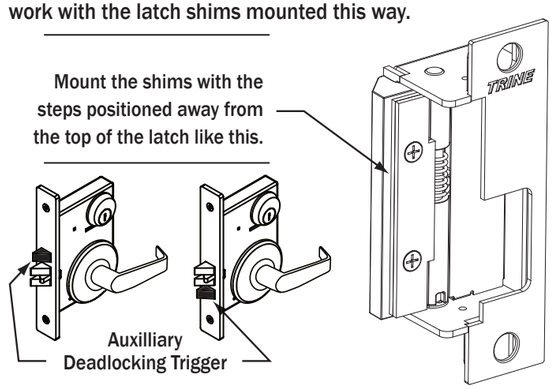

TROUBLESHOOTING THE COMPLETED INSTALLATION:

DO NOT APPLY AN OVER VOLTAGE OF MORE THAN 10% OVER THE RATED OPERATING VOLTAGE OF THE STRIKE OR THE SOLENOID WILL BE DAMAGED

SYMPTOM: Electric release is not actuating:

1. Verify proper voltage is present AT THE STRIKE. If voltage is present, the strike may have been affected during the installation, or dirt or debris may be preventing proper operation. Ensure that all moving parts are clean. DO NOT LUBRICATE THE SOLENOID.

2. If voltage IS NOT present:
   - Verify Circuit breaker is on
   - Verify voltage at the transformer/power supply output.
   - Verify that there are no additional, external switches or devices which may be interrupting your circuit.
   - Check for damaged wiring or bad wire splices.

SYMPTOM: Door will not open but strike is working

- First, check to see if the electric strike works properly while the door is open.
- Check for proper lock-latch engagement
- Check for pressure from the door on the electric strike by following these steps:
  Push the door from the outside, try and relieve the bolt to latch pressure and actuate the 4100. While the 4100 is unlatched swing the door open. If the door opens, then the bolt maybe applying pressure to the latch. Adjust the position of the 4100 to relieve the pressure.

Possible remedies include:

1. Re-adjust door closer.
2. Remove door silencers.
3. Remove, or trim, weather stripping around the door.
4. Adjust electric strike position if possible.
5. Correct excessive warping of door.

WIRING DIAGRAMS

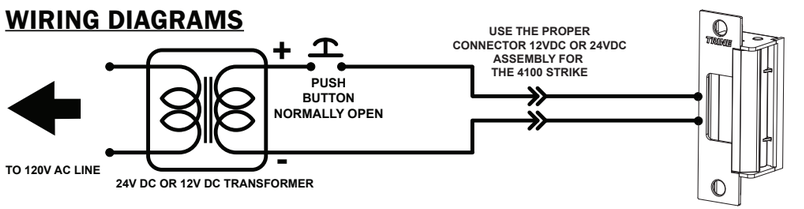

For AC use the 12 VDC connectors
For 12 - 24 VAC use 50-60 Hz

FAIL-SECURE ELECTRIC STRIKE

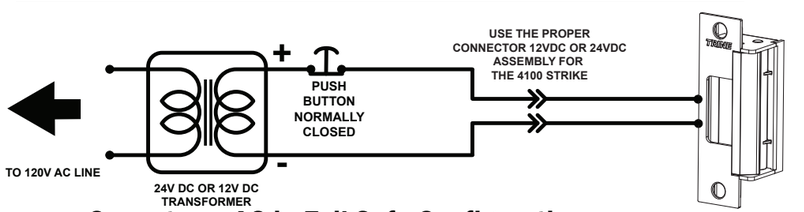

Cannot use AC in Fail Safe Configuration

FAIL-SAFE ELECTRIC STRIKE

4100 OPTIONS:

4100RS - FAIL SAFE CONFIGURATION
4100LB - LATCH BOLT MONITORING
4100RSLB - FAIL SAFE/LATCH BOLT MONITORING
BZ-12 - 12VDC Piezo Buzzer
BZ-24 - 24VDC Piezo Buzzer

TRINE ACCESS TECHNOLOGY®
PHONE: (718) 829-2332
FAX: (718) 829-6405
1440 FERRIS PLACE
BRONX, NY 10461
email: customerservice@trineonline.com
website: www.trineonline.com

V. 14.0814

4100 ELECTRIC STRIKE

INSTALLATION INSTRUCTIONS

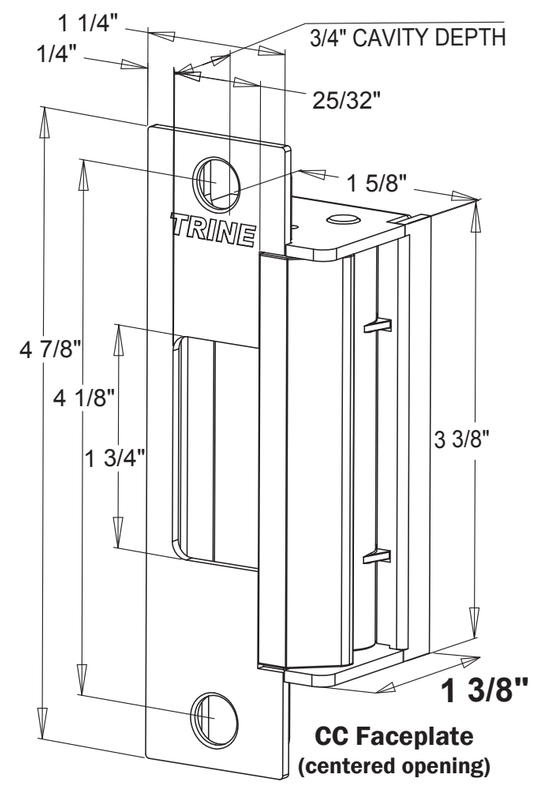

CC Faceplate
(centered opening)

FACEPLATE AND OFFSET DIMENSIONS:

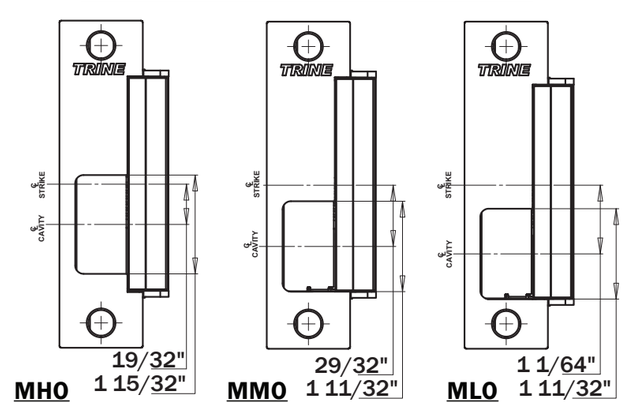

TRINE ACCESS TECHNOLOGY®
1440 Ferris Place | Bronx | New York | 10461

TRINE 4100
THE ONE BOX SOLUTION
FOR CYLINDRICAL AND MORTISE LOCKS

Congratulations on the purchase of this quality TRINE security product. This product has been designed to install easily, perform reliably, and provide years of trouble free security.

BEFORE PROCEEDING with your installation, please review the following list of features. If you have any questions after reading this document please call TRINE's TECHNICAL SUPPORT **(718) 829-2332 EXT. 447**, or visit the TRINE Web site at **www.trineonline.com**

The 4100 is WH recognized for:
Class A, 3 Hour Single door / frame configuration
- UL10C, Fire Tests of Door Assemblies
- UBC 7-2, Uniform building Code
- CAN4 S104, Standard Method for Fire Tests of Door Assemblies
NFPA 252 -
Issue: 1999/01/01 Standard Methods of Fire Tests of Door Assemblies

Intertek

NOTE: WH fire listing is void when using fail safe action.

ANSI/BHMA A156.5 - 1992 - 4-7/8" x 1-1/4" Fits
Cutout Specification A115.1 (with Slight Jamb Modification)
BHMA - Grade 1

4100 ELECTRICAL CHARACTERISTICS:

Voltage	Current Draw	Power Consumption	Resistance
12DC	.240 A	2.90 W	50 Ω
24DC	.114 A	2.74 W	210 Ω
12AC @ 50-60Hz	.210 A	2.50 W	50 Ω
16AC @ 50-60Hz	.281 A	4.48 W	50 Ω
24AC @ 50-60Hz	.420 A	10.08 W	50 Ω

When removing the connector and using the wires direct;
Red & Blue Wire accepts 12DC & 12-16 AC,
Brown & Blue Wire accepts 24DC.

OPERATING TEMP RANGE: -20°C TO +40°C

DO NOT APPLY AN OVER VOLTAGE OF MORE THAN 10% OVER THE RATED OPERATING VOLTAGE OF THE STRIKE OR THE SOLENOID WILL BE DAMAGED.

WHAT'S IN THE BOX:

1 - (1) 4100 Electric Strike Mechanism
2 - (4) Faceplates with Openings (CC, MHO, MMO, MLO)
3 - (2) #12-40 x 1 inch Philips Mounting Screws
4 - (2) #12-40 x 1 inch Torx® Security Mounting Screws
5 - (2) Quick Connect Socket & Wire Assembly 12VDC & 24VDC Version
6 - (2) Sealed Crimp Connectors
7 - (2) Latch Spacer Shims & (2) Mounting Screws
8 - (1) Frame Trim Skirt & (2) Screws

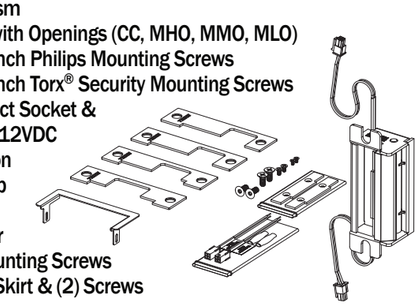

COMPATIBLE LOCKSETS:

CC: Centered Cylindrical (Reference HES® J faceplate)
Cylindrical Locksets up to 3/4" throw and all locksets center lined bolts: Corbin Russwin® Security Bolt, Weiserbolt®.

MHO: Mortise High Offset (Reference HES® KM faceplate)
Accurate®, Arrow®, Best®, Corbin Russwin®, Falcon® (1992M Series), Sargent® (7800, 8200 & 9200 Series), Yale® (8800).

MMO: Mortise Medium Offset (Reference HES® K faceplate)
Baldwin®, Marks®, PDQ®.

MLO: Mortise Low Offset (Reference HES® KD faceplate) Jackson®, Sargent® (7700 & 8100), Schlage® (L Series), Yale® (8700).

Additional Faceplates:

CCRD - 4-7/8" x 1-1/4" Centered Cavity with Radiused Corners
CRD7 - 6-7/8" x 1-1/4" Tall Centered Cavity with Radiused Corners
CRD8 - 7-15/16" x 1-7/16" Tall Centered Cavity with Radiused Corners
CRD9 - 9" x 1-1/4" Tall Centered Cavity

PREMIUM TRIM SKIRT FOR THE 4100

USING THE TRIM SKIRT

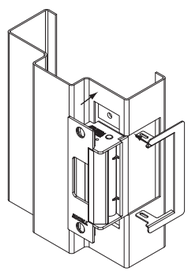

The skirt can be used to clean up the cut line of the frame face during installation. The Trim Skirt comes with 2 screws for fastening to the top and bottom of the 4100.

Available in 6 architectual finishes: US32D, US32, US3, US4, US10, US10B to match the finish of the electric strike and faceplates.

CCTS

If retrofitting for the electric strikes listed below, a separate Skirt may be used to cover the gap left in the frame. Note: Specify the finish of the CCTS so it matches the 4100 you have.

H.E.S.® 1006, Folger Adams® 712/732, Von Duprin® 6200 Series, or Trine EN Series Strikes

RECOMMENDED PRE-INSTALLATION CHECK:

1. Determine that the door swings without interfering with jamb or sill; the door must operate properly in order for the system to provide best results.
2. The door must be equipped with a door closer and the door closer "latch mode" must hold door in a completely closed position in order to avoid the lock latch from applying pressure against the releasing latch portion of the electric strike.
3. Electrical wire connections must be completed and ready to be terminated inside the frame.
4. Confirm that the power line in the frame is the correct voltage and that the switch works properly.
5. Confirm proper clearance exists between the end of the lock latch and jamb.
6. The faceplate **opening** used on the electric door strike must be centered with lock latch centerline when it is installed on the doorjamb.
7. For best installation results, the door frame must be reasonably flat and straight.

FRAME PREPARATION

CC, MHO, MMO ON HOLLOW METAL FRAME

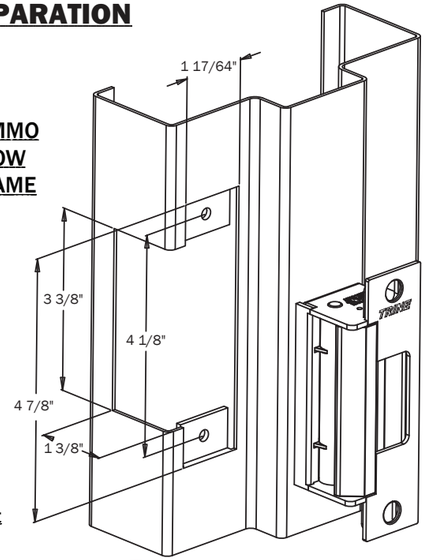

Use the Premium Trim Skirt to clean up your cut line (see pg 4)

MLO ON HOLLOW METAL FRAME (note 7/8" top dimension)

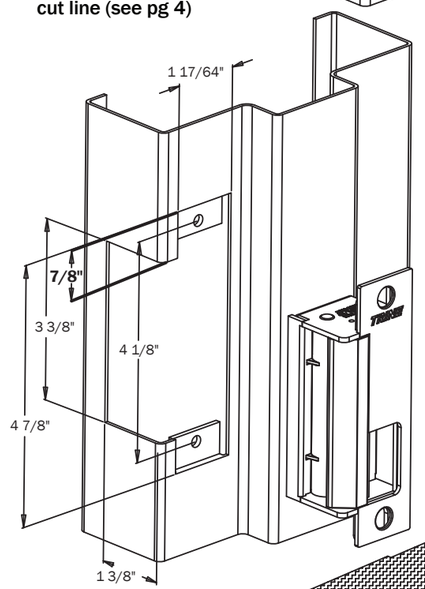

Use the Premium Trim Skirt to clean up your cut line (see pg 4)

ON WOOD FRAME

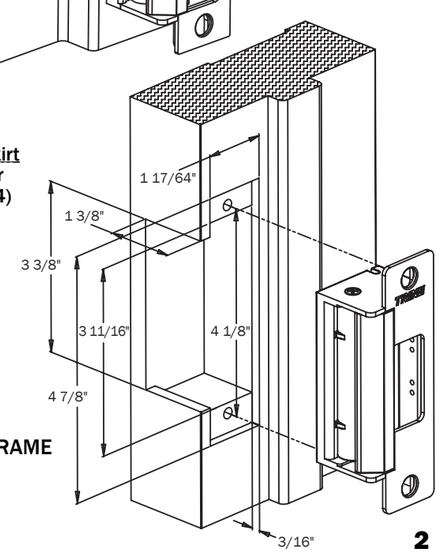

INSTALLING THE 4100 STRIKE:

NOTE: The 4100 electric strike has two terminal wires to supply power to two separate solenoids.
USE THE BOTTOM WIRE LEADS ONLY.

1. Prepare door frame as shown on page 2 (based on frame type).
2. Pull the switched power wires to the door frame. (Caution: Connect the power ONLY as the last step.)
3. Carefully choose the quick connect socket to match the required voltage. The quick connect sockets are labeled 12VDC (Blue Wire) or 24VDC (White Wire).
4. Use the crimp connectors to terminate the ends of the quick connect socket to the power wires coming out of the frame.
5. Connect the strikes bottom terminal to the quick connect socket.
6. Tuck the wires inside the door frame.
7. Install the electric strike into the door frame
8. Connect the power supply and turn power on.
9. Test your system.

FLUSH TO FRAME

If the 4100 electric strike does not mount flush to the rabbet of the frame, use the enclosed shims to correct this condition. There are two ways of mounting the shim; 1) between the strike mechanism and the faceplate as shown in figure #2 or 2) between the frame mounting tab and the strike mechanism as shown on figure #3.

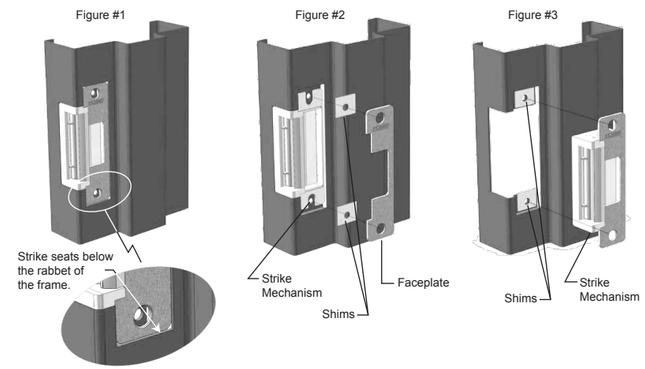

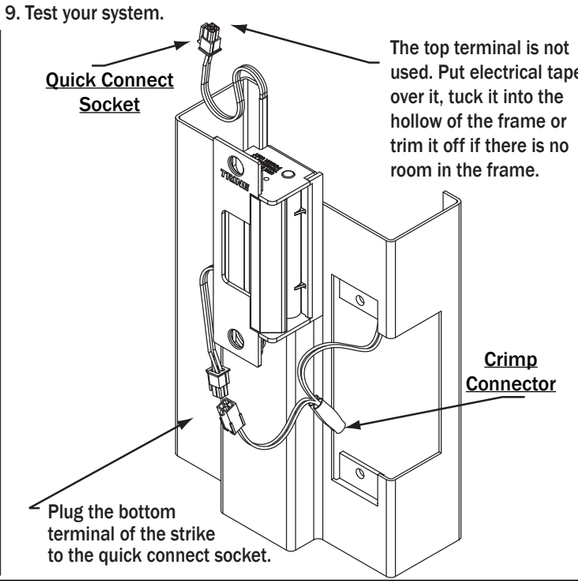

Figure #1

WITH SOME LOCKING MECHANISMS

We have included different kinds of shims and trims to help fix problems that are encountered in the field while installing the 4100.

Here for example is a mortise lock with an anti-friction bolt and dead locking trigger with sharp edges see Figure #1. Depending on the mounting relationship of the strike and the lock, the dead locking trigger can wedge between the faceplate and the latch keeper as shown on Figure #2a & 2b. This can create a pre-load condition on the latch keeper which will prevent the strike from unlocking.

Use the latch shim as shown on Figure #3a & 3b to prevent the dead locking trigger from getting trapped between the latch keeper and the strike faceplate. The faceplate must be notched to clear the latch shim (see Figure #3a).

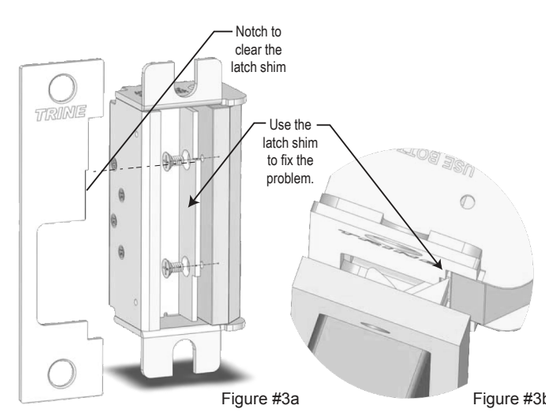

Figure #3a Figure #3b

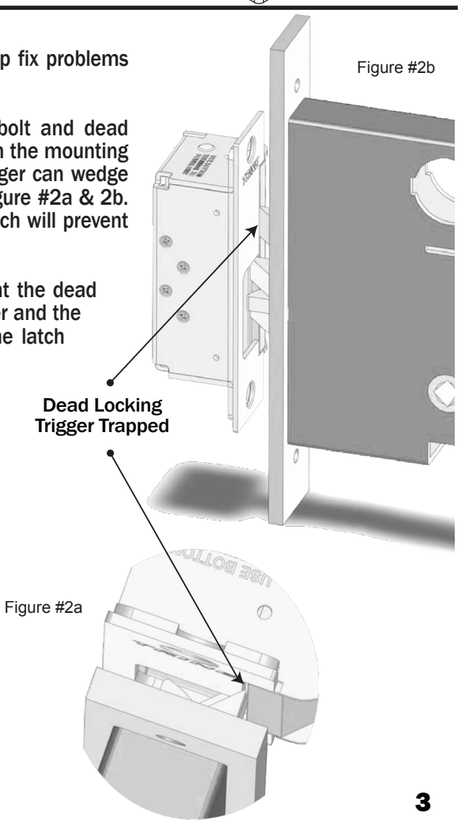

4200 ELECTRIC STRIKE

INSTALLATION INSTRUCTIONS

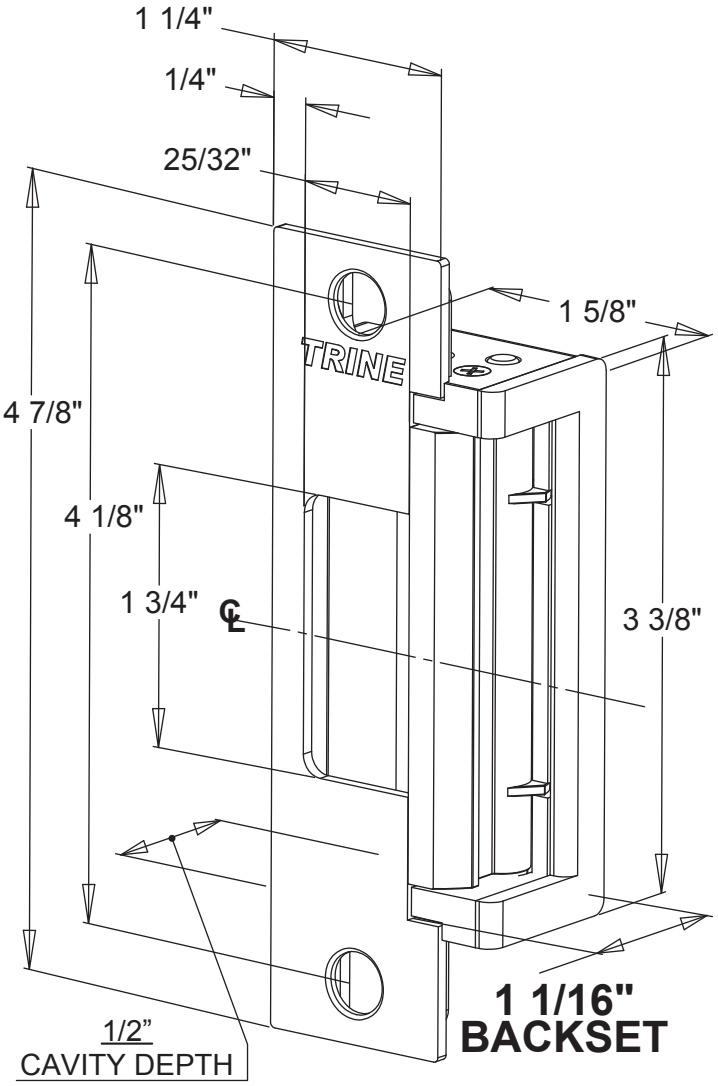

AVAILABLE FINISHES	
32D (630) Satin Stainless	**DKBZ** Dark Bronze Powder Coat
ALUM Aluminum Powder Coat	**GRN** Green Powder Coat
BLK Black Powder Coat	**WHT** White Powder Coat

TRINE ACCESS TECHNOLOGY®

1440 Ferris Place I Bronx I New York I 10461

AXION PREMIUM ELECTRIC STRIKES

TRINE 4200
THE ONE BOX SOLUTION FOR CYLINDRICAL LOCKS AND DEADLATCHES

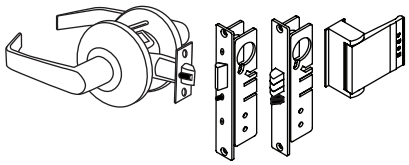

Congratulations on the purchase of this quality TRINE security product. This product has been designed to install easily, perform reliably, and provide years of trouble free security.

BEFORE proceeding with your installation, please review the following list of features. If you have any questions after reading this document please call TRINE's TECHNICAL SUPPORT **(718) 829-2332 EXT. 447**, or visit the TRINE web site at **www.trineonline.com**

WHAT'S IN THE BOX:

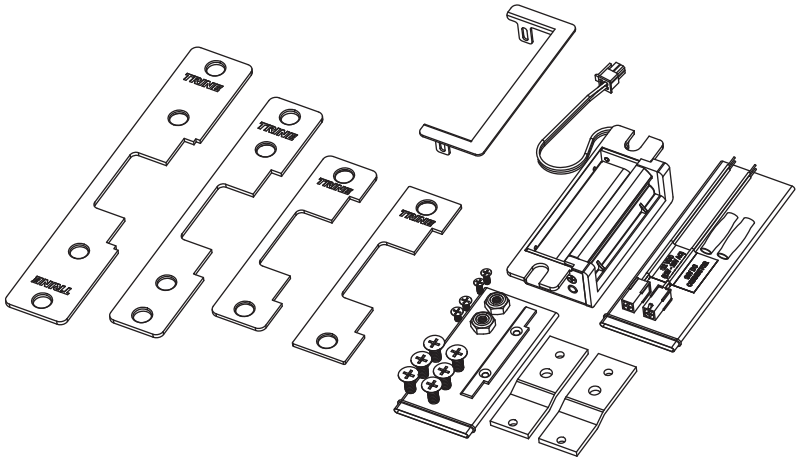

1 - (1) 4200 Electric Strike Mechanism
2 - (4) Faceplates as shown
3 - (6) #12-24 x 1/2 inch Philips Mounting Screws
4 - (2) #12-24 Lock Nut
5 - (2) Quick Connect Socket & Wire Assembly 12VDC & 24VDC Version
6 - (2) Sealed Crimp Connectors
7 - (1) Latch Spacer Shims & (2) Mounting Screws
8 - (1) Frame Trim Skirt & (2) Screws
9 - (2) Mounting Tabs

4200 ELECTRICAL CHARACTERISTICS:

Voltage	Current Draw	Power Consumption	Resistance
12DC	.240 Amps	2.90 Watts	50 Ohms
24DC	.114 Amps	2.74 Watts	210 Ohms
12AC @ 50-60Hz	.210 Amps	2.50 Watts	50 Ohms
16AC @ 50-60Hz	.281 Amps	4.48 Watts	50 Ohms
24AC @ 50-60Hz	.420 Amps	10.08 Watts	50 Ohms

When removing the connector and using the wires direct; Blue Wire is Common, Red Wire accepts 12DC & 12-16AC, Brown Wire accepts 24DC.
RS IS FAILSAFE ACTION (LOCKS WITH POWER) AND IS DC ONLY

OPERATING TEMP RANGE: -20°C TO +40°C

DO NOT APPLY A VOLTAGE OF MORE THAN 10% OVER THE RATED OPERATING VOLTAGE OF THE STRIKE OR THE SOLENOID WILL BE DAMAGED

4200 OPTIONS:

4200RS - FAIL SAFE CONFIGURATION
4200LB - LATCH BOLT MONITORING (coming soon)
4200RSLB - FAIL SAFE/LATCH BOLT MONITORING (coming soon)
BZ-12 - 12VDC Piezo Buzzer
BZ-24 - 24VDC Piezo Buzzer

FRAME PREPARATION

Aluminum Frame

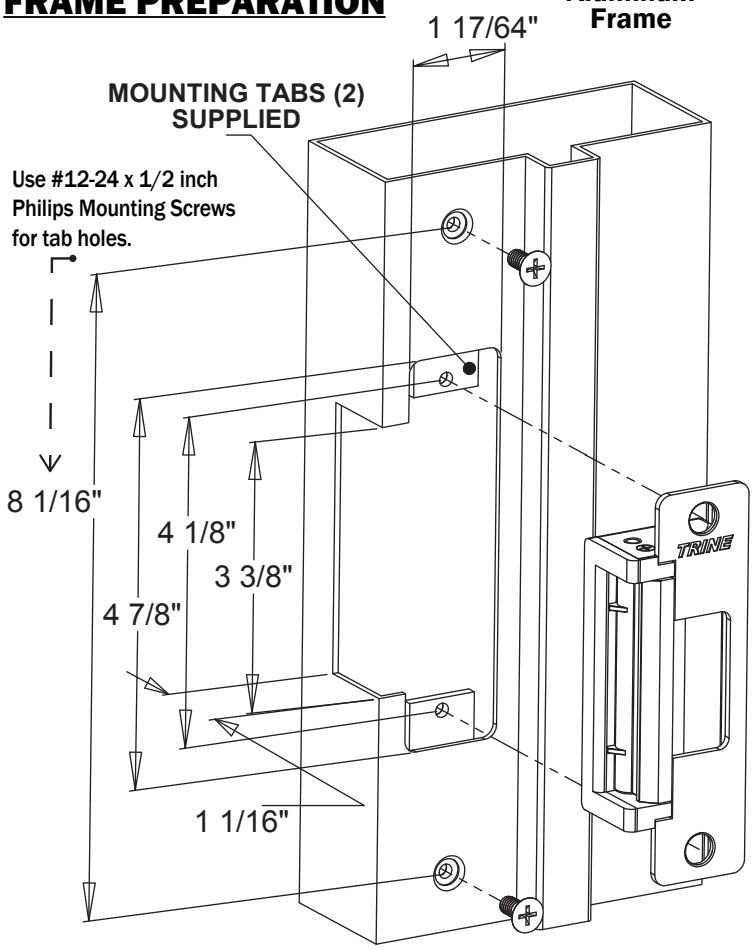

Metal Frame

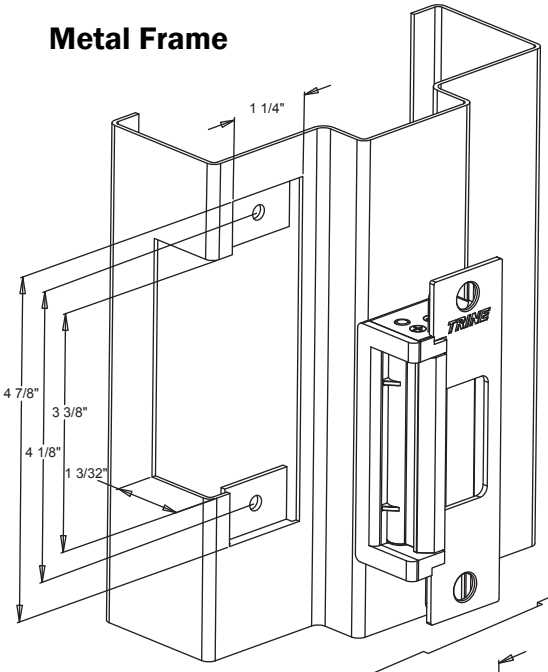

TAB DIMENSIONS (Included)

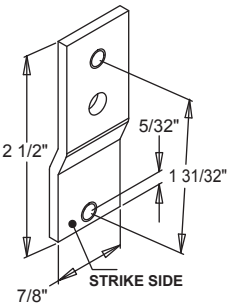

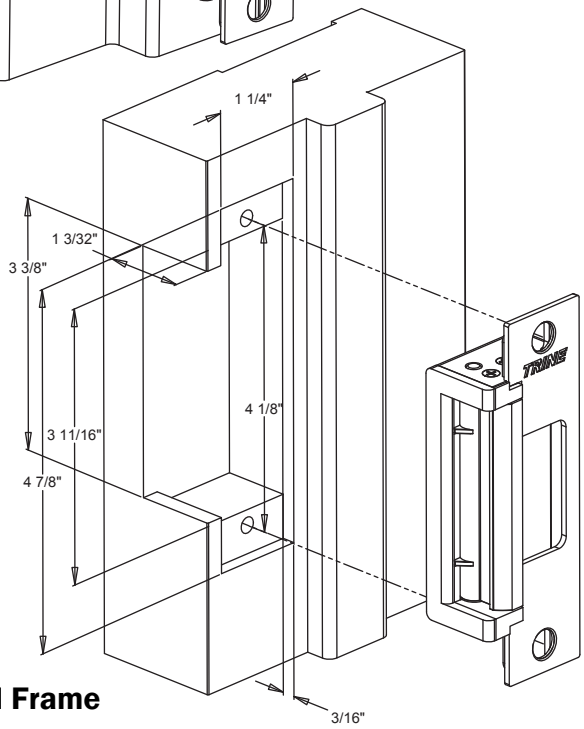

Wood Frame

FACEPLATE DIMENSIONS

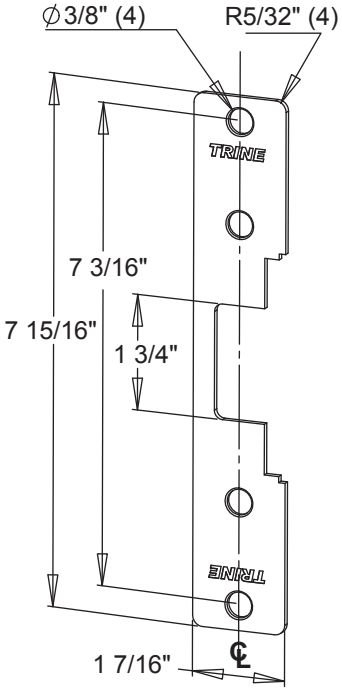

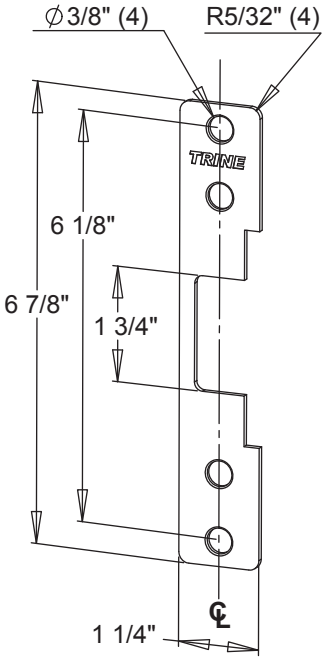

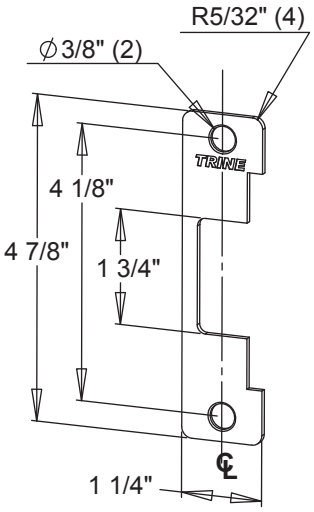

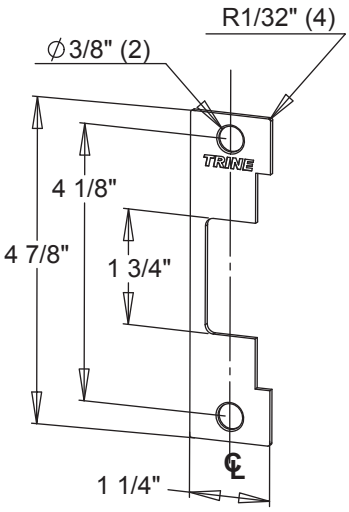

RECOMMENDED PRE-INSTALLATION CHECK:

1. Determine that the door swings without interfering with jamb or sill; the door must operate properly in order for the system to provide best results.
2. The door must be equipped with a door closer and the door closer "latch mode" must hold door in a completely closed position in order to avoid the lock latch from applying pressure against the releasing latch portion of the electric strike.
3. Electrical wire connections must be completed and ready to be terminated inside the frame.
4. Confirm that the power line in the frame is the correct voltage and that the switch works properly.
5. Confirm proper clearance exists between the end of the lock latch and jamb.
6. The faceplate **opening** used on the electric door strike must be centered with lock latch centerline when it is installed on the doorjamb.
7. For best installation results, the door frame must be reasonably flat and straight.

INSTALLING THE 4200 STRIKE:

NOTE: The 4200 electric strike has two terminal wires to supply power to two separate solenoids.

1. Prepare door frame as shown on page 2 (based on frame type).
2. Pull the switched power wires to the door frame. (Caution: Connect the power ONLY as the last step.)
3. Carefully choose the quick connect socket to match the required voltage. The quick connect sockets are labeled 12VDC (Blue Wire) or 24VDC (White Wire).
4. Use the crimp connectors to terminate the ends of the quick connect socket to the power wires coming out of the frame.
5. Connect the strikes bottom terminal to the quick connect socket.
6. Tuck the wires inside the door frame.
7. Install the electric strike into the door frame
8. Connect the power supply and turn power on.
9. Test your system.

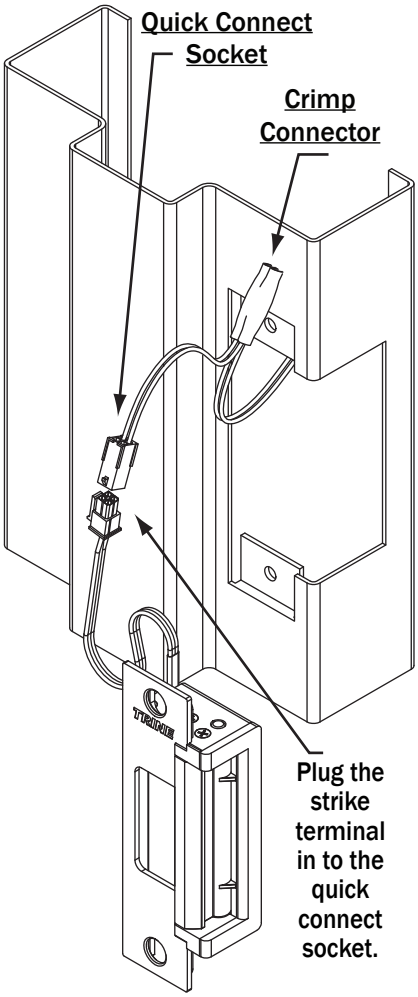

REMOVABLE FASCIA (Match the Color of the Frame)

The 4200 Fascia is designed to be replaceable and is available in 5 powder coat finishes. Replacing the Fascia is easy, follow these steps:

1. Remove top and bottom assembly screws (**see a.**) from the electric strike, these hold the Fascia (**see b.**) in place.
2. Fascia then slides away from the electric strike – note two additional holes (**see c.**) that provide stability to the Fascia.
3. New Fascia is aligned to the holes and pushed in until screw holes align.
4. Insert both the bottom and top assembly screws to secure the Fascia into the electric strike body.

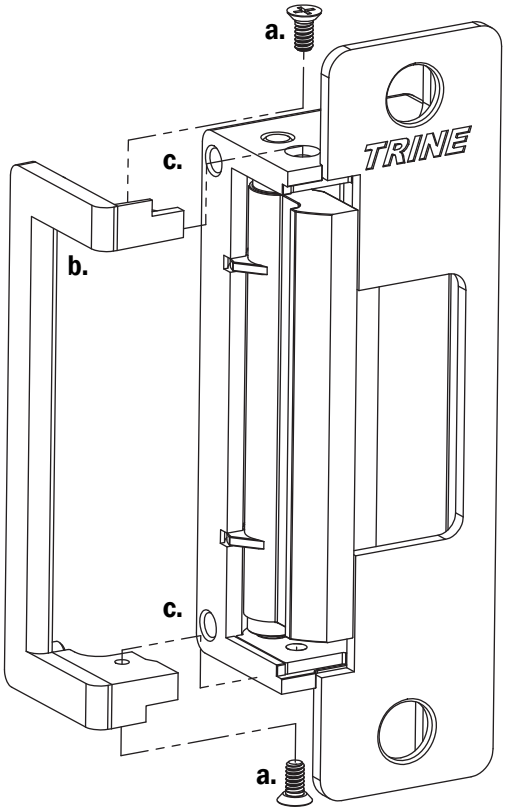

Available in 5 powdercoat finishes: Aluminum (ALUM), Black (BLK), Dark Bronze (DKBZ), Green (GRN), and White (WHT) which can match the finish of the faceplate and trim skirts.

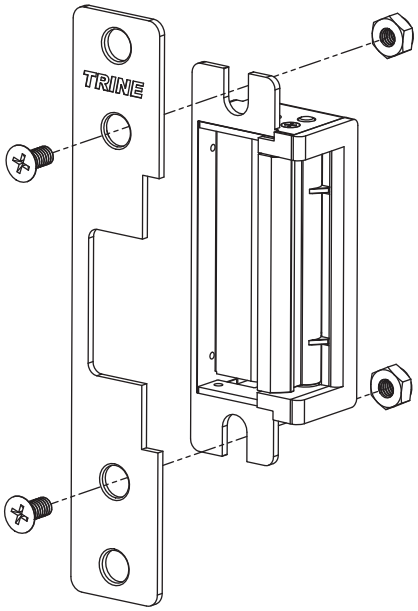

LONGER FACEPLATE ASSEMBLY

Longer Faceplates have additional holes. 2 assembly holes to mount the faceplate to the electric strike. 2 holes for mounting the assembled faceplate/strike to the frame.

USING THE LATCH SPACER SHIM

The latch spacer shim is used to make an adjustment to minimize the space between the door's inside face and the door stop, or reduce door play. For cylindrical locks aligning to the vertical center of the strike mount the shim as shown below.

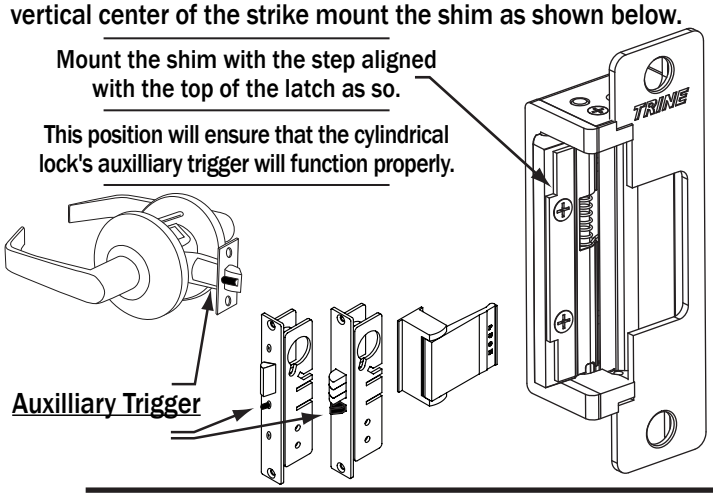

PREMIUM TRIM SKIRT FOR THE 4200

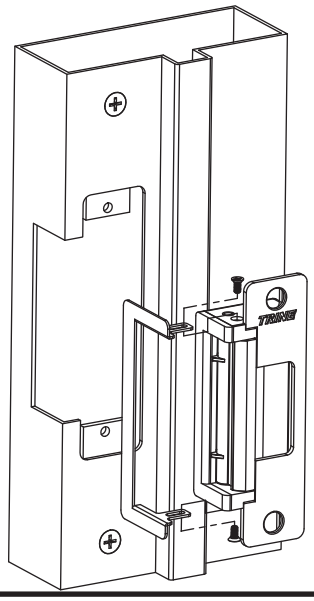

USING THE TRIM SKIRT

The skirt can be used to clean up the cut line of the frame face during installation. The Trim Skirt comes with 2 longer screws (included) for fastening to the top and bottom of the 4200.

Available in 5 powdercoat finishes: Aluminum (ALUM), Black (BLK), Dark Bronze (DKBZ), Green (GRN), and White (WHT) which can match the finish of the faceplate and Fascia's.

TROUBLESHOOTING THE COMPLETED INSTALLATION:

DO NOT APPLY A VOLTAGE OF MORE THAN 10% OVER THE RATED OPERATING VOLTAGE OF THE STRIKE OR THE SOLENOID WILL BE DAMAGED

SYMPTOM: Electric release is not actuating:

1. Verify proper voltage is present AT THE STRIKE. If voltage is present, the strike may have been affected during the installation, or dirt or debris may be preventing proper operation. Ensure that all moving parts are clean. DO NOT LUBRICATE THE SOLENOID.

2. If voltage IS NOT present:
   - Verify Circuit breaker is on
   - Verify voltage at the transformer/power supply output.
   - Verify that there are no additional, external switches or devices which may be interrupting your circuit.
   - Check for damaged wiring or bad wire splices.

SYMPTOM: Door will not open but strike is working

- First, check to see if the electric strike works properly while the door is open.
- Check for proper lock-latch engagement
- Check for pressure from the door on the electric strike by following these steps:
  Push the door from the outside, try and relieve the bolt to latch pressure and actuate the 4200. While the 4200 is unlatched swing the door open. If the door opens, then the bolt maybe applying pressure to the latch. Adjust the position of the 4200 to relieve the pressure.

Possible remedies include:

1. Re-adjust door closer.
2. Remove door silencers.
3. Remove, or trim, weather stripping around the door.
4. Adjust electric strike position if possible.
5. Correct excessive warping of door.

WIRING DIAGRAMS

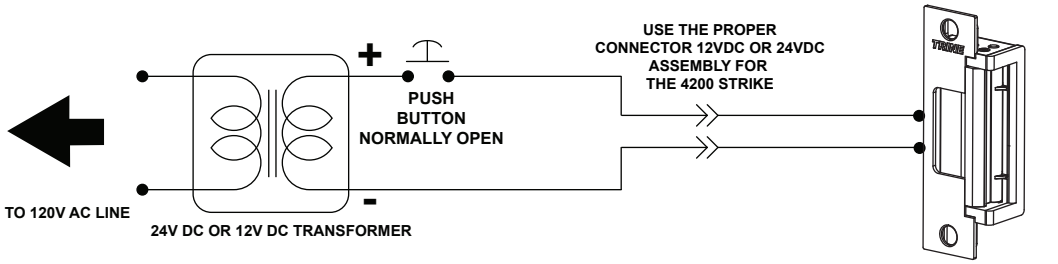

For AC use the 12 VDC connectors
For 12 - 24 VAC use 50-60 Hz

FAIL-SECURE ELECTRIC STRIKE

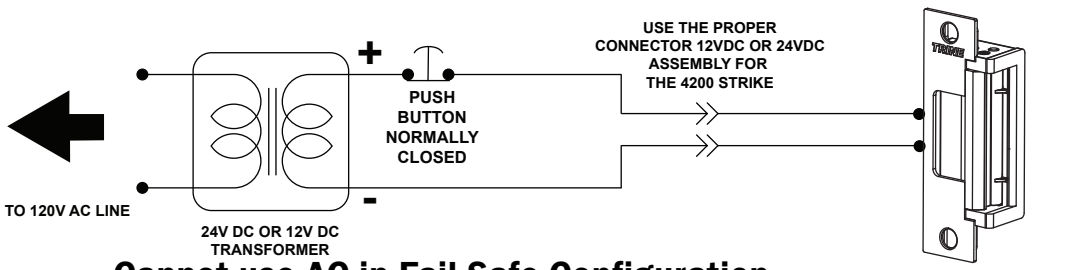

Cannot use AC in Fail Safe Configuration
RS IS FAILSAFE ACTION (LOCKS WITH POWER) AND IS DC ONLY

FAIL-SAFE ELECTRIC STRIKE

TRINE ACCESS TECHNOLOGY®
PHONE: (718) 829-2332
FAX: (718) 829-6405
1440 FERRIS PLACE
BRONX, NY 10461
email: customerservice@trineonline.com
website: www.trineonline.com

INSTRUCTIONS FOR CHANGING THE 4800F FROM FAIL SECURE TO FAIL SAFE:

To change the Fail Secure 4800F into a Fail Safe , open the mechanism side of the strike (as shown on the right) by removing the mechanism cover screws (3 places) and the cover. Lift the solenoid and gently pull off the solenoid plunger and BLUE spring assembly and replace it with the solenoid plunger and RED colored spring assembly. Pull off the actuator cam, and replace it with the fail-safe cam. Before closing the unit, make sure that the wires are properly seated on the wire channel (see figure on right). Save the plunger and BLUE colored spring assembly for future use.

For changing from Fail Safe to Fail Secure, just reverse the above procedure

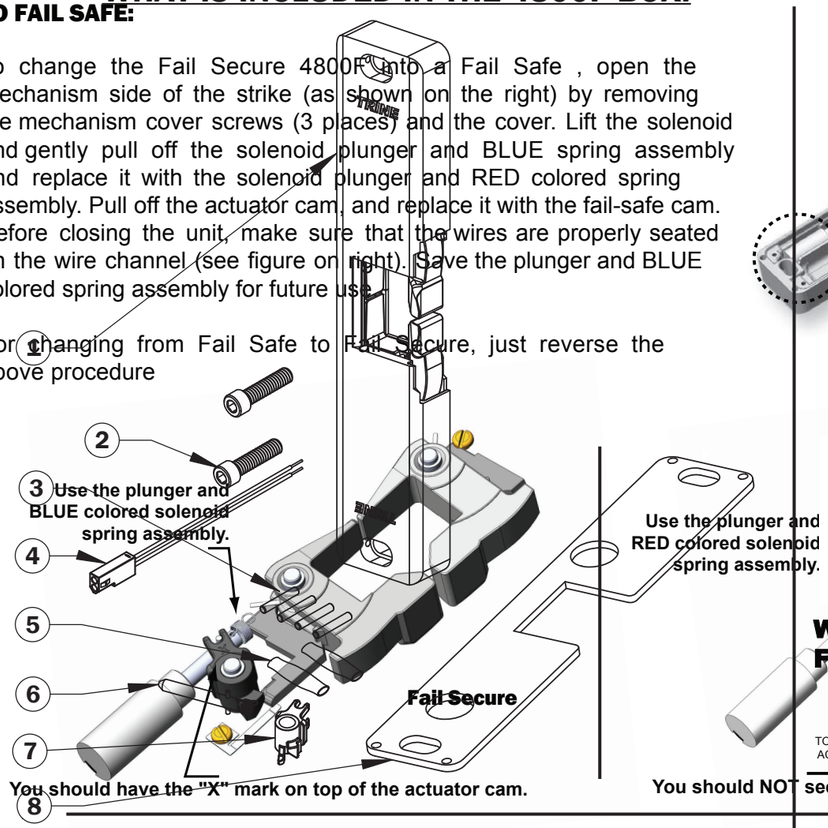

WHAT IS INCLUDED IN THE 4800F BOX:

RECOMMENDED TOOLS:

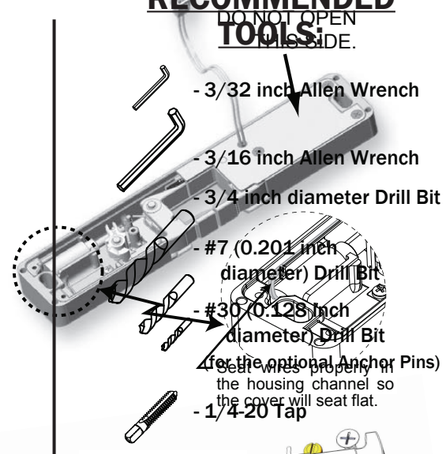

WIRING FOR FAIL-SECURE MODE

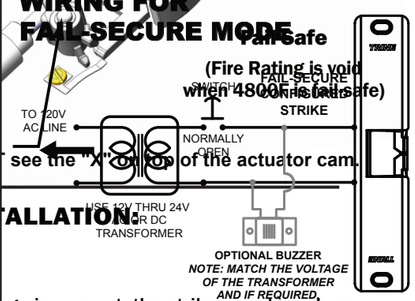

WIRING FOR FAIL-SAFE MODE

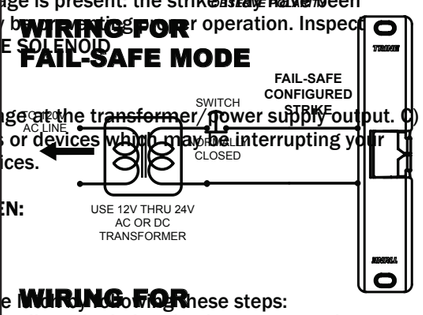

WIRING FOR FAIL-SAFE MODE WITH OPTIONAL BUZZER

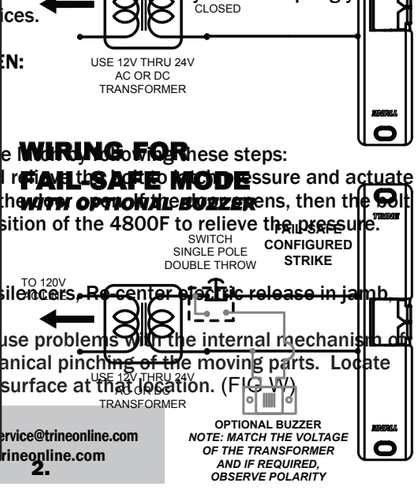

INCLUDED IN THE BOX ARE:

(FIG W)

1 - (1) 4800 OR 4801 SURFACE MOUNTED STRIKE
2 - (2) 1/4-20 x 1" UH CAP SOCKET MOUNTING SCREWS
3 - (4) ANCHOR SYSTEM PINS
4 - (1) QUICK CONNECT SOCKET AND WIRE ASSEMBLY
5 - (2) SEALED CRIMP CONNECTORS
6 - (1) FAIL SAFE SPRING (RED COLORED) & SOLENOID PLUNGER
7 - (1) FAIL SAFE CAM (NOTE: NOT FIRE RATED WHEN CONFIGURED FAIL-SAFE)
8 - (1) 1/8" THICK SPACER PLATE/ FRAME MOUNTING TEMPLATE

RECOMMENDED PREINSTALLATION CHECK FOR THE 4800F SURFACE MOUNT STRIKE:

1. Determine that door is properly adjusted. Door must operate properly in order for system to provide best results.
2. Door must swing properly, without interfering with jamb or sill.
3. The door should be equipped with a door closer and the door closer "latch mode" must hold door in a completely closed position in order to avoid the lock latch from applying pressure against the releasing latch portion of the electric strike.
4. Electrical wire connections must be properly made and properly terminated inside the frame.
5. Confirm that the power line in the frame is the correct voltage, amperage, and that the switch works properly.
6. Confirm proper clearance exists between the end of the lock latch and jamb.
7. The electric door strike must be aligned properly with lock latch when it is installed on the doorjamb.
8. For best installation results, the door frame must be reasonably flat and straight.

Uneven Frame Soffit | Ideal Frame Soffit Flatness

TROUBLESHOOTING THE COMPLETED INSTALLATION:

SYMPTOM: ELECTRIC RELEASE IS NOT ACTUATING:

1. Verify proper voltage is present AT STRIKE. If voltage is present: the strike may have been affected during the installation, or dirt or debris may be preventing proper operation. Inspect electric release and clean. NOTE: DO NOT LUBRICATE SOLENOID.
2. If voltage is NOT present: A) Verify circuit breaker is on, B) Verify voltage at the transformer/power supply output. C) Verify that there are no additional, external switches or devices which may be interrupting your circuit. D) Check for damaged wiring or bad wire splices.

SYMPTOM: STRIKE IS WORKING BUT WILL NOT OPEN:

1. Check for other locks on door
2. Check for proper lock-latch engagement
3. Check for excessive back pressure on door release mechanism. Perform these steps:
   A) Push the door from the outside to try and release the latch pressure and actuate the 4800F. B) While the 4800F is unlatched swing the door open. If door opens, then the "latch mode" must hold door in a completely closed position in order to avoid the lock maybe applying pressure to the latch. Adjust the position of the 4800F to relieve the pressure.

POSSIBLE REMEDIES:

1. Remove door silencers. Re-center electric release in jamb. Remove or trim weather stripping around the door.
2. Installing the strike on an uneven surface can cause problems with the internal mechanism of this device. Specifically, it will cause localized mechanical pinching of the moving parts. Locate where the pinching is occurring and level the frame surface at that location. (FIG W)

V. 16.0226

Phone: (203) 730-1756
FAX: (203) 730-1781
2 Parklawn Dr., Suite F
Bethany, CT 06524
email: customerservice@trineonline.com
website: www.trineonline.com

4800F ELECTRIC STRIKE

USE THE 4850ITL TO QUICKLY MARK, TEST, ADJUST, CENTER PUNCH AND SKIP MOST OF THESE STEPS!

CHECK OUT THE VIDEO ON YouTube

TRINE ACCESS TECHNOLOGY
2 Parklawn Drive | Bethany | Connecticut | 06524

4850ITL

more info @ trineonline.com/4850itl.php

INSTALLATION PROCEDURE:

INSTALLATION INSTRUCTIONS

CAUTION: TO AVOID ELECTRICAL SHOCK AND INJURIES, BEFORE DOING YOUR WIRING, TURN OFF THE POWER FROM THE CIRCUIT BREAKER.

1. Mark the end position of the exit devices latchbolt on the doorframe. (Take off the original strike if present). See Figure 1.
2. Using the marks you just made as your guide, position the 4800F over the mark on the frame. Make sure that the Auxiliary latch rides up properly over the 4800F's edge, and is engaged, and that the door is in the fully closed position. See Figure 2
3. When you are confident with the position of the 4800F, mark two perpendicular edges of the 4800F on the frame See Figure 3
4. Put the 4800F aside for a moment and place the spacer supplied with the 4800F inside the marks you just made on the frame.
5. Using the spacer as a template; mark the two mounting holes and the wire exit hole. If you are using the optional anchor pins, mark the anchor pin positions using the spacer as a template. See Figure 4
6. Using a #7 bit, drill the two mounting holes and tap them ¼-20.
7. Using a ¾ inch diameter bit, drill the power wire exit hole
8. If you are utilizing the anchor pin system, use a #30 bit, drill the four anchor pin holes.
9. Deburr any sharp edges around the holes after drilling, so that the 4800F will rest on a smooth clean surface and the wires will not be accidentally cut or damaged while installing.
10. Pull the power wiring down the doorframe and through the ¾ inch diameter power wire hole
11. Using the provided sealed crimp connectors, terminate the quick connect socket assembly to the power wires. See Figure 5 (NOTE: The 4800F is not polarized)
12. If you intend to use the anchor pins system, insert them into the four holes on the back side of the 4800F. See Figure 6. If you also intend to use the 1/8" thick spacer plate, you can now slip the plate over the pins.
13. Snap together the power supply side connector coming off the frame to the 4800 connector. Carefully push the wires and connectors back into the frame.
14. Using the 2 mounting screws, mount the 4800F strike to the frame.
15. Adjust the strike to the desired position and tighten the mounting screws using the 3/16 inch Allen wrench.
16. Using the 3/32 inch Allen wrench turn the two setscrews on the side of the 4800F until they support the strike. DO NOT over tighten the setscrews.
17. Turn the power ON and test your installation. Installation is now complete.

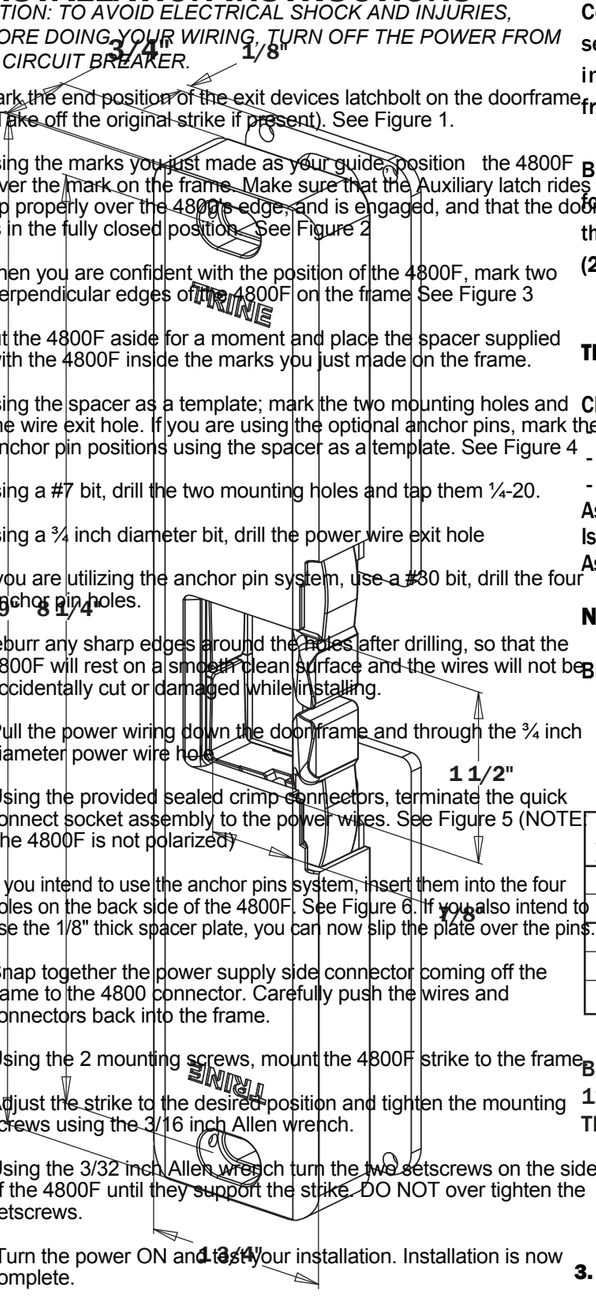

THE FIRE RATED SOLUTION FOR RIM PANIC EXIT DEVICES

Congratulations on the purchase of this quality TRINE security product. This product has been designed to install easily, perform reliably, and provide years of trouble free security.

BEFORE PROCEEDING with your installation, please review the following list of features. If you have any questions after reading this document please call TRINE's TECHNICAL SUPPORT (203) 730-1756, or visit us online @ trineonline.com

The 4800F is WH recognized for:

Class A, 3 hour single door / frame configuration
- UL10C, Fire Tests of Door Assemblies
- UBC 7-2, Uniform building Code
- CAN4 S104, Standard Method for Fire Tests of Door Assemblies NFPA 252
Issue: 1999/01/01 Standard Methods of Fire Tests of Door Assemblies

NOTE: WH fire listing is void when using fail safe action.

BHMA Grade 1 Electric Strike

Figure 1
With the door closed mark the position of the latchbolt on the frame.

Figure 2
Position the 4800F on the frame and mark the desire position.

Figure 3

Figure 4
Use the spacer as template to mark the holes you desire to use.

Figure 5
Crimp the quick connect socket assembly to the power wires.

Figure 6
Insert the anchor pins in the back of any 4800F series strike if you desire to use this

4800F ELECTRICAL CHARACTERISTICS:

Voltage	Pull-in/Hold Amps (A)	Duty	Sound
12DC	.566 A/.217A	Intm/Cont.	Silent
24DC	.253 A/.099 A	Intm/Cont.	Silent
12AC @ 50-60 Hz	.509 A/.181 A	Intm/Cont.	Silent
16AC @ 50-60 Hz	.405 A/.149 A	Intm/Cont.	Silent
24AC @ 50-60 Hz	.215 A/.087 A	Intm/Cont.	Silent

Built-in Electronics: The 48 atically allows 12-24AC & DC power plus surge and kickback protection. There are no external 'pacs' to use or install.

OPERATING TEMP RANGE: -20° and +65°C

DO NOT APPLY AN OVER VOLTAGE OF MORE THAN 10% OVER THE RATED OPERATING VOLTAGE OF THE STRIKE OR THE SOLENOID WILL BE DAMAGED

INSTRUCTIONS FOR CHANGING THE 4800F FROM FAIL SECURE TO FAIL SAFE:

To change the Fail Secure 4800F into a Fail Safe , open the mechanism side of the strike (as shown on the right) by removing the mechanism cover screws (3 places) and the cover. Lift the solenoid and gently pull off the solenoid plunger and BLUE spring assembly and replace it with the solenoid plunger and RED colored spring assembly. Pull off the actuator cam, and replace it with the fail-safe cam. Before closing the unit, make sure that the wires are properly seated on the wire channel (see figure on right). Save the plunger and BLUE colored spring assembly for future use.

For changing from Fail Safe to Fail Secure, just reverse the above procedure

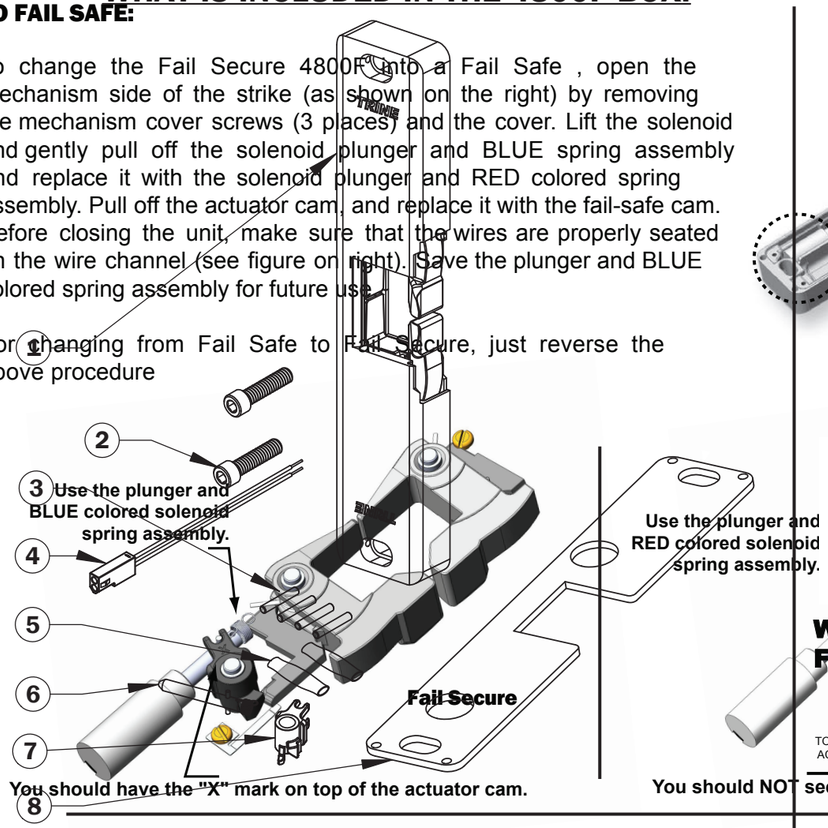

WHAT IS INCLUDED IN THE 4800F BOX:

RECOMMENDED TOOLS:

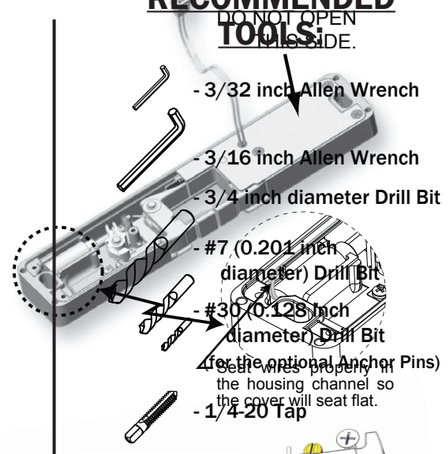

WIRING FOR FAIL-SECURE MODE

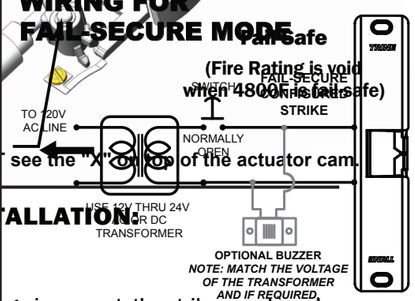

WIRING FOR FAIL-SAFE MODE

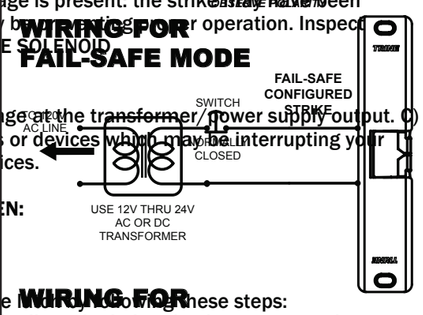

WIRING FOR FAIL-SAFE MODE WITH OPTIONAL BUZZER

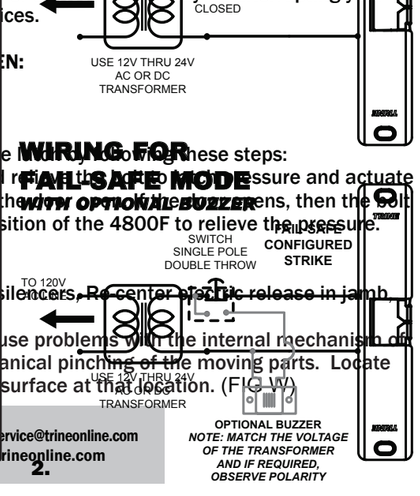

INCLUDED IN THE BOX ARE:

(FIG W)

1 - (1) 4800 OR 4801 SURFACE MOUNTED STRIKE
2 - (2) 1/4-20 x 1" UH CAP SOCKET MOUNTING SCREWS
3 - (4) ANCHOR SYSTEM PINS
4 - (1) QUICK CONNECT SOCKET AND WIRE ASSEMBLY
5 - (2) SEALED CRIMP CONNECTORS
6 - (1) FAIL SAFE SPRING (RED COLORED) & SOLENOID PLUNGER
7 - (1) FAIL SAFE CAM (NOTE: NOT FIRE RATED WHEN CONFIGURED FAIL-SAFE)
8 - (1) 1/8" THICK SPACER PLATE/ FRAME MOUNTING TEMPLATE

RECOMMENDED PREINSTALLATION CHECK FOR THE 4800F SURFACE MOUNT STRIKE:

1. Determine that door is properly adjusted. Door must operate properly in order for system to provide best results.
2. Door must swing properly, without interfering with jamb or sill.
3. The door should be equipped with a door closer and the door closer "latch mode" must hold door in a completely closed position in order to avoid the lock latch from applying pressure against the releasing latch portion of the electric strike.
4. Electrical wire connections must be properly made and properly terminated inside the frame.
5. Confirm that the power line in the frame is the correct voltage, amperage, and that the switch works properly.
6. Confirm proper clearance exists between the end of the lock latch and jamb.
7. The electric door strike must be aligned properly with lock latch when it is installed on the doorjamb.
8. For best installation results, the door frame must be reasonably flat and straight.

Uneven Frame Soffit | Ideal Frame Soffit Flatness

TROUBLESHOOTING THE COMPLETED INSTALLATION:

SYMPTOM: ELECTRIC RELEASE IS NOT ACTUATING:

1. Verify proper voltage is present AT STRIKE. If voltage is present: the strike may have been affected during the installation, or dirt or debris may be preventing proper operation. Inspect electric release and clean. NOTE: DO NOT LUBRICATE SOLENOID.
2. If voltage is NOT present: A) Verify circuit breaker is on, B) Verify voltage at the transformer/power supply output. C) Verify that there are no additional, external switches or devices which may be interrupting your circuit. D) Check for damaged wiring or bad wire splices.

SYMPTOM: STRIKE IS WORKING BUT WILL NOT OPEN:

1. Check for other locks on door
2. Check for proper lock-latch engagement
3. Check for excessive back pressure on door release mechanism. Perform these steps:
   A) Push the door from the outside to try and release the latch pressure and actuate the 4800F. B) While the 4800F is unlatched swing the door open. If door opens, then the "latch mode" must hold door in a completely closed position in order to avoid the lock maybe applying pressure to the latch. Adjust the position of the 4800F to relieve the pressure.

POSSIBLE REMEDIES:

1. Remove door silencers. Re-center electric release in jamb. Remove or trim weather stripping around the door.
2. Installing the strike on an uneven surface can cause problems with the internal mechanism of this device. Specifically, it will cause localized mechanical pinching of the moving parts. Locate where the pinching is occurring and level the frame surface at that location. (FIG W)

V. 16.0226

Phone: (203) 730-1756
FAX: (203) 730-1781
2 Parklawn Dr., Suite F
Bethany, CT 06524
email: customerservice@trineonline.com
website: www.trineonline.com

4800F ELECTRIC STRIKE

USE THE 4850ITL TO QUICKLY MARK, TEST, ADJUST, CENTER PUNCH AND SKIP MOST OF THESE STEPS!

CHECK OUT THE VIDEO ON YouTube

TRINE ACCESS TECHNOLOGY
2 Parklawn Drive | Bethany | Connecticut | 06524

4850ITL

more info @ trineonline.com/4850itl.php

INSTALLATION PROCEDURE:

INSTALLATION INSTRUCTIONS

CAUTION: TO AVOID ELECTRICAL SHOCK AND INJURIES, BEFORE DOING YOUR WIRING, TURN OFF THE POWER FROM THE CIRCUIT BREAKER.

1. Mark the end position of the exit devices latchbolt on the doorframe. (Take off the original strike if present). See Figure 1.
2. Using the marks you just made as your guide, position the 4800F over the mark on the frame. Make sure that the Auxiliary latch rides up properly over the 4800F's edge, and is engaged, and that the door is in the fully closed position. See Figure 2
3. When you are confident with the position of the 4800F, mark two perpendicular edges of the 4800F on the frame See Figure 3
4. Put the 4800F aside for a moment and place the spacer supplied with the 4800F inside the marks you just made on the frame.
5. Using the spacer as a template; mark the two mounting holes and the wire exit hole. If you are using the optional anchor pins, mark the anchor pin positions using the spacer as a template. See Figure 4
6. Using a #7 bit, drill the two mounting holes and tap them ¼-20.
7. Using a ¾ inch diameter bit, drill the power wire exit hole
8. If you are utilizing the anchor pin system, use a #30 bit, drill the four anchor pin holes.
9. Deburr any sharp edges around the holes after drilling, so that the 4800F will rest on a smooth clean surface and the wires will not be accidentally cut or damaged while installing.
10. Pull the power wiring down the doorframe and through the ¾ inch diameter power wire hole
11. Using the provided sealed crimp connectors, terminate the quick connect socket assembly to the power wires. See Figure 5 (NOTE: The 4800F is not polarized)
12. If you intend to use the anchor pins system, insert them into the four holes on the back side of the 4800F. See Figure 6. If you also intend to use the 1/8" thick spacer plate, you can now slip the plate over the pins.
13. Snap together the power supply side connector coming off the frame to the 4800 connector. Carefully push the wires and connectors back into the frame.
14. Using the 2 mounting screws, mount the 4800F strike to the frame.
15. Adjust the strike to the desired position and tighten the mounting screws using the 3/16 inch Allen wrench.
16. Using the 3/32 inch Allen wrench turn the two setscrews on the side of the 4800F until they support the strike. DO NOT over tighten the setscrews.
17. Turn the power ON and test your installation. Installation is now complete.

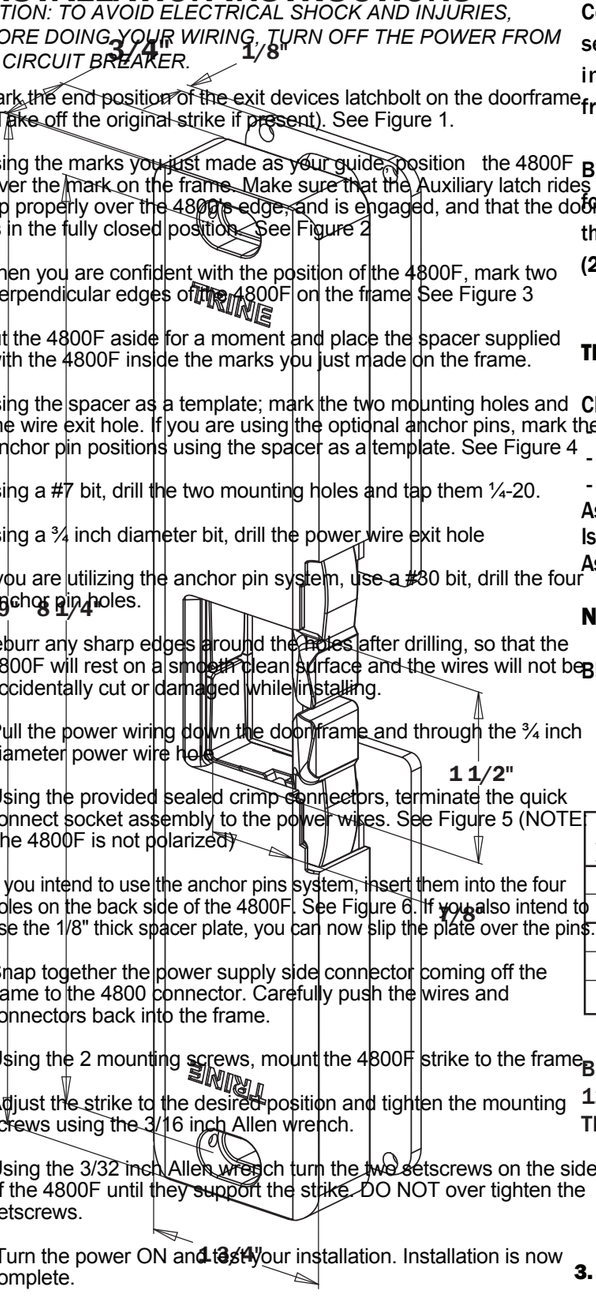

THE FIRE RATED SOLUTION FOR RIM PANIC EXIT DEVICES

Congratulations on the purchase of this quality TRINE security product. This product has been designed to install easily, perform reliably, and provide years of trouble free security.

BEFORE PROCEEDING with your installation, please review the following list of features. If you have any questions after reading this document please call TRINE's TECHNICAL SUPPORT (203) 730-1756, or visit us online @ trineonline.com

The 4800F is WH recognized for:

Class A, 3 hour single door / frame configuration
- UL10C, Fire Tests of Door Assemblies
- UBC 7-2, Uniform building Code
- CAN4 S104, Standard Method for Fire Tests of Door Assemblies NFPA 252
Issue: 1999/01/01 Standard Methods of Fire Tests of Door Assemblies

NOTE: WH fire listing is void when using fail safe action.

BHMA Grade 1 Electric Strike

Figure 1
With the door closed mark the position of the latchbolt on the frame.

Figure 2
Position the 4800F on the frame and mark the desire position.

Figure 3

Figure 4
Use the spacer as template to mark the holes you desire to use.

Figure 5
Crimp the quick connect socket assembly to the power wires.

Figure 6
Insert the anchor pins in the back of any 4800F series strike if you desire to use this

4800F ELECTRICAL CHARACTERISTICS:

Voltage	Pull-in/Hold Amps (A)	Duty	Sound
12DC	.566 A/.217A	Intm/Cont.	Silent
24DC	.253 A/.099 A	Intm/Cont.	Silent
12AC @ 50-60 Hz	.509 A/.181 A	Intm/Cont.	Silent
16AC @ 50-60 Hz	.405 A/.149 A	Intm/Cont.	Silent
24AC @ 50-60 Hz	.215 A/.087 A	Intm/Cont.	Silent

Built-in Electronics: The 48 atically allows 12-24AC & DC power plus surge and kickback protection. There are no external 'pacs' to use or install.

OPERATING TEMP RANGE: -20° and +65°C

DO NOT APPLY AN OVER VOLTAGE OF MORE THAN 10% OVER THE RATED OPERATING VOLTAGE OF THE STRIKE OR THE SOLENOID WILL BE DAMAGED

INSTRUCTIONS FOR CHANGING THE THE 4850 FROM FAIL SECURE TO FAIL SAFE:

To change the Fail Secure 4850 into a Fail Safe, open the mechanism side of the strike (as shown on the right) by removing the mechanism cover screws (3 places) and the cover. Lift the solenoid and gently pull off the solenoid plunger and BLUE spring assembly and replace it with the solenoid plunger and RED colored spring assembly. Pull off the actuator cam, and replace it with the fail-safe cam. Before closing the unit, make sure that the wires are properly seated on the wire channel (see figure on right). Save the plunger and BLUE colored spring assembly for future use.

For changing from Fail Safe to Fail Secure, just reverse the above procedure

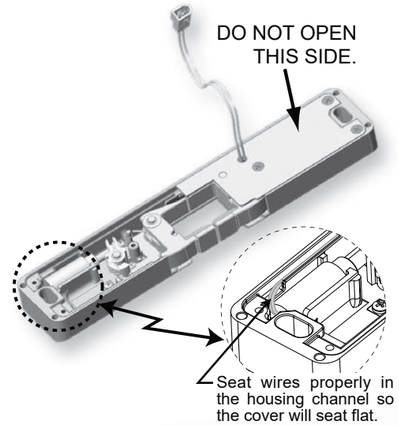

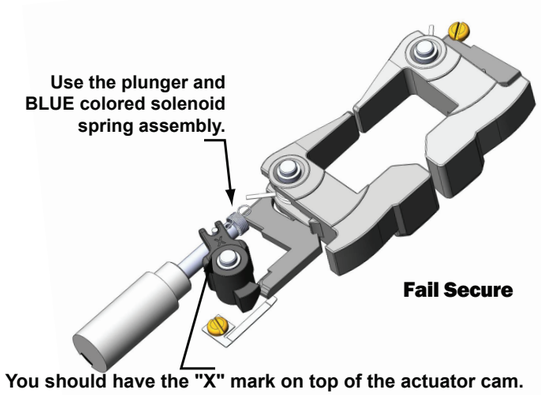

You should have the "X" mark on top of the actuator cam.

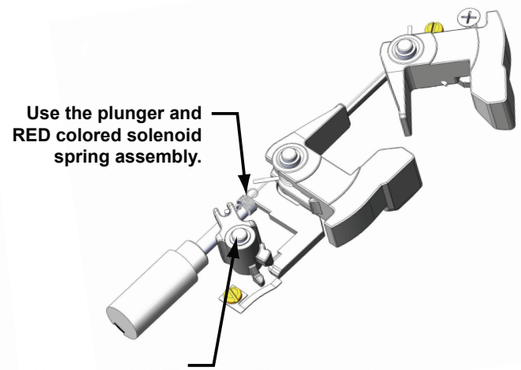

You should NOT see the "X" on top of the actuator cam.

TROUBLESHOOTING THE COMPLETED INSTALLATION:

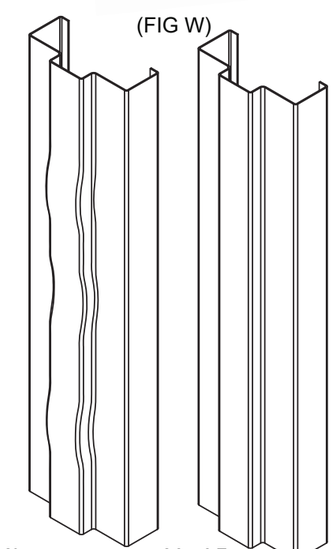

SYMPTOM: ELECTRIC RELEASE IS NOT ACTUATING:

1. Verify proper voltage is present AT STRIKE. If voltage is present: the strike may have been affected during the installation, or dirt or debris may be preventing proper operation. Inspect electric release and clean. NOTE: DO NOT LUBRICATE SOLENOID

2. If voltage IS NOT present:
A) Verify Circuit breaker is on, B) Verify voltage at the transformer/power supply output. C) Verify that there are no additional, external switches or devices which may be interrupting your circuit. D) Check for damaged wiring or bad wire splices.

SYMPTOM: STRIKE IS WORKING BUT WILL NOT OPEN:

1. Check for other locks on door
2. Check for proper lock-latch engagement
3. Check for excessive back pressure on door release latch by following these steps:
A) Push the door from the outside to try and relieve the bolt to latch pressure and actuate the 4800F. B) While the 4850 is unlatched swing the door open. If the door opens, then the bolt maybe applying pressure to the latch. Adjust the position of the 4850 to relieve the pressure.

POSSIBLE REMEDIES:
1. Re-adjust (or install) a door closer, Remove door silencers, Re-center electric release in jamb, Remove or trim weather stripping around the door.
2. Installing this strike on an uneven surface can cause problems with the internal mechanism of this device. Specifically, it will cause localized mechanical pinching of the moving parts. Locate where the pinching is occurring and level the frame surface at that location. (FIG W)

V. 17.0407

PHONE: (203) 730-1756
FAX: (203) 730-1781
2 Parklawn Dr., Suite F
Bethel, CT 06801
email: customerservice@trineonline.com
website: www.trineonline.com

4850 4850PoE/4850LCD ELECTRIC STRIKE

INSTALLATION INSTRUCTIONS

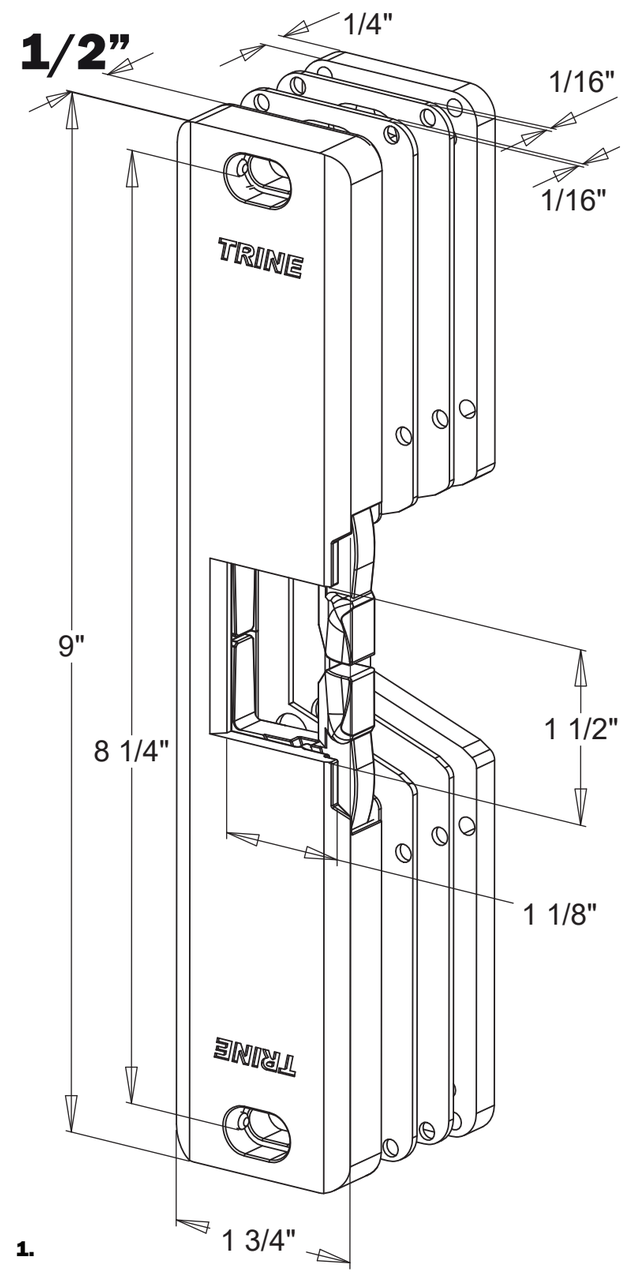

TRINE ACCESS TECHNOLOGY®
2 Parklawn Drive | Suite F | Bethel | Connecticut | 06801

TRINE 4850 - 1/2" THICK ELECTRIC THE ONE BOX SOLUTION FOR RIM PANIC EXIT DEVICES

Congratulations on the purchase of this quality TRINE security product. This product has been designed to install easily, perform reliably, and provide years of trouble free security.

BEFORE PROCEEDING with your installation, please review the following list of features. If you have any questions after reading this document please call TRINE's TECHNICAL SUPPORT **(203) 730-1756** , or visit us online @ **trineonline.com**

BHMA Grade 1 Electric Strike
- 1,000,000+ Life Cycles
- 1,500+ lbs Holding Force

Single Locking Mechanism

4850 THICKNESSES:
Combining the 1/8" spacer and 1/4" spacer the 4850's open cavity allows for multiple thicknesses: 1/2", 5/8", 3/4" and 7/8"

4850 ELECTRICAL CHARACTERISTICS:

Voltage	Pull-in/Hold Amps (A)	Duty	Sound
12DC	.500 A/.178 A	Intm/Cont.	Silent
16DC	.385 A/.131 A	Intm/Cont.	Silent
24DC	.255 A/.084 A	Intm/Cont.	Silent

Built-in Electronics: The 4850 automatically allows 12-24DC power, plus surge and kickback protection. There are no external 'pacs' to use or install.

4850PoE ELECTRICAL CHARACTERISTICS:

Voltage	Amps (A)	Duty	Sound
12DC	.260 A	Intm/Cont.	Silent

4850LCD ELECTRICAL CHARACTERISTICS:

Voltage	Amps (A)	Duty	Sound
24DC	.135 A	Intm/Cont.	Silent

DO NOT APPLY AN OVER VOLTAGE OF MORE THAN 10% OVER THE RATED OPERATING VOLTAGE OF THE STRIKE OR THE SOLENOID WILL BE DAMAGED.

DO NOT APPLY AC POWER OR THE SOLENOID WILL BE DAMAGED.

OPERATING TEMP RANGE: -20°C TO +65°C

WHAT IS INCLUDED IN THE 4850 BOX:

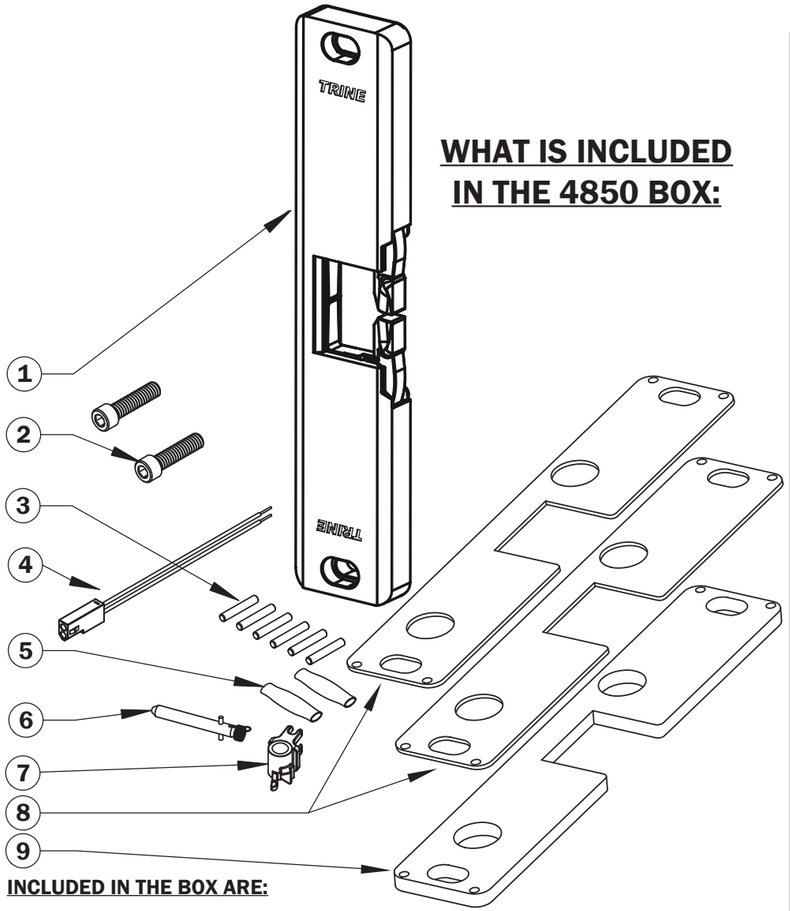

INCLUDED IN THE BOX ARE:

1 - (1) 4850 (OR 4850PoE/4850LCD) SURFACE MOUNTED STRIKE
2 - (2) 1/4-20 x 1" UH CAP SOCKET MOUNTING SCREWS
3 - (6) ANCHOR SYSTEM PINS
4 - (1) QUICK CONNECT SOCKET AND WIRE ASSEMBLY
5 - (2) SEALED CRIMP CONNECTORS
6 - (1) FAIL SAFE SPRING (RED COLORED) & SOLENOID PLUNGER
7 - (1) FAIL SAFE CAM
8 - (2) 1/16" THICK SPACER PLATES (replaces single 1/8" plate)
9 - (1) 1/4" THICK SPACER PLATE

RECOMMENDED PREINSTALLATION CHECK FOR THE 4850 SURFACE MOUNT STRIKE:

1. Determine that door is properly adjusted; Door must operate properly in order for system to provide best results.
2. Door must swing properly, without interfering with jamb or sill
3. The door should be equipped with a door closer and the door closer "latch mode" must hold door in a completely closed position in order to avoid the lock latch from applying pressure against the releasing latch portion of the electric strike.
4. Electrical wire connections must be completed and ready to be terminated inside the frame.
5. Confirm that the power line in the frame is the correct voltage, amperage, and that the switch works properly.
6. Confirm proper clearance exists between the end of the lock latch and jamb.
7. The electric door strike must be aligned properly with lock latch when it is installed on the doorjamb.
8. For best installation results, the door frame must be reasonably flat and straight.

RECOMMENDED TOOLS:

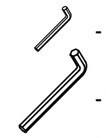

- 3/32 inch Allen Wrench

- 3/16 inch Allen Wrench

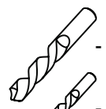

- 3/4 inch diameter Drill Bit

- #7 (0.201 inch diameter) Drill Bit

- #30 (0.128 inch diameter) Drill Bit (for the optional Anchor Pins)

- 1/4-20 Tap

- Drill

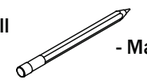

- Marker

WIRING FOR FAIL-SECURE MODE

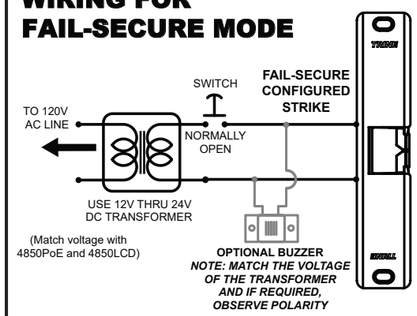

WIRING FOR FAIL-SAFE MODE

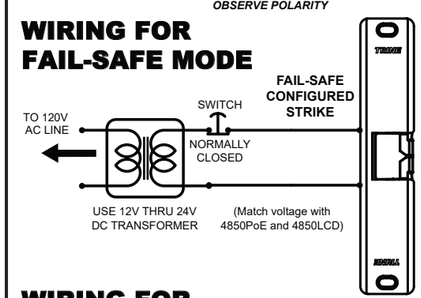

WIRING FOR FAIL-SAFE MODE *WITH OPTIONAL BUZZER*

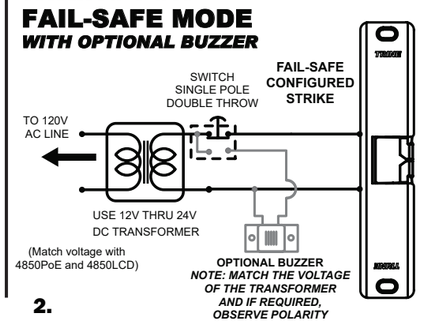

USE THE 4850ITL TO QUICKLY MARK, TEST, ADJUST, CENTER PUNCH AND SKIP MOST OF THESE STEPS!

CHECK OUT THE VIDEO ON YouTube
SEARCH "4850ITL"

more info @ trineonline.com/4850itl.php

INSTALLATION PROCEDURE:

CAUTION: TO AVOID ELECTRICAL SHOCK AND INJURIES, BEFORE DOING YOUR WIRING, TURN OFF THE POWER FROM THE CIRCUIT BREAKER.

1. Mark the end position of the exit devices latchbolt on the doorframe. (Take off the original strike if present). See Figure 1.
2. Using the marks you just made as your guide, position the 4850 over the mark on the frame. Make sure that the Auxiliary latch rides up properly over the 4850's edge, and is engaged, and that the door is in the fully closed position. See Figure 2
3. When you are confident with the position of the 4850, mark two perpendicular edges of the 4850 on the frame See Figure 3
4. Put the 4850 aside for a moment and place the spacer supplied with the 4850 inside the marks you just made on the frame.
5. Using the spacer as a template; mark the two mounting holes and the wire exit hole. If you are using the optional anchor pins, mark the anchor pin positions using the spacer as a template. See Figure 4
6. Using a #7 bit, drill the two mounting holes and tap them ¼-20.
7. Using a ¾ inch diameter bit, drill the power wire exit hole
8. If you are utilizing the anchor pin system, use a #30 bit, drill the four anchor pin holes.
9. Deburr any sharp edges around the holes after drilling, so that the 4850 will rest on a smooth clean surface and the wires will not be accidentally cut or damaged while installing.
10. Pull the power wiring down the door frame and through the ¾ inch diameter power wire hole.
11. Using the provided sealed crimp connectors, terminate the quick connect socket assembly to the power wires. See Figure 5 (NOTE: The 4850 is not polarized)
12. If you intend to use the anchor pins system, insert them into the 6 holes on the back side of the 4850. See Figure 6. If you also intend to use the 1/8" thick spacer plate, you can now slip the plate over the pins.
13. Snap together the power supply side connector coming off the frame to the 4850 connector. Carefully push the wires and connectors back into the frame.
14. Using the 2 mounting screws, mount the 4850 strike to the frame.
15. Adjust the strike to the desired position and tighten the mounting screws using the 3/16 inch Allen wrench.
16. Using the 3/32 inch Allen wrench turn the two setscrews on the side of the 4850 until they support the strike. DO NOT over tighten the setscrews.
17. Turn the power ON and test your installation. Installation is now complete.

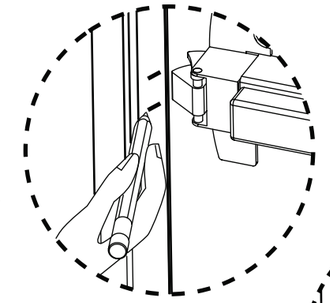

Figure 1
With the door closed, mark the position of the bolt on the frame.

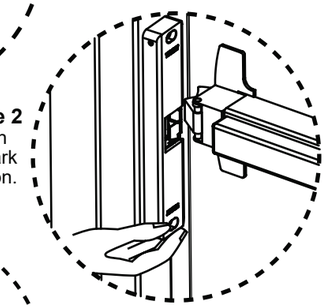

Figure 2
Position the 4850 on the frame and mark the desire position.

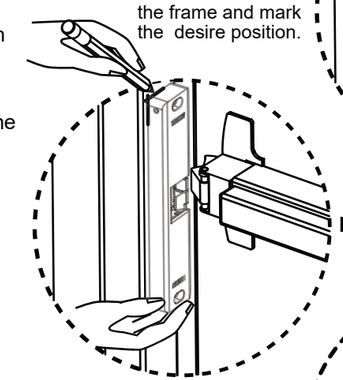

Figure 3

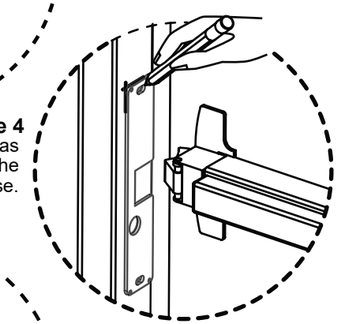

Figure 4
Use the spacer as template to mark the holes you desire to use.

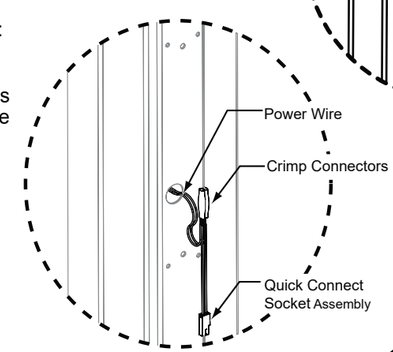

Figure 5
Crimp the quick connect socket assembly to the power wires.

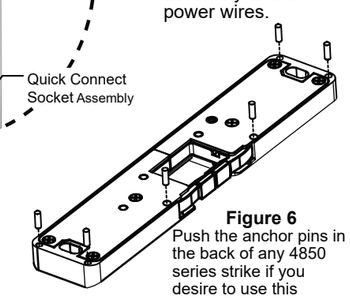

Figure 6
Push the anchor pins in the back of any 4850 series strike if you desire to use this

TRINE ACCESS TECHNOLOGY®
P: (203) 730-1756 – F: (203) 730-1781
www.trineonline.com

4850LB/4800FLB
SPECIFICATION AND INSTRUCTION SHEET

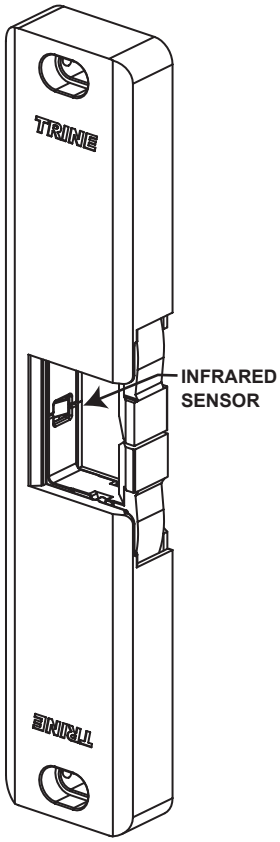

APPLICATION:

- Remote central station notification
- Local alarm monitoring
- Triggering video surveillance and recording systems
- Active relay for trap door systems
- For Indoor applications ONLY.

SENSOR WIRE COLOR CODE

POWER LEADS:

Red - Positive
Black - Negative

RELAY LEADS:

Blue - Common
Yellow - Normally Open (NO)
White - Normally Closed (NC)

TECHNICAL SPECIFICATIONS:

- SHARP® Infrared optical sensor
- Normally Open and Normally Closed contact terminals
- Single pole, double throw, Form "C" relay, rated at 1 Amp at 24 VAC or 24 VDC.
- Sensor Power - 12 through 30 VDC (ONLY)

FEATURES:

- Non-Mechanical operation
- Sensor is concealed within the unit
- Sensor does not require any adjustment
- Ignores ambient light, detecting radiant Infrared reflections off the pullman latch
- Increase life and decrease in maintenance due to electronic versus mechanical operation

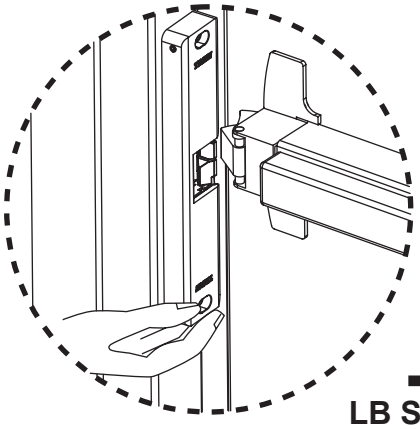

PREINSTALLATION CONSIDERATION:

When Mounting the 4800FLB, the pullman latch must be positioned as close as possible to the vertical center of the latch cavity. Having the latch on center will ensure that the sensor will have enough surface to detect.

You can use the 1/8" and 1/4" spacer (included, 1/4" is for 4850LB only) to move the 4850LB/4800FLB closer to the panic bar.

VOLTAGE	QUIESCENT CURRENT DRAW	TRIGGER CURRENT DRAW
12VDC	13mA	23mA
24VDC	20mA	35mA
30VDC	22mA	39mA

Spacer Plate

LB SENSOR WIRE TERMINAL COLOR CODING ASSIGNMENTS

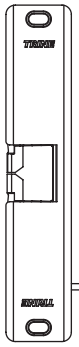

NOTE:

Please observe proper polarity for the LB sensor. The RED wire terminal must be attached to the POSITIVE side and the BLACK wire terminal must be attached to the NEGATIVE side.

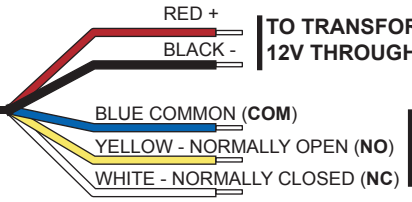

WIRING SCHEMATICS FOR TYPICAL APPLICATIONS

For an alarm system a Buzzer of Bell can be wired to the NO terminal such that when the door is open the Buzzer or Bell will sound.

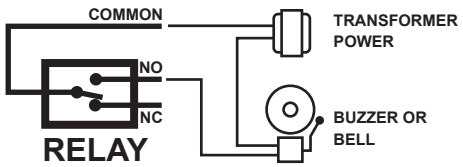

For a security system setup one side of the circuit can be connected to the common and the other side to the NC terminal so that when the door is open, the system senses the relay switch as open

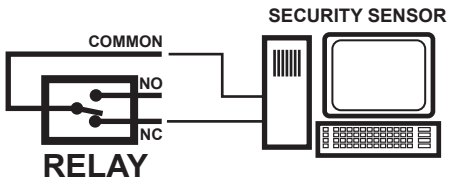

WIRING SCHEMATICS FOR DIFFERENT APPLICATIONS

FOUR WIRE SCHEMATIC UTILIZING ONE TRANSFORMER

This wiring arrangement uses the least amount of conductors between the Panel and the Frame.

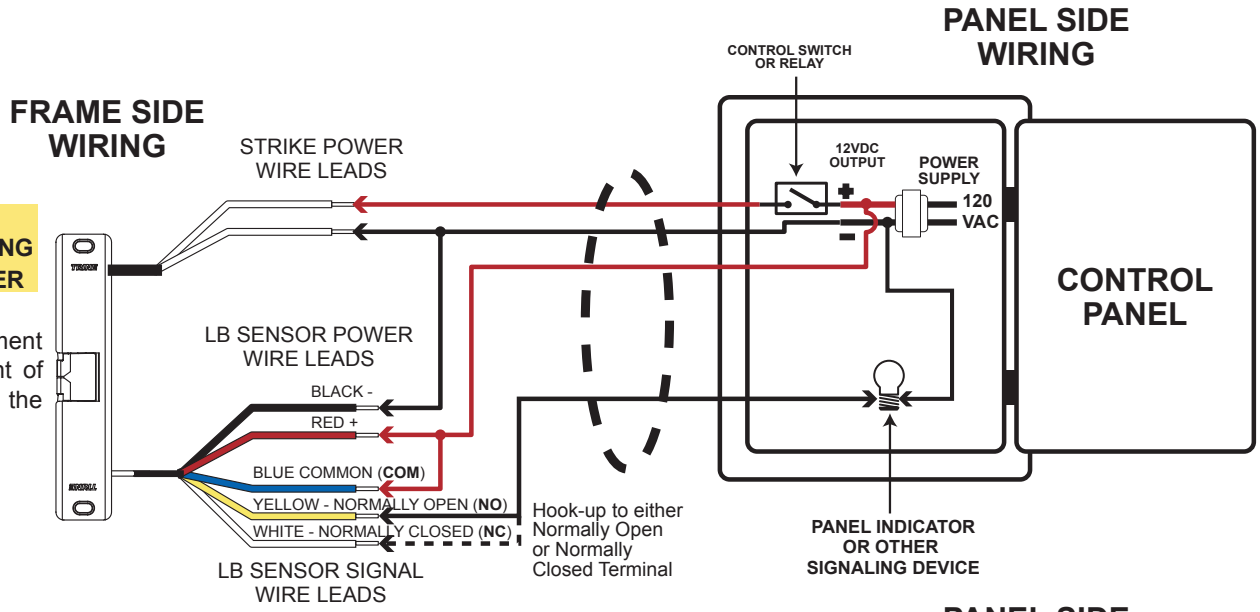

FIVE WIRE SCHEMATIC UTILIZING TWO TRANSFORMERS

If the Signaling Device or Panel Indicator requires a different voltage, this wiring scheme can be used.

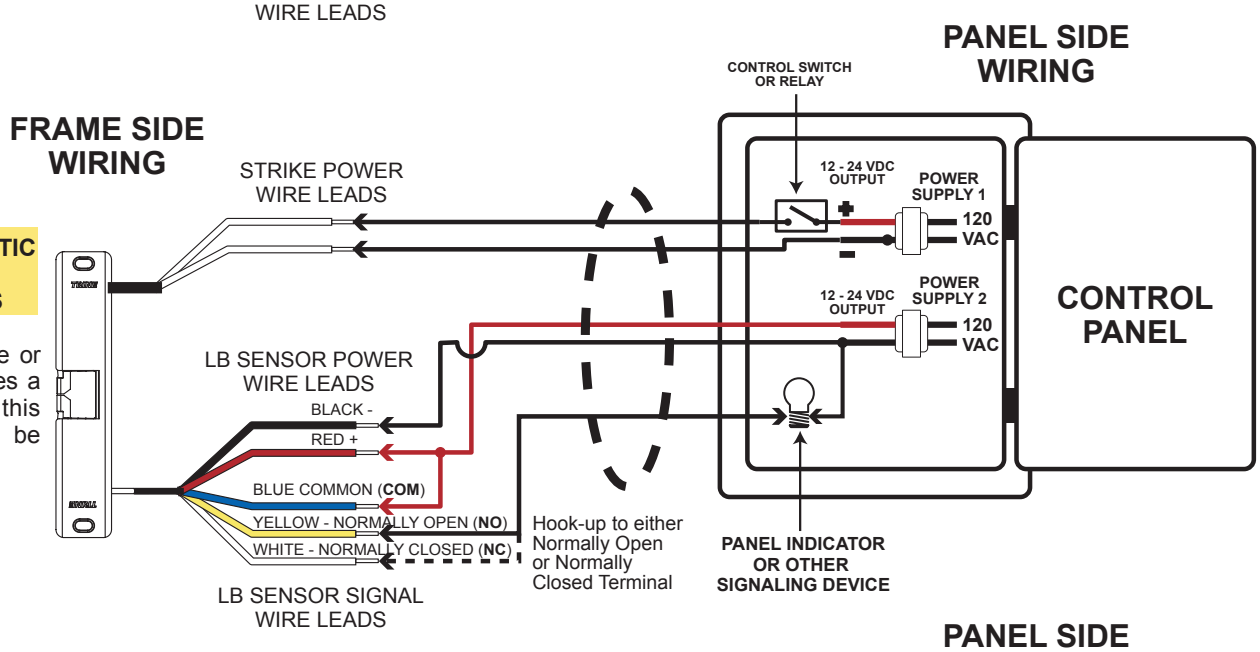

SIX WIRE SCHEMATIC UTILIZING THREE TRANSFORMERS

This wiring arrangement is used to isolate the strike operation, from the LB sensor power board and finally the Panel Indicator or Signaling Device.

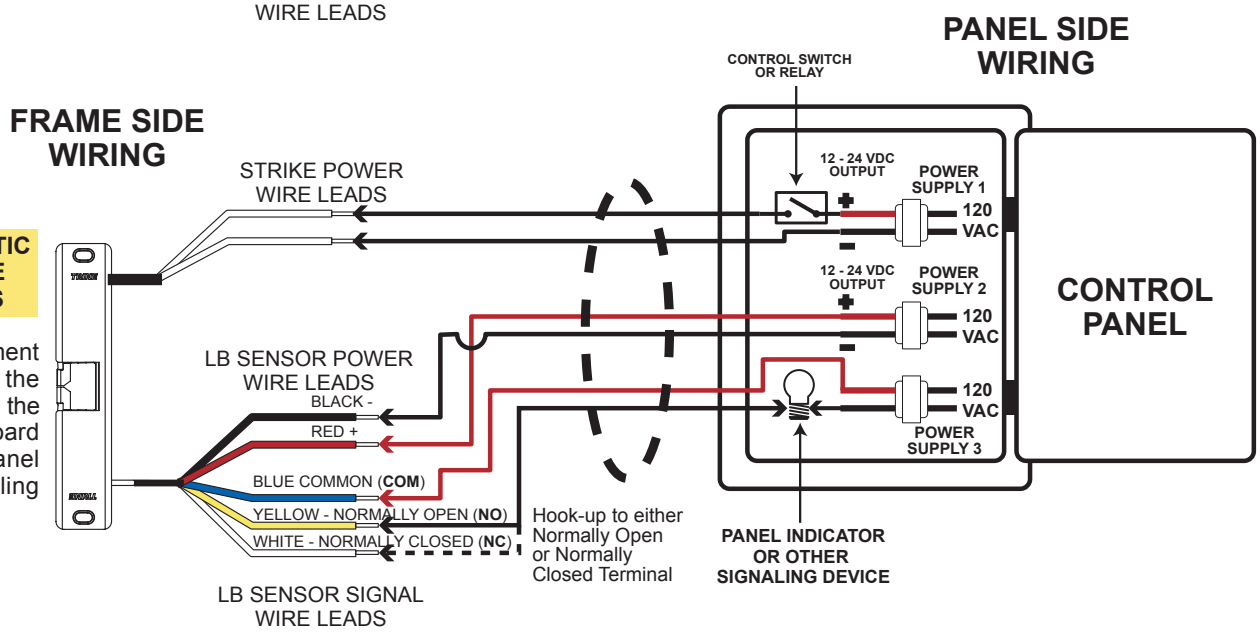

TRINE ACCESS TECHNOLOGY
1440 Ferris Place · Bronx · New York · 10461-3699

AXION PREMIUM ELECTRIC STRIKES

TRINE 3000 SERIES ELECTRIC RELEASES

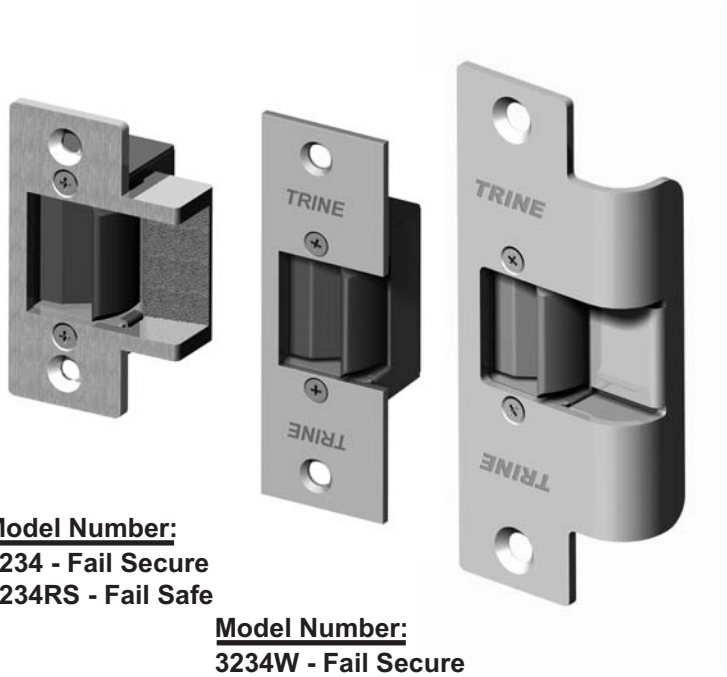

Model Number:
3234 - Fail Secure
3234RS - Fail Safe

Model Number:
3234W - Fail Secure
3234WRS - Fail Safe

Model Number:
3478 - Fail Secure
3478RS - Fail Safe

Congratulations on the purchase of this quality TRINE security product.

This product has been designed to install easily, perform reliably, and provide years of trouble free security.

In order for this product to fulfill its objectives, certain steps must be performed by the installer, and certain site conditions must be satisfied.

Before proceeding with your installation, please review the following list of items. If you have any questions first please finish reading this document to see if the information you require is contained in this document, otherwise please call:

TRINE TECH SUPPORT (718) 829-2332 EXT. 425,
or visit the TRINE Website www.TrineOnline.com.

The TRINE Model #3234, #3234W & Model #3478 are designed for new installation or retrofitting into metal, wood and aluminum door frames. Be sure that you have ordered the correct TRINE strike for your application.

STANDARD FEATURES

- Face Plate - 3234, 2-3/4" x 1-1/8"
  3234W, 3-3/4" x 1-1/4"
  3478, 4-7/8" x 1-1/4"
- Mortise Type - 1" backset (**Smallest in the Industry**)
- Durability - 500,000 Life Cycles
- Holding Force - 1,200 Pounds (Static Force)
  - 70 ft-lb (Dynamic Force)
- All stainless steel locking parts
- Solid Cast Latch - Stainless Steel
- Cavity: Width 5/8", Height 1-1/8", Depth 1/2"
- Non-handed
- Heavy-duty latch spring
- Silent Operation
- Intermittent Duty with the Standard versions
- Intermittent and Continuous Duty with the LC versions
- Micro Solenoid assembly
- Fail-Secure:(standard action) unlocks with power
- Fail-Safe: RS (reverse action) unlocks when power is off

	FINISHES		
	3234	3234W	3478
US3 (Polished Brass)	●	●	●
US4 (Satin Brass)	●	●	●
US10B (Dark Bronze)	●		●
US26 (Bright Chrome)			●
US26D (Satin Chrome)		●	
US32D (Satin Stainless Steel)	●		●

RECOMMENDED INSTALLATION SEQUENCE:

1. Verify strike is proper for the door into which it is to be installed.
2. Verify that you have all parts required to complete the installation.
3. Verify that the new electric release operates with the existing power supply/control circuit (retrofit applications); or verify that the new power supply/ control circuit operates the new electric release (new installations).
4. Locate and clearly mark the circuit breaker which provides ac power to your transformer/ power supply or that supplies power to the receptacle into which you will plug your transformer/power supply. This will enable you to safely cut power during installation, and permit troubleshooting if required.
5. Verify that the receptacle or circuit providing power to the electric release is not controlled by a wall switch, time clock, or other external device.
6. Verify that the circuit/receptacle used for the locking system is not powering any other equipment. Remember that interruption of power to your locking system could prevent access into the protected area, or jeopardize the security/safety of the site's occupants.
7. Verify that the door and associated components are in good working order.
8. Install electric release as per attached guidelines.
9. Wire electric release as per attached guidelines.
10. Perform final test of completed installation.

LUBRICATION: The TRINE Model #3234, #3234W & #3478 **do not require lubrication**. Lubricating these units will actually hamper their performance by attracting dust and debris into the tight tolerance precision Micro Solenoid assembly.

GETTING STARTED: Before proceeding with your installation, verify that the door to which the electric release is being applied is in good working condition.

These items are essential for either new installations or retrofits Items which should be specifically checked prior to beginning the installation include:

- The hinges (or pivots) are in good condition
- If your installation is a retrofit, that the existing latch lines up perfectly with the existing strike plate.
- The door is not rubbing on the saddle or anywhere on the frame
- The door closer is not leaking and is in good condition and properly adjusted.
- The door is not warped or otherwise damaged which might hamper its operation or otherwise affect your installation or the final system's performance.
- That the door frame member into which the door release is to be installed is deep enough (1 inch) for the body of the electric strike, and that the wiring to operate the electric release can be installed for your application.

HANDING: The TRINE Model #3234, #3234W and #3478 are **non-handed**.

DOOR HANDING GUIDE

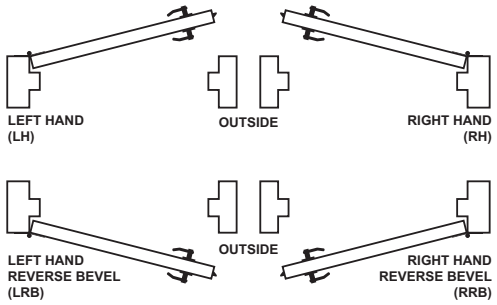

HANDING OF DOOR IS ALWAYS DETERMINED FROM THE OUTSIDE.

DUTY & VOLTAGES: The TRINE Model #3234, #3234W & Model #3478 are available as FAIL-SECURE (Normally Locked, Power to Unlock), INTERMITTENT DUTY and are supplied in two different operating voltage and the **LC VERSION**, suitable for use in a range of voltages from 12V to 24V AC or DC. The TRINE Model #3234RS, 3234WRS & Model #3478RS are FAIL-SAFE (Normally Unlocked, Power to Lock), continuous duty and are supplied with LC module.

LC units will operate on any input voltage from 12V to 24V AC or DC, and offer both the benefits of reducing inventory by enabling you to stock one strike. ***In addition, they offer both surge suppression and inductive kickback protection.***

Please refer to the accompanying VOLTAGE DROP CHART for recommended wire gauges for various voltages and wire lengths.

VOLTAGE DROP GUIDE		
Length to Transformer	**12V**	**24V**
Up to 50 feet	18 AWG	20 AWG
50 to 150 feet	16 AWG	18 AWG
150 to 300 feet	14 AWG	16 AWG
300 to 600 feet	12 AWG	14 AWG

The TRINE MODEL # 3234, #3234W and #3478:
FAIL-SECURE "INTERMITTENT DUTY" units are designed for momentary application of voltage for access control purposes, and cannot be continuously powered without permanent and irreversible damage to the electric strike's solenoid.

The TRINE MODEL #3234-RS, #3234W-RS and #3478-RS:
FAIL-SAFE "CONTINUOUS DUTY" versions may be used for applications where the release must remain UNLOCKED for extended periods. Please contact TRINE for other additional TRINE electric release solutions for those applications requiring a continuous duty FAIL-SECURE electric release that may be powered for extended periods, commonly referred to as CONTINUOUS DUTY.

The TRINE **LC version** of MODEL # 3234, 3234W, #3478, # 3234-RS, #3234W-RS and #3478-RS can be used for "INTERMITTENT DUTY" AND "CONTINUOUS DUTY"

3000 SERIES ELECTRICAL CHARACTERISTICS CHART:

STANDARD MODELS

VOLTAGE	CURRENT (AMPS)	COIL RESISTANCE (OHMS)	DUTY	AUDIBLE SOUND	WIRE COLOR	MODEL
12V DC	0.480	25	Int	Silent	Blue-Blue	STD
24V DC	0.240	100	Int	Silent	White-White	STD

LC & RS MODELS

VOLTAGE	CURRENT (AMPS) PULL-IN/HOLDING	COIL RESISTANCE (OHMS)	DUTY	AUDIBLE SOUND	WIRE COLOR	MODEL
12V DC	0.743/0.298	13	Int./Cont.	Silent	Red-Red	LC
12V AC	0.715/0.277	13	Int./Cont.	Silent	Red-Red	LC
24V DC	0.397/0.170	13	Int./Cont.	Silent	Red-Red	LC
24V AC	0.378/0.173	13	Int./Cont.	Silent	Red-Red	LC

ELECTRICAL: If you are performing a new installation, be certain that you make provisions for the proper voltage power supply for your electric strike. If you are performing a retrofit type installation, determine that the voltage present at the location of the strike is appropriate for the TRINE strike you have, that the circuitry supplying the voltage is operating properly, and also verify that you are able to cut the power completely to the door location so that you may perform the installation safely without endangering yourself or causing damage to the power supply or other devices connected to the circuit. It is strongly recommended that you also test for high voltages which may exist between each lead of the power wiring to the electric release solenoid, and to the door frame which is an earth ground. Dangerous voltages or currents may occur due to a miswire or other pre-existing fault conditions in the system you are servicing.

TESTING YOUR ELECTRIC STRIKE; POWER SUPPLY; & SWITCHING CIRCUIT PRIOR TO FINAL MOUNTING OF THE ELECTRIC RELEASE IS RECOMMENDED

POWER SOURCES:

The TRINE MODEL #5208 (12 VDC) or MODEL # 5209 (24 VDC) are suitable DC POWER SUPPLIES which are plug-in and therefore do not require that the installer perform line voltage wiring.
TRINE offers several low voltage transformers suitable for use with the TRINE MODEL #3234, #3234W & #3478 electric releases.

HARDWIRED POWER SUPPLY MODELS are also available - see our website or call our Customer Support Line for details.

SILENT OPERATION: The TRINE #3234, #3234W & #3478 are referred to as "Silent Operating"; unlike some types of AC electric releases which make a "buzzing sound" when activated. For some applications, such as entrances into apartment buildings or storerooms, an audible sound is desirable, and even expected. For other applications, such as offices, silent operation is preferred because a buzzing sound is distracting or disturbing. Verify with your client which they require, and if an audible signal when the electric release is activated is desirable, then add a sounding device as shown in the accompanying wiring diagrams.

CONFIRMING PROPER LOCK-LATCH ENGAGEMENT & CLEARANCES:
The latch and the lock must engage properly for the electric strike to operate as intended. On doors where the gap between the edge of the door and the jamb are within standard tolerances and the latch is the proper length, no adjustments will be required and this is true for the majority of installations.

But too little lock-latch engagement will result in an installation were the door may be easily spread; allowing the locked door to be forced open.

Too much lock-latch engagement will result in a situation where the door release will interfere with the door latch, causing binding; improper operation and premature mechanical wear on the latch and release.

Extended latch length (LL) minus the gap (G) between the edge of the door and the edge of the jamb equals the amount of lock-latch engagement.

"Lock-Latch Engagement = LL - G"

INSTALLATION OF SHIM:
An adequate amount of clearance must exist between the door latch and the strike keeper so that they do not interfere or bind when the door opens or closes. Two 1/16" thick shims are supplied with the TRINE #3234, #3234W and #3478 which may be installed as shown in the "Installation Drawings section" to resolve this situation if this problem is encountered. (also See Figure 4 below).

FIGURE 4

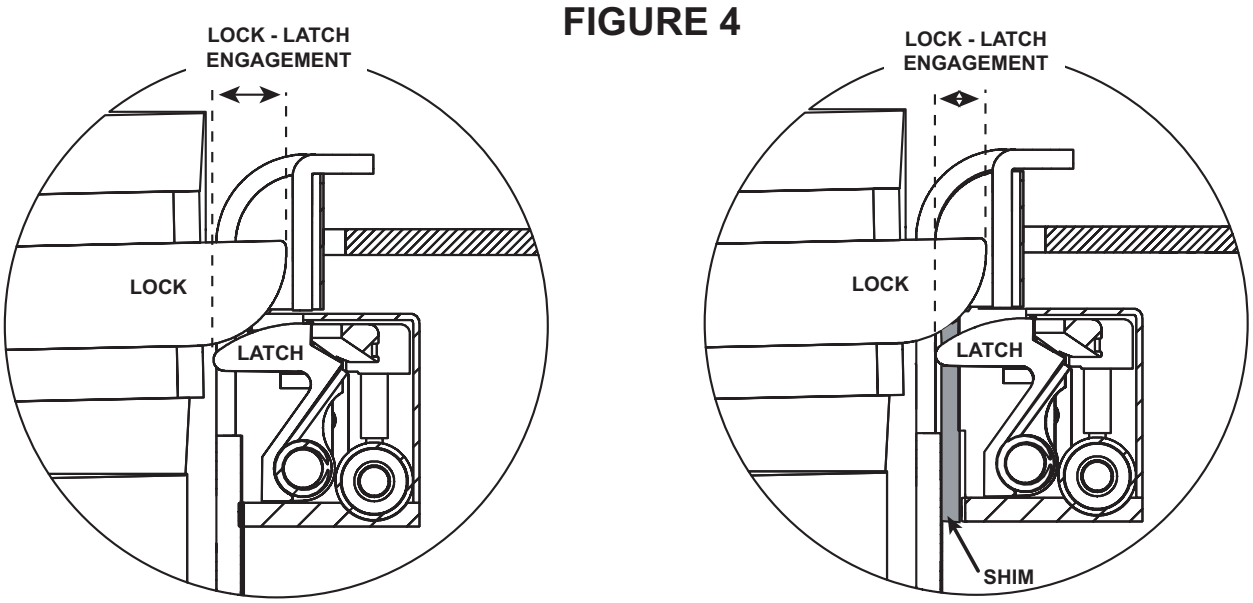

METAL AND WOOD FRAME INSTALLATION

The 3478's 4-7/8" x 1-1/4" faceplate requires the least amount of jamb preparation when compared with other electric strikes.

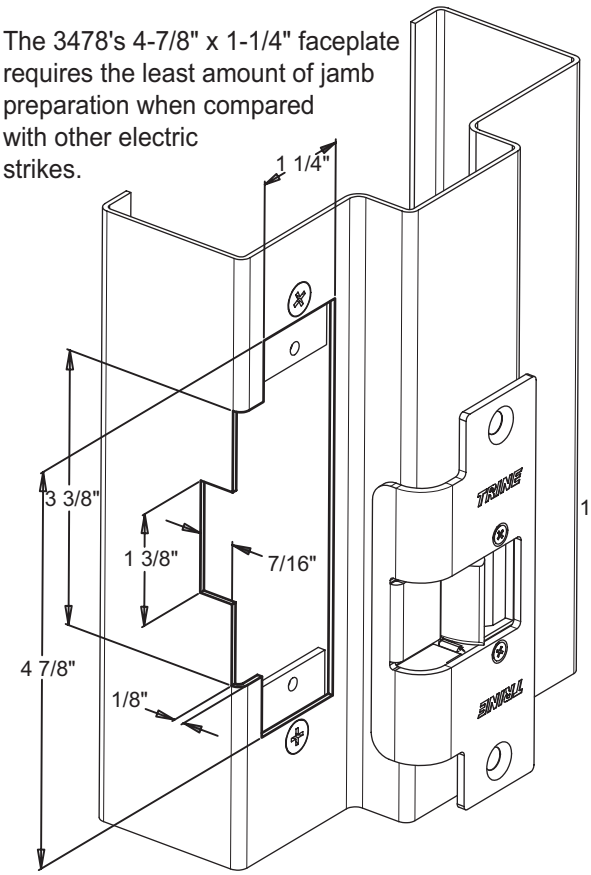

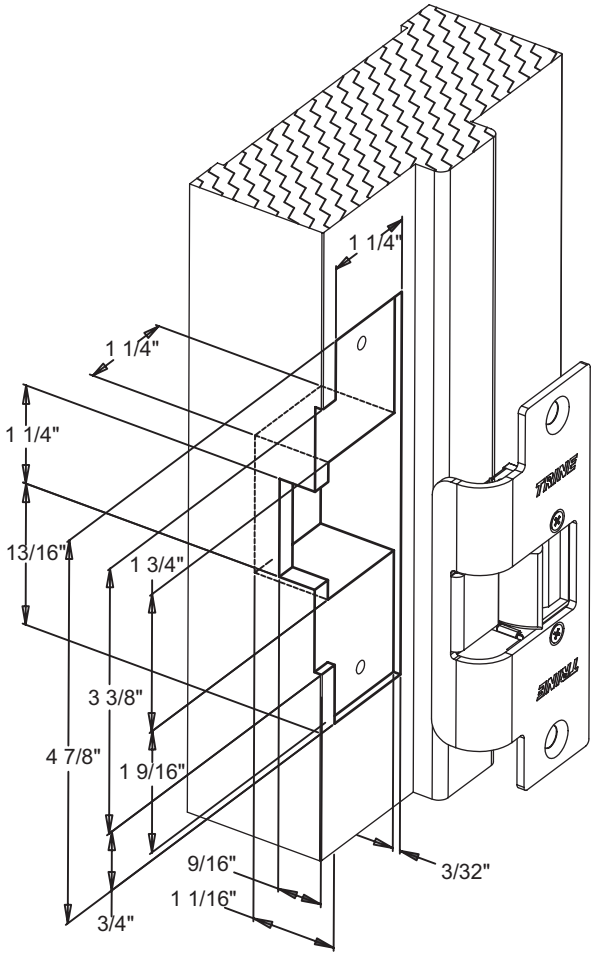

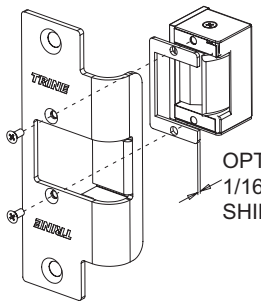

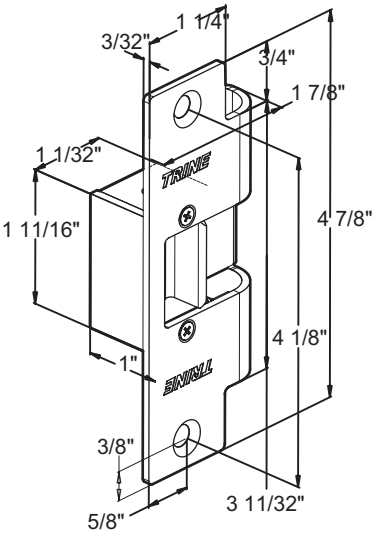

WOOD FRAME INSTALLATION

The 3234W's 3-3/4" x 1-1/4" faceplate requires the least amount of jamb preparation when compared with other electric strikes.

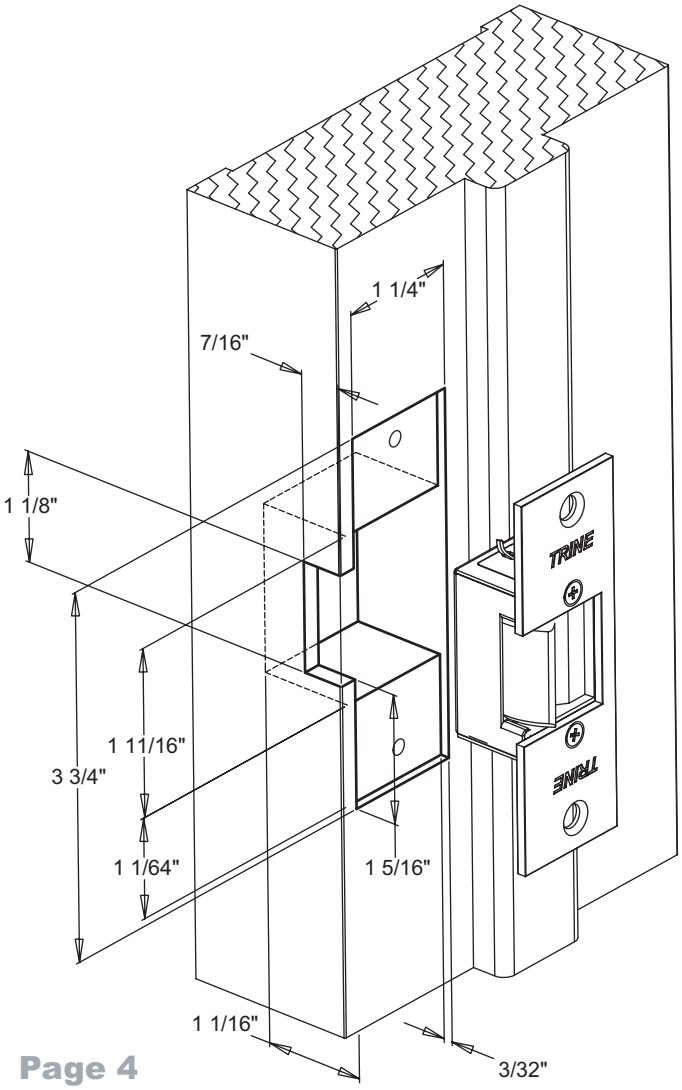

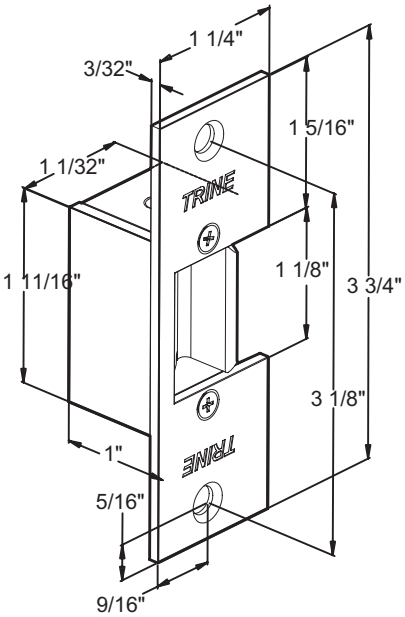

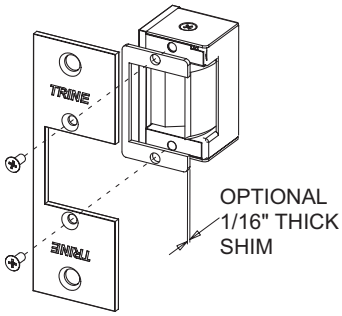

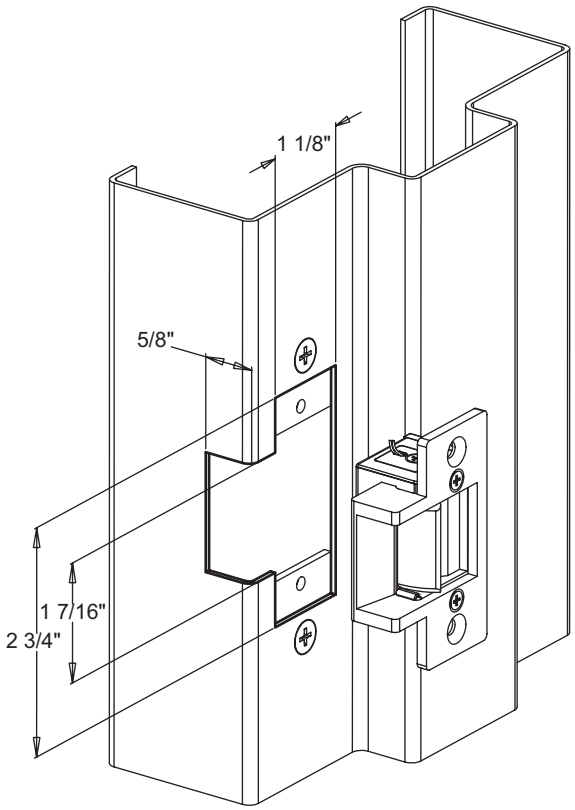

METAL FRAME INSTALLATION

The 3234's 2-3/4" x 1-1/4" faceplate requires the least amount of jamb preparation when compared with other electric strikes.

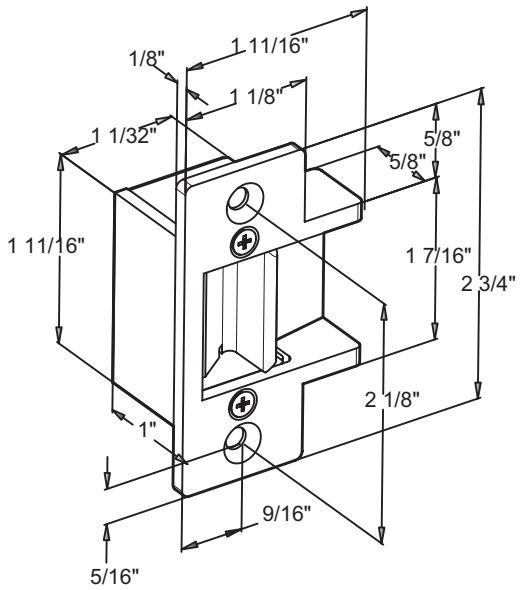

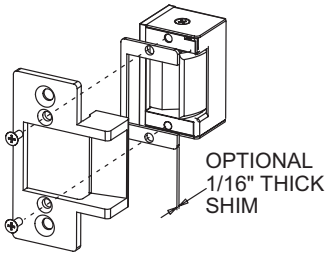

WIRING DIAGRAM

FIGURE 1
USING DC TRANSFORMER

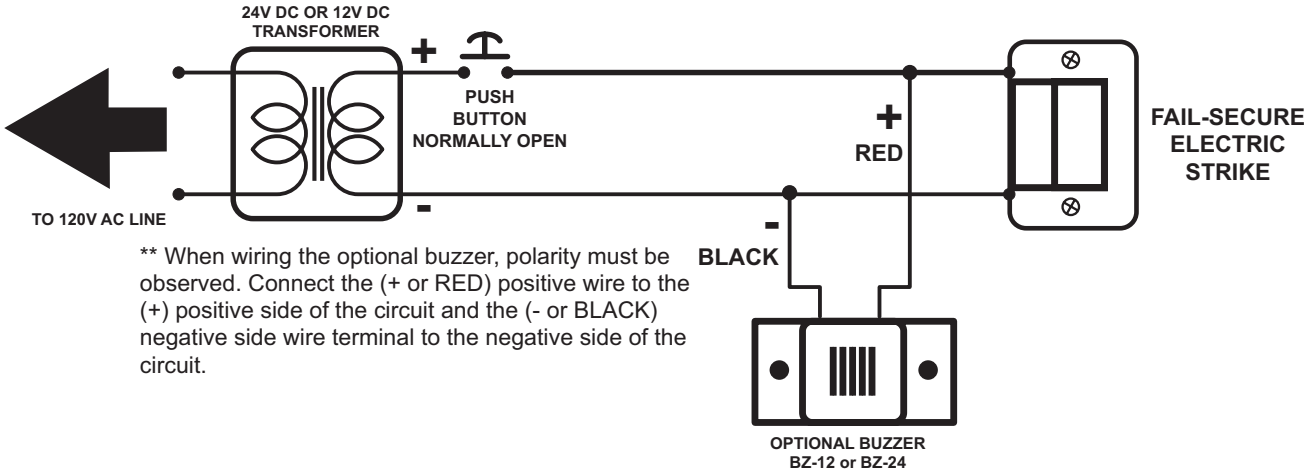

** When wiring the optional buzzer, polarity must be observed. Connect the (+ or RED) positive wire to the (+) positive side of the circuit and the (- or BLACK) negative side wire terminal to the negative side of the circuit.

FIGURE 2
FAIL-SAFE MODELS

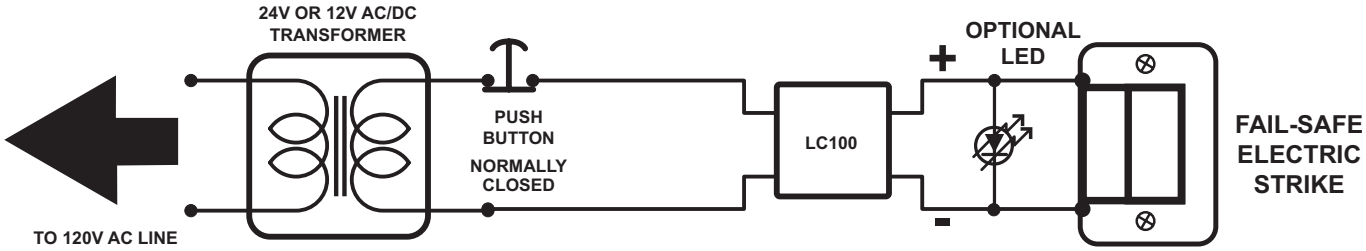

FIGURE 3
USING AC TRANSFORMER

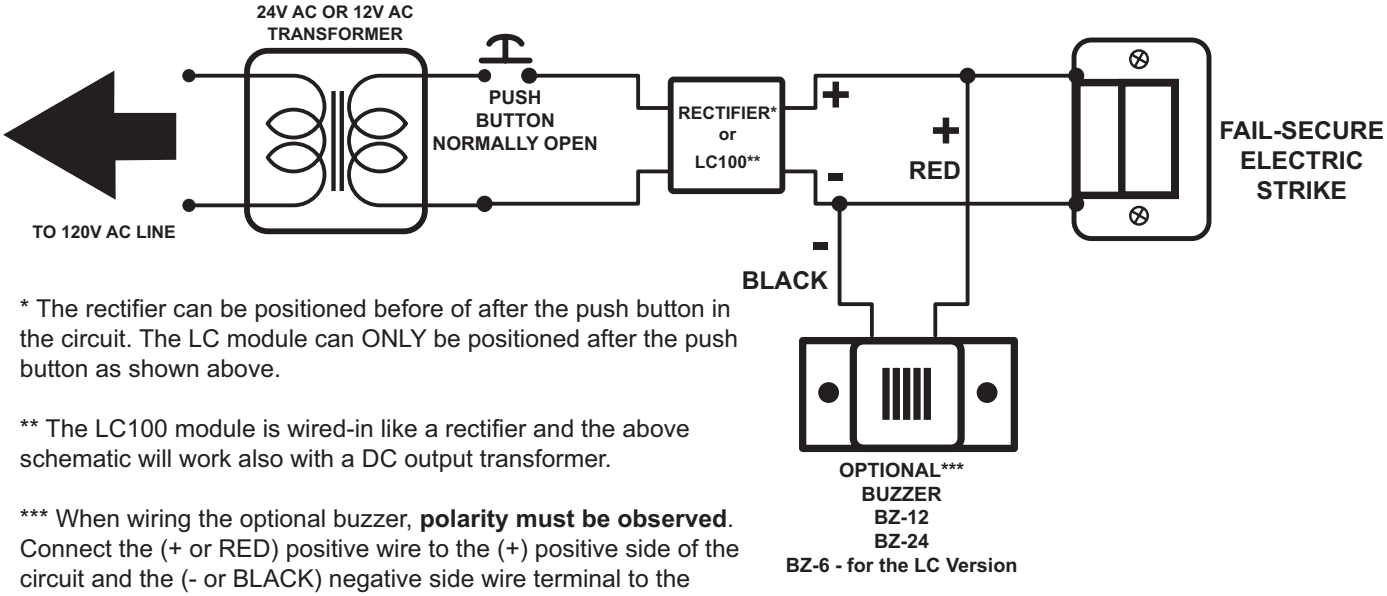

* The rectifier can be positioned before of after the push button in the circuit. The LC module can ONLY be positioned after the push button as shown above.

** The LC100 module is wired-in like a rectifier and the above schematic will work also with a DC output transformer.

*** When wiring the optional buzzer, **polarity must be observed**. Connect the (+ or RED) positive wire to the (+) positive side of the circuit and the (- or BLACK) negative side wire terminal to the negative side of the circuit.

TROUBLESHOOTING THE COMPLETED INSTALLATION:

SYMPTOM: Electric release is not actuating:

1. **Verify proper voltage is present AT STRIKE. If voltage IS present: the strike may have been damaged during the installation, or dirt or debris may be preventing proper operation.**
2. **Verify for proper electric release coil resistance (REFER TO COIL ESISTANCE CHART), for either a short circuit or open circuit. Coil is NOT a serviceable part. Note that intermittent coils can only receive power for 1 minute or less.**
3. **If voltage IS NOT present:**
   - **Verify Circuit breaker is on**
   - **Verify voltage at the transformer/power supply output.**
   - **Verify output from rectifier (if used)**
   - **Verify that there are no additional, unknown external switches or devices which may be interrupting your circuit.**
   - **Check for damaged wiring or bad wire splices.**

SYMPTOM: Door will not open but strike is working

- **Check for other locks on door**
- **Check for proper lock-latch engagement (SEE SECTION: "CONFIRMING PROPER LOCK-LATCH ENGAGEMENT & CLEARANCES").**
- **Lock latch engagement may be not set correctly. (If proper clearance cannot be achieved by installing a shim; a shorter lock latch may be required for your installation.)**
- **Check for excessive backpressure on door release latch by following these steps:**
  While observing the electric release and latch; apply enough pressure on the door so that the lock's latch does not press on the electric release's latch. If applying pressure as described does not cause any movement of the lock away form the latch, then there may be too much pressure on the electric release's latch. If electric release works properly while you are applying this pressure, then steps must taken to relieve this pressure. Possible remedies include:
  - **Re-adjust (or install) a door closer**
  - **Remove door silencers**
  - **Correct excessive door warpage**
  - **Re-center electric release in jamb**
  - **Remove or trim weather stripping around the door**

TRINE ACCESS TECHNOLOGY
PHONE: (718) 829-2332 FAX: (718) 829-6405
1440 FERRIS PLACE
BRONX, NY 10461
email: CustomerService@TrineOnline.com
website: www.TrineOnline.com

TRINE ACCESS TECHNOLOGY
1440 Ferris Place • Bronx • New York • 10461-3699

AXION PREMIUM ELECTRIC STRIKES

TRINE 3000 SERIES ELECTRIC RELEASES:

Congratulations on the purchase of this quality TRINE security product.
This product has been designed to install easily, perform reliably, and provide years of trouble free security.

In order for this product to fulfill its objectives, certain steps must be performed by the installer, and certain site conditions must be satisfied.

Before proceeding with your installation, please review the following list of items. If you have any questions first please finish reading this document to see if the information you require is contained in this document, otherwise please call TRINE TECH SUPPORT (718) 829-2332 EXT. 425, or visit the TRINE Website www.TrineOnline.com.

Both the TRINE Model #3258 & Model #3458 are designed for new installation or retrofitting into Aluminum frames. Be sure that you have ordered the correct TRINE strike for your application.

STANDARD FEATURES:

- Face Plate - 3258, 2-5/8" x 5/8" - **Non-Handed**
  3458, 4-5/8" x 1-9/16" - **Must order LH or RH**

- All stainless steel locking components
- Fail-Secure:(standard action) unlocks with power applied (MODELS #3258 & #3458)
- Fail-Safe: RS (reverse action) unlocks when power is off (MODELS #3258RS & MODELS #3458RS)
- Mortise Type - 1" backset (Smallest in the Industry)
- Durability - 500,000 Life Cycles
- Holding Force - 1,200 Pounds
- Latch Cavity: Width 5/8", Height 1-1/8", Depth 1/2"
- Handed - The 3258 is non-handed. The 3458 is handed, LH for left hand or RH for right hand
- Heavy-duty latch spring
- Silent Operation
- Intermittent Duty
- Micro Solenoid assembly
- Low current draw

FINISHES:

Satin Stainless Steel - US32D (3458 ONLY)
Satin Chrome - US26D (3258 ONLY)
Dark Bronze - US10B
Bright Chrome - US26

RECOMMENDED INSTALLATION SEQUENCE:

1. Verify strike is proper for the door into which it is to be installed.
2. Verify that you have all parts required to complete the installation.
3. Verify that the new electric release operates with the existing power supply/control circuit (retrofit applications); or verify that the new power supply/ control circuit operates the new electric release (new installations).
4. Locate and clearly mark the circuit breaker which provides ac power to your transformer/ power supply or that supplies power to the receptacle into which you will plug your transformer/power supply. This will enable you to safely cut power during installation, and permit troubleshooting if required.
5. Verify that the receptacle or circuit providing power to the electric release is not controlled by a wall switch, time clock, or other external device.
6. Verify that the circuit/receptacle used for the locking system is not powering any other equipment. Remember that interruption of power to your locking system could prevent access into the protected area, or jeopardize the security/safety of the site's occupants.
7. Verify that the door and associated components are in good working order.
8. Install electric release as per attached guidelines.
9. Wire electric release as per attached guidelines.
10. Perform final test of completed installation.

Be sure that you have ordered the correct TRINE strike for your application.

LUBRICATION: The TRINE Model #3258 & Model #3458 do not require lubrication. Lubricating these units will actually hamper their performance by attracting dust and debris into the tight tolerance precision Micro Solenoid assembly

GETTING STARTED: Before proceeding with your installation, verify that the door to which the electric release is being applied is in good working condition.

These items are essential for either new installations or retrofits Items which should be specifically checked prior to beginning the installation include:

- The hinges (or pivots) are in good condition
- If your installation is a retrofit, that the existing latch lines up perfectly with the existing strike plate.
- The door is not rubbing on the saddle or anywhere on the frame
- The door closer is not leaking and is in good condition and properly adjusted.
- The door is not warped or otherwise damaged which might hamper its operation or otherwise affect your installation or the final system's performance.
- That the door frame member into which the door release is to be installed is deep enough (1 inch) for the body of the electric strike, and that the wiring to operate the electric release can be installed for your application.

FOR RETROFITS:
With only a minimal modification to the frame the Model #3258 is the ideal replacement for the ADAMS-RITE® #4502 Strike; (Use with Adams-Rite Model 4510, 4710 or 4750 dead latches)

With only a minimal modification to the frame the Model #3458 is the ideal replacement for the ADAMS-RITE® #4730/4501 Strike plate.

For both the TRINE #3258 & #3458 retrofits, these strikes are designed so that the original mounting tab holes may be used to secure the electric release into the frame.

Mounting Tabs are supplied with both units for use in new or retrofit installations.

HANDING: The TRINE Model #3458 is NOT field handable. Verify that you have ordered the correct handed door release for your application. The TRINE Model #3258 is NONE handed.

DOOR HANDING GUIDE

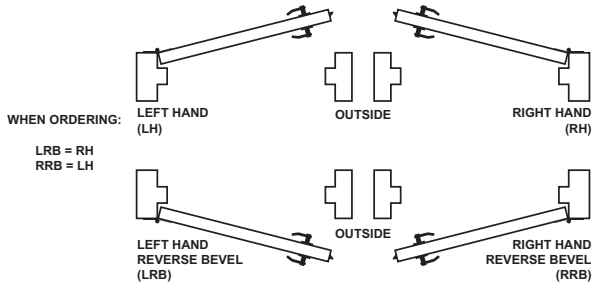

HANDING OF DOOR IS ALWAYS DETERMINED FROM THE OUTSIDE.

DUTY & VOLTAGES: The TRINE Model #3258 & Model #3458 are available as FAIL-SECURE (Normally Locked, Power to Unlock), INTERMITTENT DUTY and are supplied in two different operating voltages and the LC Version, suitable for use in a range of voltages from 12V AC/DC to 24V AC/DC. The TRINE Model #3258RS & Model #3458RS are FAIL-SAFE (Normally Unlocked, Power to Lock), CONTINUOUS DUTY and are supplied only in LC Version.

3000 Series Electrical Characteristics Chart					
Voltage	Current (Amps)	Resistance (Ohms)	Audible Sound	Solenoid Duty	Wire Color
12V DC	0.480	25	None	Intermittent	Blue - Blue
24V DC	0.240	100	None	Intermittent	White - White
LC Version	0.200	12.5	None	Intermittent/Continuous	Red - Red
RS Version	0.200	12.5	None	Intermittent/Continuous	Red - Red

LC units will operate on any voltage from 12V to 24V AC or DC, and offer surge suppression and inductive kickback protection. In addition, they offer the benefits of reducing inventory by enabling you to stock one strike.
Please note, as indicated on the unit, the LC module must be positioned within 15 feet of the electric strike.

Please refer to the accompanying VOLTAGE DROP CHART for recommended wire gauges for various VOLTAGES & WIRE LENGTHS.

VOLTAGE DROP GUIDE		
Length to Transformer	12V	24V
Up to 50 feet	18 AWG	20 AWG
50 to 150 feet	16 AWG	18 AWG
150 to 300 feet	14 AWG	16 AWG
300 to 600 feet	12 AWG	14 AWG

The TRINE MODEL # 3258 and Model #3458 FAIL-SECURE "INTERMITTENT DUTY" units are designed for momentary application of **less than a minute** of voltage for access control purposes, and cannot be continuously powered without permanent and irreversible damage to the electric strike's solenoid.

The TRINE MODEL # 3258RS and Model #3458RS FAIL-SAFE "CONTINUOUS DUTY" versions may be used for applications where the release must remain UNLOCKED for extended periods or when required by code.

The TRINE LC version of MODEL # 3258, #3458, # 3258RS and #3458RS can be used for "INTERMITTENT DUTY" AND "CONTINUOUS DUTY"

ELECTRICAL: If you are performing a new installation, be certain that you make provisions for the proper voltage power supply for your electric strike. If you are performing a retrofit type installation, determine that the voltage present at the location of the strike is appropriate for the TRINE strike you have, that the circuitry supplying the voltage is operating properly, and also verify that you are able to cut the power completely to the door location so that you may perform the installation safely without endangering yourself or causing damage to the power supply or other devices connected to the circuit. It is strongly recommended that you also test for high voltages which may exist between each lead of the power wiring to the electric release solenoid, and to the door frame which is an earth ground.

Dangerous voltages or currents may occur due to a miswire or other pre-existing fault conditions in the system you are servicing.

TESTING YOUR ELECTRIC STRIKE; POWER SUPPLY; & SWITCHING CIRCUIT PRIOR TO FINAL MOUNTING OF THE ELECTRIC RELEASE IS RECOMMENDED

POWER SOURCES:

The TRINE MODEL #5208 (12 VDC) or MODEL # 5209 (24 VDC) are suitable DC POWER SUPPLIES which are plug-in and therefore do not require that the installer perform line voltage wiring.
TRINE offers several low voltage transformers suitable for use with the TRINE MODEL #3258 & #3458 electric releases.

For 12 Volt door releases; use the TRINE #5204 PLUG-IN AC LOW VOLTAGE TRANSFORMER and MODEL SR-1 SILICON RECTIFIER

For 24 Volt door releases; use the TRINE #5201 PLUG-IN AC LOW VOLTAGE TRANSFORMER and TRINE #SR-1 SILICON RECTIFIER

HARDWIRED POWER SUPPLY MODELS are also available - see our website or call our Customer Support Line for details.

SILENT OPERATION: The TRINE #3258 & #3458 are referred to as "Silent Operating"; unlike some types of AC electric releases which make a "buzzing sound" when activated. For some applications, such as entrances into apartment buildings or storerooms, an audible sound is desirable, and even expected. For other applications, such as offices, silent operation is preferred because a buzzing sound is distracting or disturbing. Verify with your client which they require, and if an audible signal when the electric release is activated is desirable, then add a audible/visual annunciating device as shown in the accompanying wiring diagrams, Figures 1, 2 and 3 (see page 4).

CONFIRMING PROPER LOCK-LATCH ENGAGEMENT & CLEARANCES:
The latch and the lock must engage properly for the electric strike to operate as intended. On doors where the gap between the edge of the door and the jamb are within standard tolerances and the latch is the proper length, no adjustments will be required and this is true for the majority of installations.

But too little lock-latch engagement will result in an installation were the door may be easily spread; allowing the locked door to be forced open.

Too much lock-latch engagement will result in a situation where the door release will interfere with the door latch, causing binding; improper operation and premature mechanical wear on the latch and release.

Extended latch length (LL) minus the gap (G) between the edge of the door and the edge of the jamb equals the amount of lock-latch engagement.

"Lock-Latch Engagement = LL - G"

INSTALLATION OF SHIM:
An adequate amount of clearance must exist between the door latch and the strike keeper so that they do not interfere or bind when the door opens or closes. Two 1/16" thick shim are supplied with the TRINE #3258 & #3458 which may be installed as shown in Diagram 8a and 10a to resolve this situation if this problem is encountered. (See Figure 4 below)

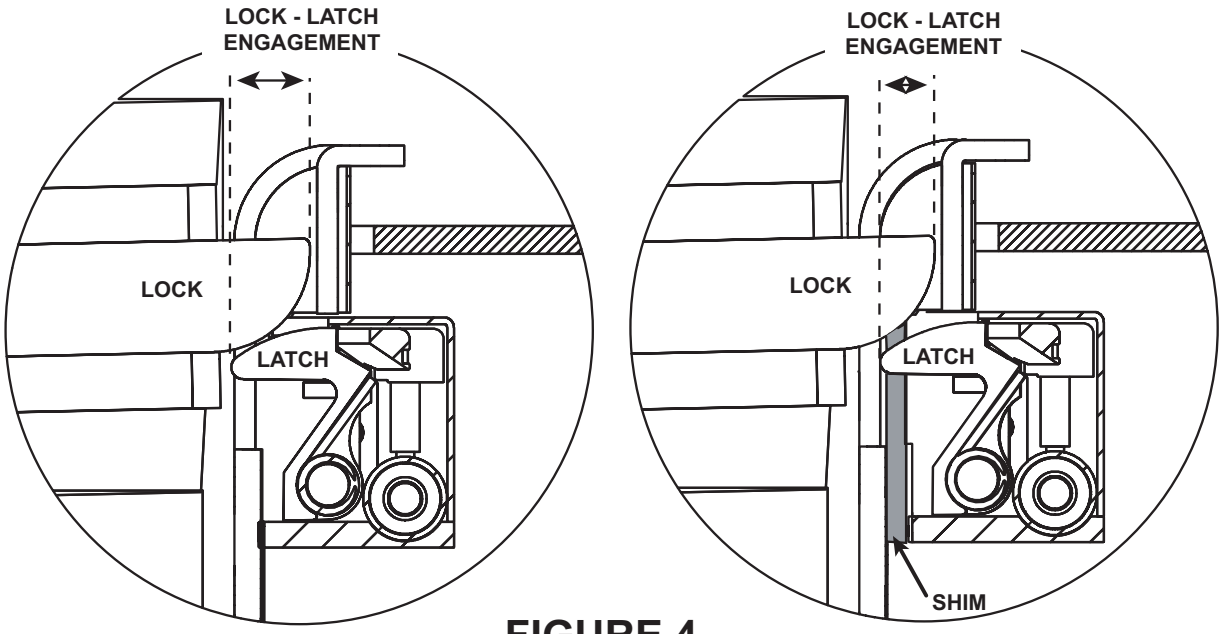

FIGURE 4

FIGURE 1
USING DC TRANSFORMER

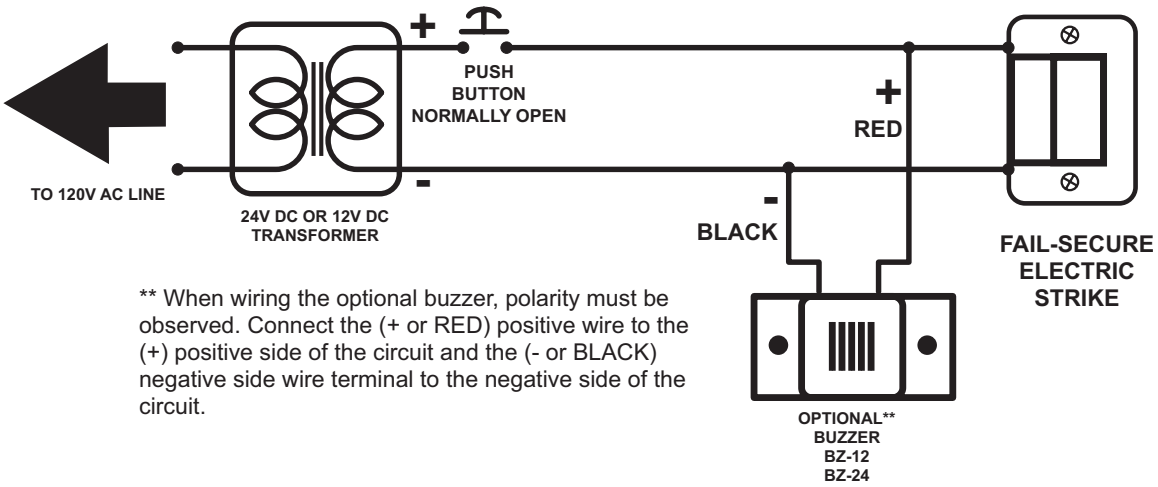

** When wiring the optional buzzer, polarity must be observed. Connect the (+ or RED) positive wire to the (+) positive side of the circuit and the (- or BLACK) negative side wire terminal to the negative side of the circuit.

FIGURE 2
USING AC TRANSFORMER

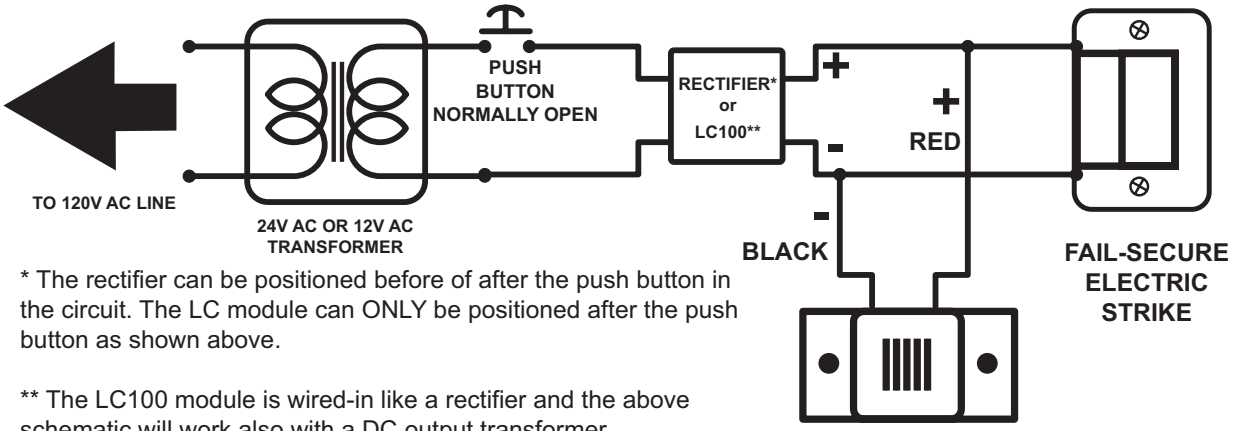

* The rectifier can be positioned before of after the push button in the circuit. The LC module can ONLY be positioned after the push button as shown above.

** The LC100 module is wired-in like a rectifier and the above schematic will work also with a DC output transformer.

*** When wiring the optional buzzer, **polarity must be observed**. Connect the (+ or RED) positive wire to the (+) positive side of the circuit and the (- or BLACK) negative side wire terminal to the negative side of the circuit.

FIGURE 3
FAIL-SAFE MODELS

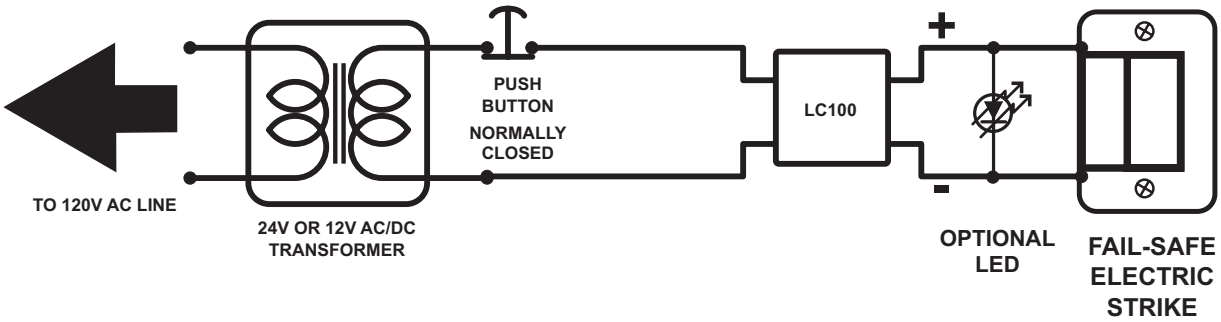

ALUMINUM FRAME INSTALLATION

The 3458's 4-5/8" x 1-9/16" full lip steel faceplate requires the least amount of jamb preparation when compared with other electric strikes with an auxiliary ramp. The full lip design acts as a trim plate by wrapping around the frame edge.

Figure 5 shows the required cutting.

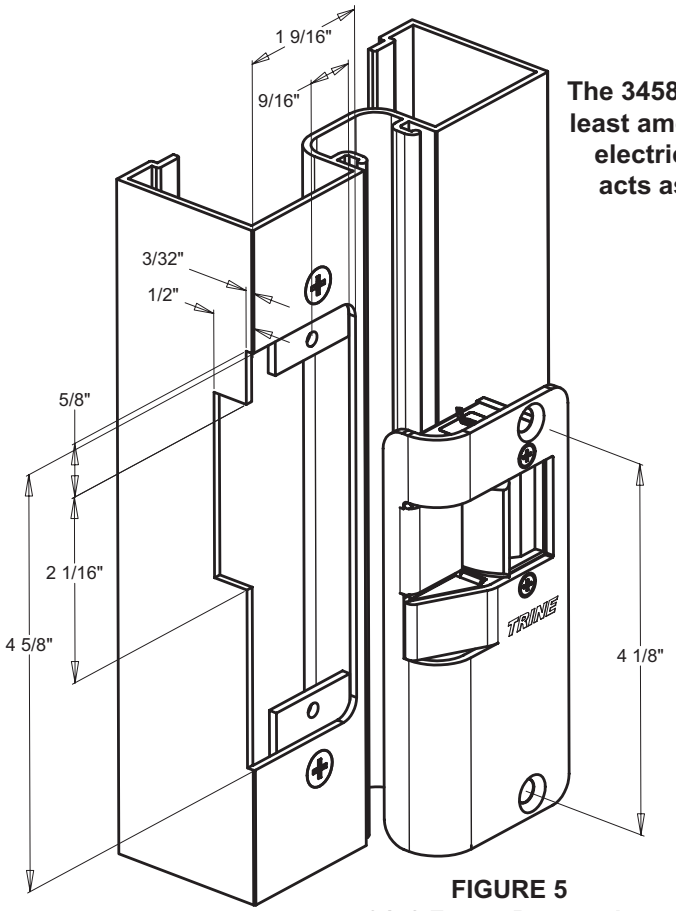

FIGURE 5
3458 Frame Preparation

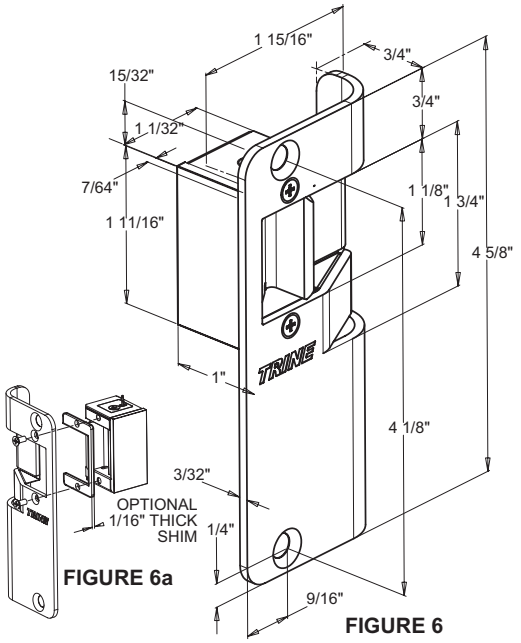

FIGURE 6a

FIGURE 6
3458 Template

ALUMINUM FRAME INSTALLATION

The 3258's 2-5/8" x 5/8" full lip faceplate requires the least amount of jamb preparation when compared with other electric strikes with an auxiliary ramp.

Figure 7 shows how much less cutting is needed by our 3258 electric strike.

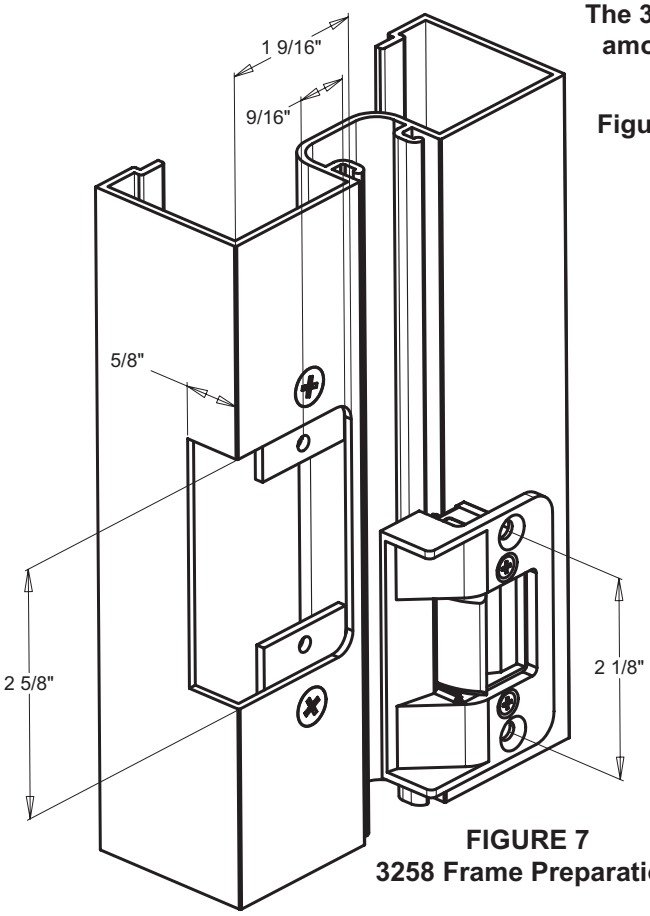

FIGURE 7
3258 Frame Preparation

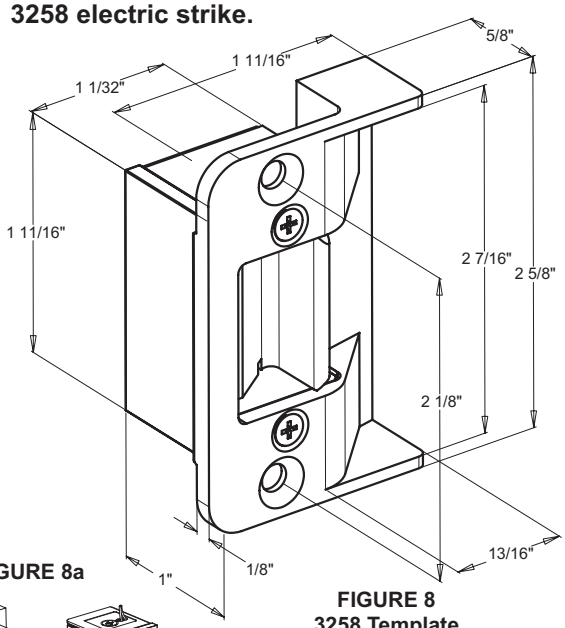

FIGURE 8
3258 Template

FIGURE 8a

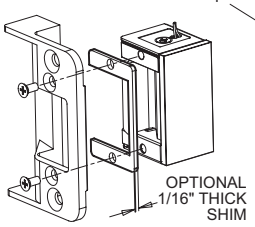

TROUBLESHOOTING THE COMPLETED INSTALLATION:

SYMPTOM: Electric release is not actuating:

1. **Verify proper voltage is present AT STRIKE. If voltage IS present: the strike may have been damaged during the installation, or dirt or debris may be preventing proper operation.**

2. **Verify for proper electric release coil resistance (REFER TO COIL ESISTANCE CHART), for either a short circuit or open circuit. Coil is NOT a serviceable part. Note that intermittent coils can only receive power for 1 minute or less.**

3. **If voltage IS NOT present:**

- **Verify Circuit breaker is on**
- **Verify voltage at the transformer/power supply output.**
- **Verify output from rectifier (if used)**
- **Verify that there are no additional, unknown external switches or devices which may be interrupting your circuit.**
- **Check for damaged wiring or bad wire splices.**

SYMPTOM: Door will not open but strike is working

- **Check for other locks on door**
- **Check for proper lock-latch engagement (SEE SECTION: "CONFIRMING PROPER LOCK-LATCH ENGAGEMENT & CLEARANCES").**
- **Lock latch engagement may be not set correctly. (If proper clearance cannot be achieved by installing a shim; a shorter lock latch may be required for your installation.)**
- **Check for excessive backpressure on door release latch by following these steps:**

  While observing the electric release and latch; apply enough pressure on the door so that the lock's latch does not press on the electric release's latch. If applying pressure as described does not cause nay movement of the lock away form the latch, then there may be too much pressure on the electric release's latch. If electric release works properly while you are applying this pressure, then steps must taken to relieve this pressure. Possible remedies include:

  - **Re-adjust (or install) a door closer**
  - **Remove door silencers**
  - **Correct excessive door warpage**
  - **Re-center electric release in jamb**
  - **Remove or trim weather stripping around the door**

TRINE ACCESS TECHNOLOGY
PHONE: (718) 829-2332 FAX: (718) 829-6405
1440 FERRIS PLACE
BRONX, NY 10461
email: CustomerService@TrineOnline.com
website: www.TrineOnline.com

TRINE ACCESS TECHNOLOGY

AXION PREMIUM ELECTRIC STRIKES

LC100 INSTRUCTIONS

YOU MUST USE THE LC100 ON ALL INSTALLATIONS

The LC-100 is a power regulator for your Axion 3000 Series Strikes. The LED light indicates a properly functioning unit The LC-100 has six (6) wire terminals and they are color coded as follows:

- **White - White Pair:** This is the power input terminal. You can apply 10.8V through 28V AC or DC to this pair.
- **Black - Red Pair:** This is the output terminal. The Black is the negative output and the Red is the positive output. The output voltage is 9.5V DC for approximately 2.5 seconds (also called the trigger voltage) after 2.5 seconds, the voltage output drops down to 5.5V DC for as long as the LC-100 is powered (also called holding voltage). **Remember, the electric strike leads are not polarity sensitive so you can hook up the wires in any order.
- **Blue – Brown Pair:** This pair is an auxiliary power that can be used for a buzzer or indicator light. Brown is the positive output and Blue is the negative output. When the LC-100 is powered this pair outputs 6VDC at 40mA maximum current. **If you are not using this feature it is best to cut the ends off so the wires will not short.

** WARNING - DO NOT SHORT CIRCUIT OUTPUT WIRE LEADS **

WIRING FOR FAIL-SAFE MODE

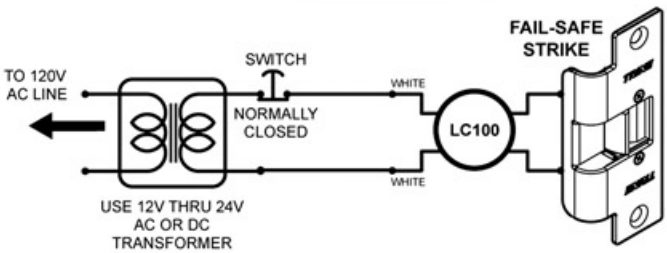

WIRING FOR FAIL-SECURE MODE

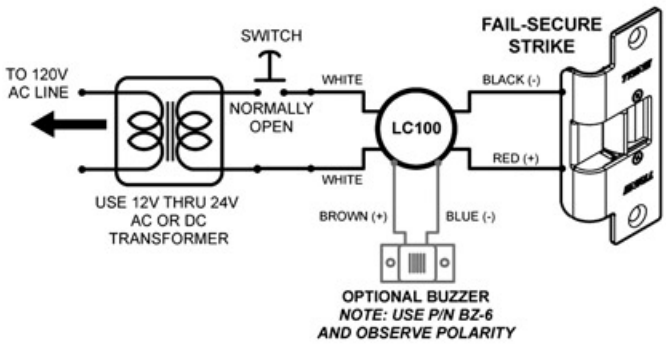

FAILURE TO USE THE LC100 WITH THE ELECTRIC STRIKE WILL VOID THE WARRANTY

Instruction Manual

AXION SERIES - ELECTRIC STRIKE

MODEL EN400, EN400RP

TRINE ACCESS TECHNOLOGY
1440 Ferris Place, Bronx, NY 10461-3699
PH: 718-829-2332 -- FX: 718-829-6405
www.trineonline.com

PARTS LIST

Index No.	Name Part	Number
1	EN400 Latch	EN-LCH
2	EN400RP Latch	EN- RPLCH
3	Slider	EN-SLR
4	Coil Assembly (12V)	EN-CA-12DC or EN-CA-12AC
	Coil Assembly (24V)	EN-CA-24DC or EN-CA-24AC
5	Screws (2) #4-40 x 1/8" (Cover)	EN-SCR 1/8
6	Frame Cover	EN-FR.C
7	Screws #4-40 x 1/4" (Coil)	EN-SCR 1/4
8	Frame **	EN-FR400
9	Assembly Pin*	EN-ASS.PN
10	Spring	EN-SPR
11	Latch Pivot Pin	EN-LCH-PV-ST
12	Slider Guard	EN-GRD
13	Mounting Screws (2) #12-24 x 1/2"	EN-MTS
14	Shim Kit (3) 1/16" Shim	EN-UNV-SHIM
15	Shim Screws (2) #6-32 x 1/4"	EN-SHIM-SCR-S
16	Shim Screws (2) #6-32 x 3/8"	EN-SHIM-SCR-L

NOTE: Number in parenthesis ( ) indicates part in Parts List.

UL LISTED - 10B fire rated (class A, 3-hour, Single Swing Doors) [Except EN400RP]

UL LISTED - 1034 Burglary Resistant Locking Mechanism for Indoor or Outdoor Use

ANSI/BHMA - A156.5 - 1992 - 4-7/8" x 1-1/4" Fits Cutout Specification A115.1 (with Slight Jamb Modification)

BHMA - Grade 1

NYC MEA - 79-01-E

NOTE: UL fire listing is void when using fail safe action or RP latch for Rim Panic Devices.

EN SERIES ELECTRICAL CHARACTERISTICS CHART

Voltage	Amps	Ohms	Duty	Sound
12AC	0.70	4.5	Intm.	Buzz
24AC	0.37	18.0	Intm.	Buzz
12DC	0.28	43.0	Intm./Cont.	Silent
24DC	0.15	164.0	Intm./Cont.	Silent

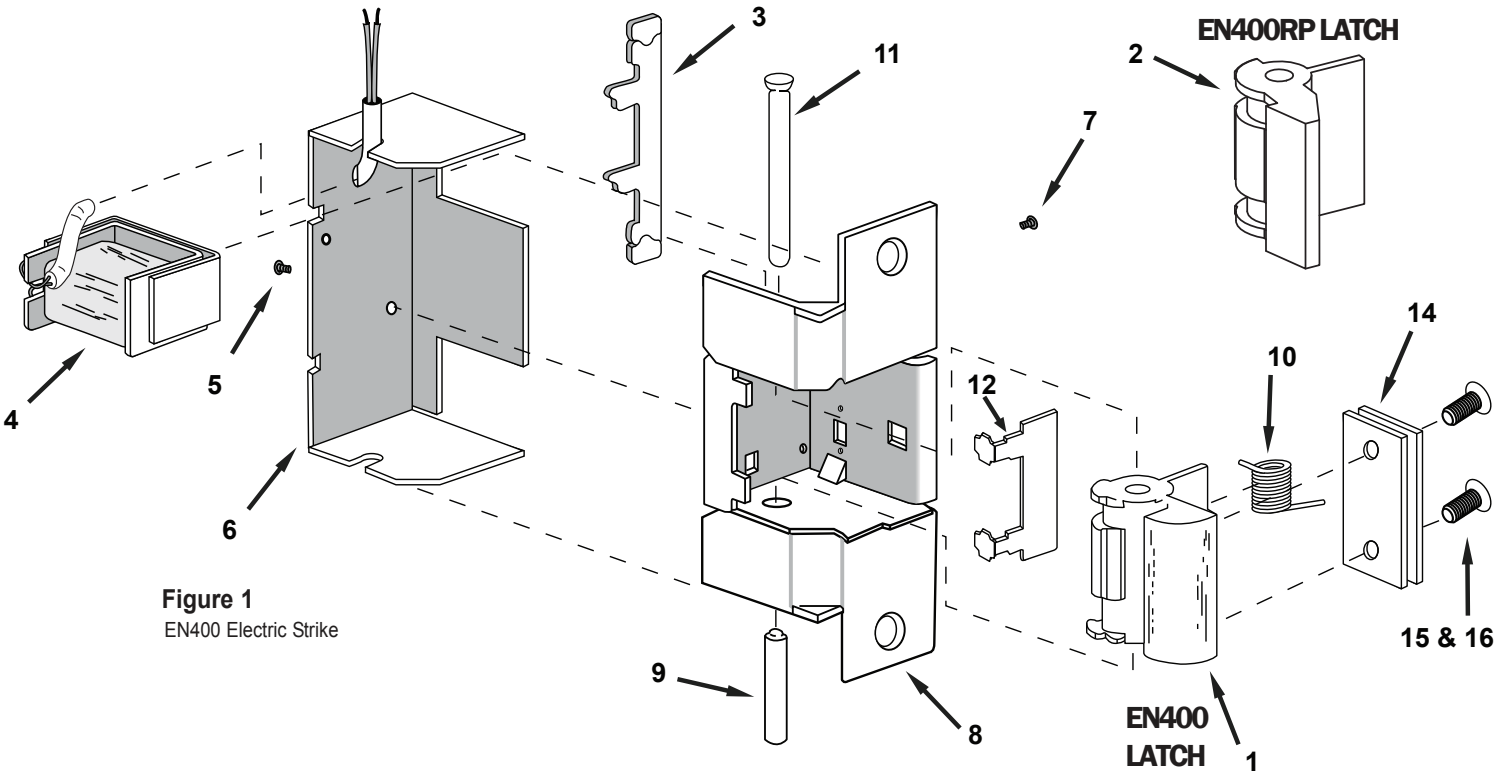

Figure 1
EN400 Electric Strike

DOOR HANDING GUIDE

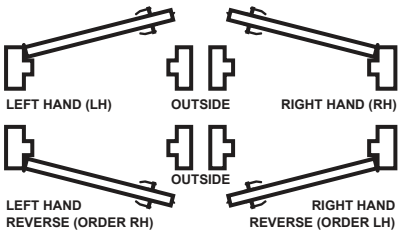

HANDING OF DOOR IS ALWAYS DETERMINED FROM THE OUTSIDE.

HANDING DETERMINATION

Door handing is determined by the position of the hinges, as viewed from the outside of the room or building. If the door hinges are on the left, the door is termed left handed; if the door hinges are on the right, the door is termed right handed. Also a door is either inswinging (opens into the room), or outswinging (opens to the outside of the room).

LATCH ASSEMBLY

Prepare the Latch for assembly. Position the Latch and Latch Spring as shown and pass the assembly pin through the two parts.

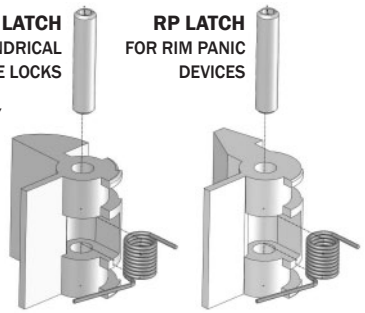

(A)

SWAP LATCHES

At 5 (Below) you may switch out the standard Cylindrical/Mortise Latch for the RP (rim panic) Latch.

Note: RP Latch is NOT Fire Rated (it is Outdoor rated)

HANDING THE STRIKE (RIGHT HAND)

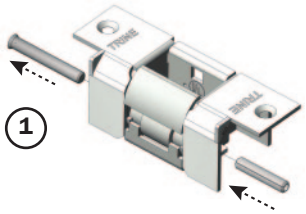

(1)

Disassemble the Back Cover and the solenoid of the Left Hand configured EN strike.

Using the Assembly Pin, push the Latch Pivot Pin out.

Take the Latch & Spring and the Slider Guard out of the frame.

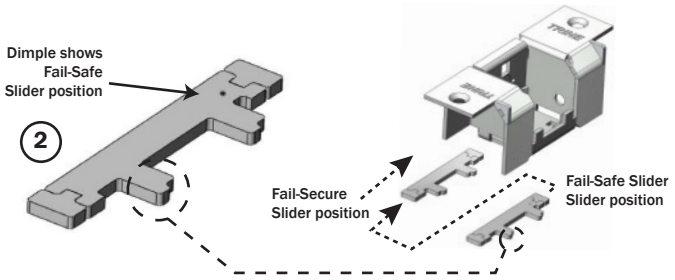

Insert the Slider as Fail-Secure or Fail-Safe position as shown.

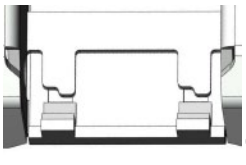

(3)

Align the Slider with the pick guard ribs as shown.

(3)

Assemble the Slider Guard over the Slider.

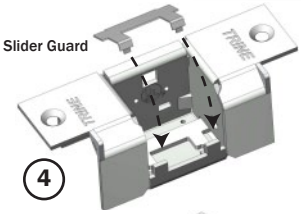

(A) below

Pass the long leg of the Spring through the rectangular hole on the frame and let the Latch assembly drop to position where all the pivot holes lines up.

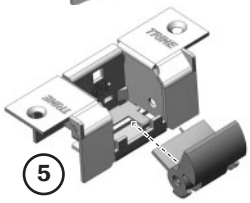

(5)

(6)

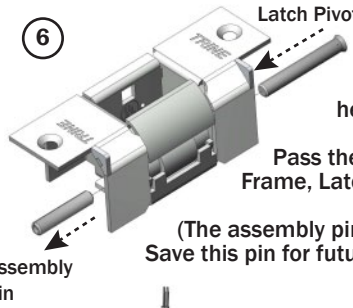

Insert the Latch Pivot Pin making sure that the flared pin head is towards the right as shown.

Pass the Latch Pivot Pin through the Frame, Latch and Spring.

(The assembly pin will fall off the opposite end. Save this pin for future use.)

(7)

Assemble the Solenoid and secure it with the solenoid Screw as shown.

Finish the assembly by installing the Cover and securing it with the two assembly Screws.

HANDING THE STRIKE (LEFT HAND)

Disassemble the Back Cover and the solenoid of the Right Hand configured EN strike.

Using the Assembly Pin, push the Latch Pivot Pin out.

Take the Latch & Spring and the Slider Guard out of the frame.

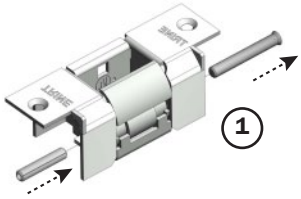

(1)

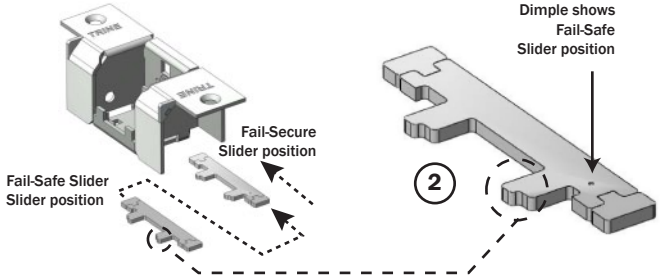

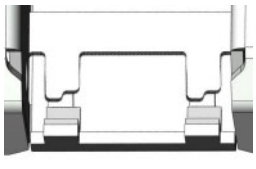

(3)

Align the Slider with the pick guard ribs as shown.

Assemble the Slider Guard over the Slider.

(A) below

Pass the long leg of the Spring through the rectangular hole on the frame and let the Latch assembly drop to position where all the pivot holes lines up.

(6)

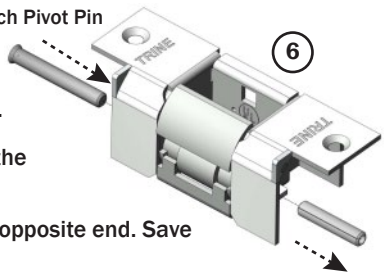

Insert the Latch Pivot Pin making sure that the flared pin head is towards the left as shown.

Pass the Latch Pivot Pin through the Frame, Latch and Spring.

(The assembly pin will fall off the opposite end. Save this pin for future use.)

(8)

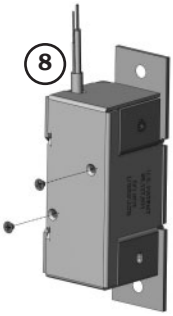

Assemble the Solenoid and secure it with the solenoid Screw as shown.

Finish the assembly by installing the Cover and securing it with the two assembly Screws.

(7)

Cont... Page 2 **Door Handing Determination**

The position of the Electric Strike in the door jamb will be the same for a right-handed door and a lefthanded door. For these installations, the Electric Strike position in the door jamb will be as shown in Figure 3.

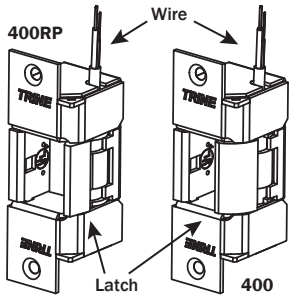

Figure 3. Position of Electric Strike for Right Hand Inswinging and Left Hand Outswinging Door

In a similar manner, the position of the Electric Strike in the door jamb will be the same for a lefthanded reverse bevel door and a right -handed door. For these installations, the Electric Strike position in the door jamb will be as shown in figure (4).

Figure 4. Position of Electric Strike for <u>Left Hand</u> Inswinging and Right Hand Outswinging Door

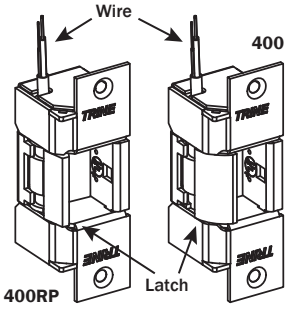

NOTE

The EN Electric Strike must be installed with coil assembly up (wiring toward top of unit). In this position, the Electric Strike will be locked without power, Fail Secure, or locked with power, Fail Safe action. Before performing Handing Procedure, view Electric Strike in up position (wire leads at top) to determine if a handing change is required.

INSTALLATION PROCEDURE:

- For new or replacement installation in wood or metal jambs.

1. Verify that voltage rating of Electric Strike is compatible with supply voltages of installtion. Coil voltages are color coded.

WIRE LEAD	CODE/STRIPE
12AC	Blue/Orange Stripe
12DC	2 Orange Stripe
24AC	Blue/Black Stripe
24DC	2 Black Stripe

2. Using template supplied with Electric Strike, mark door jamb for cutout and screw holes.

NOTE

For proper installation, center line of latches must be aligned with center line of Electric Strike.

3. Prepare door frame (cut out jamb if required) for Electric Strike. Leave sufficient space for splicing between power supply wiring and Electric Strike wiring.

4. If required, run new wiring to door frame mounting hole. See figure 10 for typical wiring installations. Refer to wiring chart below for correct wire size. (Total wiring length includes routing to door-release push button).

Total Wiring Length

To Transformer	12V	24V
Up to 50 Ft	18AWG	20AWG
50 to 150 ft	16AWG	18AWG
150 to 300 ft	14AWG	16AWG
300 to 600 ft	12AWG	14AWG

NOTE

For DC operation, to obtain an audible signal when Electric Strike is energized, install buzzer type BZ-12 for 12VDC operation, or BZ-24 for 24VDC operation (purchased seperately), as illustrated in figure 10. 5. Hold Electric Strike upright (wiring toward top) and determine if handing is required. If so, perform handing procedure.

6. Splice Electric Strike wiring to supply wiring. Secure with wire nuts (supplied).

7. For wood and aluminum door jambs, drill pilot holes for securing Electric Strike to door jamb. For steel and aluminum door jambs, secure Electric Stike to existing mounting tabs.

8. Install Electric Strike into door jamb and secure with flat head mounting screws (supplied).

9. Verify that door operates correctly when Electric Strike is energized and not energized.

NOTE

1. Rectifier can be located either between transformer and push button, or between push button and electric strike.
2. Use either a silicon rectifier or a current regulating rectifier for converting the AC voltage at the transformer secondary to the DC for operating the electric strike.

SAMPLE WIRING DIAGRAMS FOR THE EN SERiES

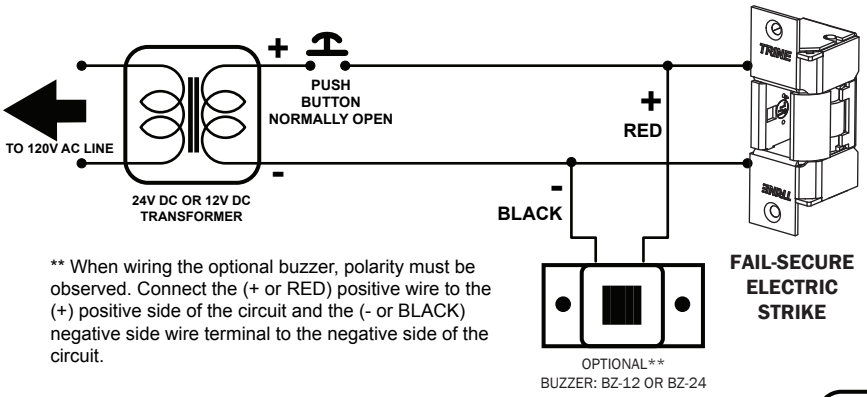

** When wiring the optional buzzer, polarity must be observed. Connect the (+ or RED) positive wire to the (+) positive side of the circuit and the (- or BLACK) negative side wire terminal to the negative side of the circuit.

Figure 10a. USING DC TRANSFORMER

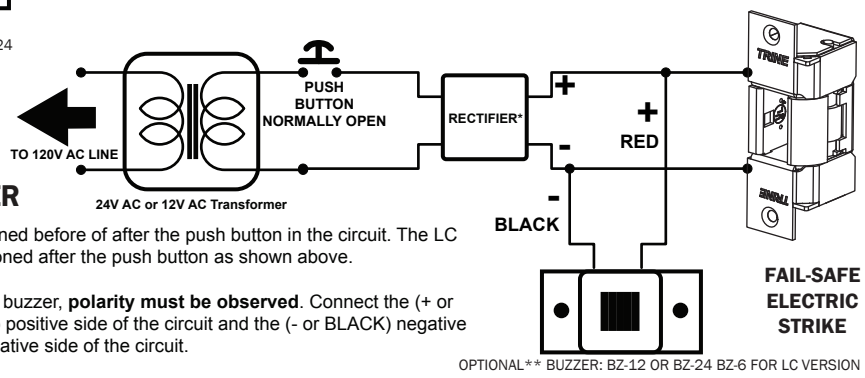

Figure 10b. USING AC TRANSFORMER

* The rectifier can be positioned before of after the push button in the circuit. The LC module can ONLY be positioned after the push button as shown above.

*** When wiring the optional buzzer, **polarity must be observed**. Connect the (+ or RED) positive wire to the (+) positive side of the circuit and the (- or BLACK) negative side wire terminal to the negative side of the circuit.

TROUBLESHOOTING

Possible Trouble	Probable Cause	Suggested Remedy
Door lockset is not secured by Electric Strike	1) Centerline of lockset is not properly aligned to the centerline of the electric strike.	Check for proper cutout installation of Electric Strike by referring to template and door frame and lockset position.
	2) Latch does not project properly into the cavity of the electric strike	Check for excessive gap between door and jamb. Check that lockset is compatible with EN series cavity and requirements. If necessary, use other type of lockset or Electric Strike (refer to Trine Catalog for more information).
	3) Latch Spring broken or missing	Hold Electric Strike so that wiring faces down and apply pressure to Latch. Verify that Latch releases and that there is sufficient Spring tension to push it to closed positionwhen released. If Latch does not have Spring tension, disassemble Electric Strike and inspect for improperly installed or broken Spring.
Electric Strike does no energize (activate)	1) Wiring to electric strike is open or shorted.	Check that electrical connections are secure and that no fraying has occurred during installation. Use voltmeter to verify that Electric Strike is receiving energizing voltage and that wiring is not shorted.
	2) Insufficient voltage to electric strike.	Verify that voltage rating on Electric Strike label is compatiblewith voltage from secondary transformer (12V or 24V). If voltages do not match, either replace transformer or change Electric Strike or Coil Assembly. Use voltmeter to verify that Electric Strike is receiving proper voltage and that wiring is not shorted. If voltage is too low because wire size is too small for length or wiring to Electric Strike (see wiring-length data on previous page), either replace wiring or use transformer with higher VA rating.
	3) Slider does not move when coil receives proper voltage	Using an OHM meter, verify that resistance of the Coils matches the chart on page 3. If Coil is open (burned out), verify that transformer for Electric Strike has correct voltage current AC/DC and is wired correctly. AC Coils do not operate at continuous duty, or on DC voltage. Check that Slider (2) floats freely, as follows: Remove Electric Strike from jamb and hold with wires facing up. Test that Strike is locked by applying pressure to Latch. Then turn Strike upside down with wires facing down and verify that Latch opens freely by applying pressure. The locking Slider (#2) must float freely for unit to operate properly.
Electric Strike energizes but does not disengage the lockset	1) Lockset is applying pressure to electric strike, preventing latch from releasing.	Check for proper cutout installation of Electric Strike. Latch requires proper clearance to open correctly and provide path for Lockset Latch to engage Strike. Check that Lockset Latch is not binding to bottom of Strike cavity due to door sag. Check if foam insulation or the materials around door jamb are preventing door from closing flush, causing door to put pressure on Latch.

FOR ADDITIONAL INFORMATION, HELP, ACCESS TO SPECS ON A OUR FULL LINE OF PRODUCST, OR ADDITIONAL CONTACT OPTIONS PLEASE VISIT OUR WEBSITE

www.trineonline.com

TRINE ACCESS TECHNOLOGY®

TRINE ACCESS TECHNOLOGY
1440 Ferris Place, Bronx, NY 10461-3699
PH: 718-829-2332 -- FX: 718-829-6405

AXION PREMIUM ELECTRIC STRIKES

Instruction Manual

AXION SERIES - ELECTRIC STRIKE

MODEL EN 430/435

TRINE ACCESS TECHNOLOGY
1440 Ferris Place, Bronx, NY 10461-3699
Phone: 718 829-2332 Fax: 718 829-6405
www.trineonline.com

PARTS LIST

Index No.	Name	Part Number
1	Latch	EN-430/435-LCH
2	Slider	EN-430/435-SLR
3	Coil Assembly (12 V) Coil Assembly (24 V)	EN-CA-12AC EN-CA-12DC EN-CA-24AC EN-CA-24DC
4	Screw 4-40 x 1/8 (Cover)	EN-SCR.1/8
5	Frame Cover	EN-FR.C
6	Screw 4-40 x 1/4 (Coil)	EN-SCR.1/4
7	Frame	EN-F430, F435 (Specify LH or RH)
8	Assembly Pin*	EN-ASS.PN
9	Spring	EN-SPR
10	Latch Pivot Shaft	EN-LCH-PV-ST
11	Guard	EN-GRD
12	Face Plate	EN-430FACE, 435FACE
13	Mounting Screws (2) 12-24-1/2”	EN-MTS
14	Shim Kit (4) 1/16” Shim	EN-UNV-SHIM
15	Shim Screws (2) 6-32-1/4”	EN-SHIM-SCR-S
16	Shim Screws (2) 6-32-3/8”	EN-SHIM-SCR-L

* NOT PART OF ASSEMBLY. USED ONLY DURING DISASSEMBLY OR REPAIR.
** UNLESS OTHERWISE SPECIFIED, FRAME IS SUPPLIED AS SATIN STAINLESS STEEL - US32D. SPECIFY OTHER FINISHES AS FOLLOWS: BRIGHT BRASS - US3; SATIN BRASS - US4; DARK BRONZE -10B; BRIGHT CHROME -US26.

NOTE: Number in parenthesis ( ) indicates part in Parts List.

UL LISTED – 10B fire rated (class A, 3-hour, Single Swing Doors)

UL LISTED – 1034 Burglary Resistant Locking Mechanism for Indoor or Outdoor Use

ANSI/BHMA A156.5-1992 – 4-7/8” X 1-1/4” Fits Cutout Specification A115.1 (with Slight Jamb Modification)

BHMA – Grade1

NYC MEA 79-01-E

NOTE: UL 10B fire listing is void when using fail safe action.

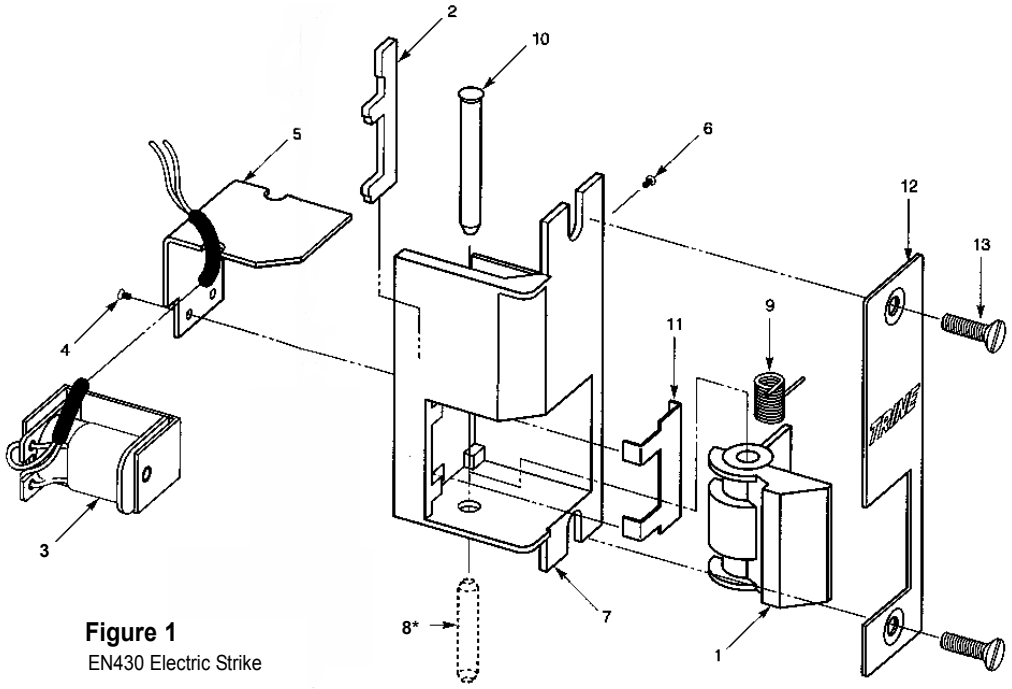

Figure 1
EN430 Electric Strike

HANDING DETERMINATION

The handing of a door is determined by the position of the hinges, as viewed from the outside of the room, building, office, etc. If the door hinges are on the left, the door is termed left-handed; if the door hinges are on the right, the door is termed right-handed. In addition, a door is either inswinging (opens into the room), or outswinging (opens to the outside of the room), as illustrated in Figure 2.

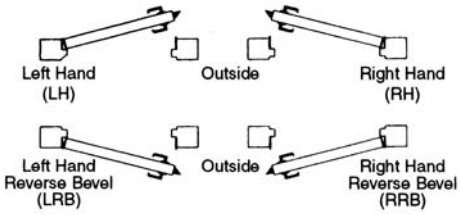

HAND OF DOOR IS ALWAYS DETERMINED FROM THE OUTSIDE

Figure 2. Door Handing Positions

NOTE

The EN430 and 435 are available in either LH (Left-handed) or RH (Right-handed). This needs to be specified when ordering.

The position of the Electric Strike within the door jamb will be the same for a right-handed inswinging door and a left-handed outswinging door. For these installations, the Electric Strike position within the door jamb will be as viewed in Figure 3.

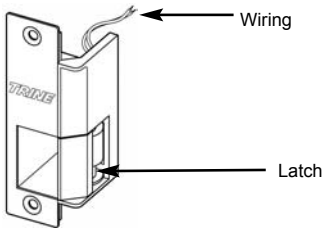

Figure 3. Position of Electric Strike for Right Handed Door.

In a similar manner, the position of the Electric Strike within the door jamb will be the same for a left-handed inswinging door and a right-handed outswinging door. For these installations, the Electric Strike position within the door jamb will be as viewed in Figure 4.

Figure 4.
Position of Electric Strike for Left Handed Door

ACTION (FAIL SECURE OR FAIL SAFE)

The standard action is fail secure and is field changeable to fail safe when replaced with special order part EN-SLR-RS. When using the fail safe Slider, a DC Coil must be used.

The fail safe Slider is identified by the small dimple below the welded tip.

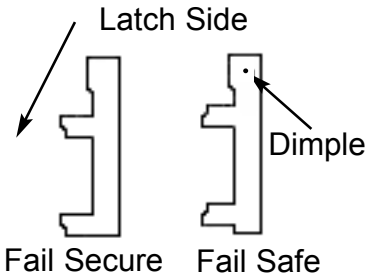

CHANGING THE ACTION

1. Place Electric Strike face down and, from back of assembly, remove Screw (4) from Frame Cover (5). Remove Frame Cover from Electric Strike.

2. On side of Electric Strike, remove Screw (6), which holds Coil Assembly (3) to Frame (7).

3. Remove Coil Assembly from Electric Strike.

NOTE

The Latch (1) is removed in the following step. Assembly Pin (8) is pushed through Latch to keep Spring (9) in place. If Assembly Pin is not available, use care when removing Latch Pivot Shaft (10) to keep Spring within Latch. If Spring comes out of Latch, reinstall Spring as shown in Figure 5.

The four EN latch shims provide cavity width adjustment in 1/16" incraments.

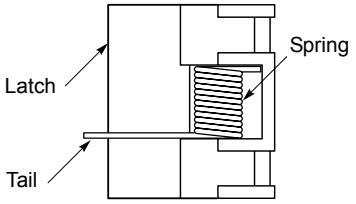

Figure 5.
Correct orientation of Latch Spring

Place Electric Strike on a flat surface with front of frame (7) facing up and insert Assembly Pin (8) into Latch to push out Latch Pivot Shaft (10). Remove Latch (1) containing Assembly Pin.

From top of frame remove Slider (2) from beneath Guard (11). Figure 6A. Take replacement fail safe Slider and insert through top opening with welded tip in upright position. Make sure the Slider rests on the bottom of the cavity. Figure 6B.

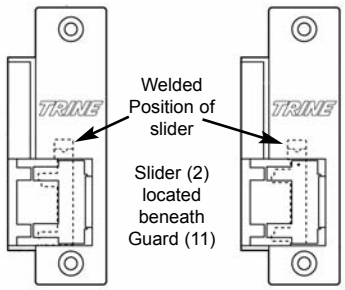

Fail Secure 6A **Fail Safe 6B**

Figure 6.
Slider and Guard Positions

Hold Latch by satin side and roll into frame cavity with back end and exposed tip of Spring at the bottom of the cavity. Insert tail end of Spring into hole on the side of frame while replacing latch.

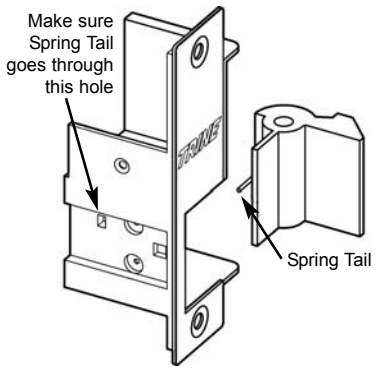

Figure 7.

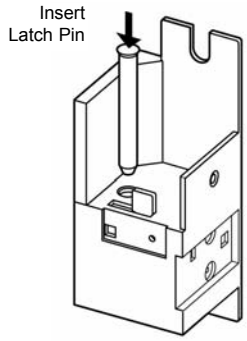

Take Latch Pivot Shaft with crown end in upright position and insert through shaft hole at the top of the frame. This will push the Assembly Pin out through bottom hole.

Figure 8.

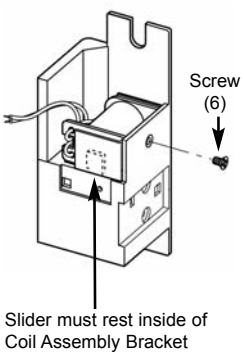

Check Slider action. Make sure Slider is free to move up and down with no resistance.

Before replacing cover, make sure the unit operates properly by testing with appropriate voltage. NOTE: Do not attempt to lubricate Electric Strike!!!

Place Strike face down and attach the cover over the Coil with wire leads seated through the notched hole.

Figure 9.

INSTALLATION PROCEDURE

For new or replacement installation:

1. Verify that voltage rating of Electric Strike is compatible with voltage supply at installation. Coil assembles are wire lead color coded for voltage as shown:

WIRE LEAD	CODE/STRIPE
12AC	Blue/Orange Stripe
12DC	2 Orange Stripe
24AC	Blue/Black Stripe
24DC	2 Black Stripe

2. Using dimensions of template supplied with Electric Strike, mark door frame for cutout and screw holes.

3. Prepare door jamb (cut out frame if required) for Electric Strike. Leave sufficient wire length or splicing between power wiring and Electric Strike wire leads.

4. If required, run new wiring to door frame mounting hole. See Figure 10 for typical wiring installations. Refer to wiring chart below for correct wire size. (Total wiring length includes routing to door-release push button.)

NOTE

For DC operation, to obtain an audible signal when Electric Strike is energized, install buzzer type BZ-12 for 12 VDC operation, or BZ-24 for 24 VDC operation (purchased separately), as illustratd in Figure 10. DC buzzer must be wired in parallel.

5. Splice Electric Strike wiring to power wiring and secure with wire nuts supplied.

6. Install Electric Strike into door jamb and secure with Screws supplied into the Strike Face Plate..

7. Verify that door operates correctly when Electric Strike is energized and not energized.

NOTE

1. Rectifier can be located either between transformer and push button or between push button and Electric Strike.

2. Use a current-regulating rectifier (CR-1) for converting AC voltage at the transformer secondary to DC for operating a DC Electric Strike.

3. AC units should not be operated at continuous duty.

4. Improperly installed or misused units are not covered by manufacturer's warranty.

5. In UL listed systems, a UL listed burglar alarm power supply and annunciator of compatible rating should be employed.

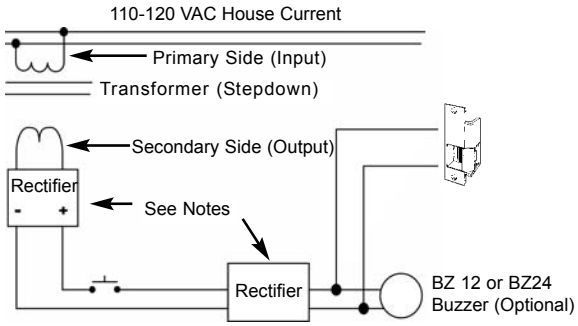

Figure 10.
Typical Electric Strike Wiring

ELECTRICAL CHARACTERISTICS CHART

FAIL SECURE(Intermittent Duty) NORMALLY LOCKED

VOLTAGE	CURRENT/AMPS	OHMS	SOUND	DUTY
12 VAC	.70	4.5	Buzz	Intm
24 VAC	.37	18.0	Buzz	Intm
12 VDC	.28	43.0	Silent	Intm/Cont
24 VDC	.15	64.0	Silent	Intm/Cont

TOTAL WIRING LENGTH TO TRANSFORMER	12V	24V
Up to 50 ft	18 AWG	20 AWG
50 to 150 ft	16 AWG	18 AWG
150 to 300 ft	14 AWG	16 AWG
300 to 600 ft	12 AWG	14 AWG

TRINE ACCESS TECHNOLOGY
1440 Ferris Place • Bronx, NY 10461-3699
Phone: 718 829-2332 • Fax: 718 829-6405

TROUBLESHOOTING

Possible Trouble	Probable Cause	Suggested Remedy
Door lockset is not secured by Electric Strike	**1.** Centerline of lockset not properly aligned to centerline of Electric Strike.	Check for proper cutout installation of Electric Strike by referring to template and door frame and lockset position.
	2. Latch does not project properly into cavity of Electric Strike.	Check for excessive gap between door and jamb. Check that lockset is compatible with EN series cavity and requirements. If necessary, use other type of lockset or Electric Strike (refer to Trine Catalog for more information).
	3. Latch Spring broken or missing.	Hold Electric Strike so that wiring faces down and apply pressure to Latch. Verify that Latch releases and that there is sufficient Spring tension to push it to closed positionwhen released. If Latch does not have Spring tension, disassemble Electric Strike and inspect for improperly installed or broken Spring.
Electric Strike does not energize	**1.** Wiring to Electric Strike open or shorted.	Check that electrical connections are secure and that no fraying has occurred during installation. Use voltmeter to verify that Electric Strike is receiving energizing voltage and that wiring is not shorted.
	2. Insufficient voltage to Electric Strike.	Verify that voltage rating on Electric Strike label is compatible with voltage from secondary transformer (12V or 24V). If voltages do not match, either replace transformer or change Electric Strike or Coil Assembly. Use voltmeter to verify that Electric Strike is receiving proper voltage and that wiring is not shorted. If voltage is too low because wire size is too small for length or wiring to Electric Strike (see wiring-length data on previous page), either replace wiring or use transformer with higher VA rating.
	3. Slider does not move when Coil receives proper voltage.	Using an OHM meter, verify that resistance of the Coils matches the chart on page 3. If Coil is open (burned out), verify that transformer for Electric Strike has correct voltage current AC/DC and is wired correctly. AC Coils do not operate at continuous duty, or on DC voltage. Check that Slider (2) floats freely, as follows: Remove Electric Strike from jamb and hold with wires facing up. Test that Strike is locked by applying pressure to Latch. Then turn Strike upside down with wires facing down and verify that Latch opens freely by applying pressure. The locking Slider (#2) **must** float freely for unit to operate properly.
Electric Strike energizes but does not disengage lockset	**1.** Lockset is applying pressure to Electric Strike, preventing Latch from releasing.	Check for proper cutout installation of Electric Strike. Latch requires proper clearance to open correctly and provide path for Lockset Latch to engage Strike. Check that Lockset Latch is not binding to bottom of Strike cavity due to door sag. Check if foam insulation or the materials around door jamb are preventing door from closing flush, causing door to put pressure on Latch.

Instruction Manual

AXION SERIES - ELECTRIC STRIKE

MODEL EN 800

TRINE ACCESS TECHNOLOGY
1440 Ferris Place, Bronx, NY 10461-3699
Phone: 718 829-2332 Fax: 718 829-6405
www.trineonline.com

PARTS LIST

Index No.	Name	Part Number
1	Latch	EN-PLCH
2	Slider	EN-SLR
3	Coil Assembly (12 V) Coil Assembly (24 V)	EN-CA-12DC, EN-CA-12AC EN-CA-24DC, EN-CA-24AC
4	Screws (2) 4-40 X 1/8 (Cover)	EN-SCR (2)
5	Frame Cover	EN-FR.C
6	Screw 4-40 x 1/4	EN-SCR
7	Frame**	EN--FR800
8	Assembly Pin*	EN-ASS.PN
9	Spring	EN-SPR
10	Latch Pivot Shaft	EN-LCH-PV-ST
11	Guard	EN-GRD
12	Plastic Cap	EN-PLC
13	Face Plate	EN-800-FACE
14	Mounting Screws (2)	EN-800-MTS

* NOT PART OF ASSEMBLY. USED ONLY DURING DISASSEMBLY OR CHANGING FAIL SECURE ACTION.
** UNLESS OTHERWISE SPECIFIED, FRAME IS SUPPLIED AS SATIN STAINLESS STEEL - US32D. SPECIFY OTHER FINISHES AS FOLLOWS: BRIGHT BRASS - US3; SATIN BRASS - US4; DARK BRONZE -10B; BRIGHT CHROME -US26.

NOTE: Number in parenthesis ( ) indicates part in Parts List.

UL LISTED - 1034 Burglary Resistant Locking Mechanism for Indoor or Outdoor Use

BHMA - Grade 1

NYC MEA 79-01-E

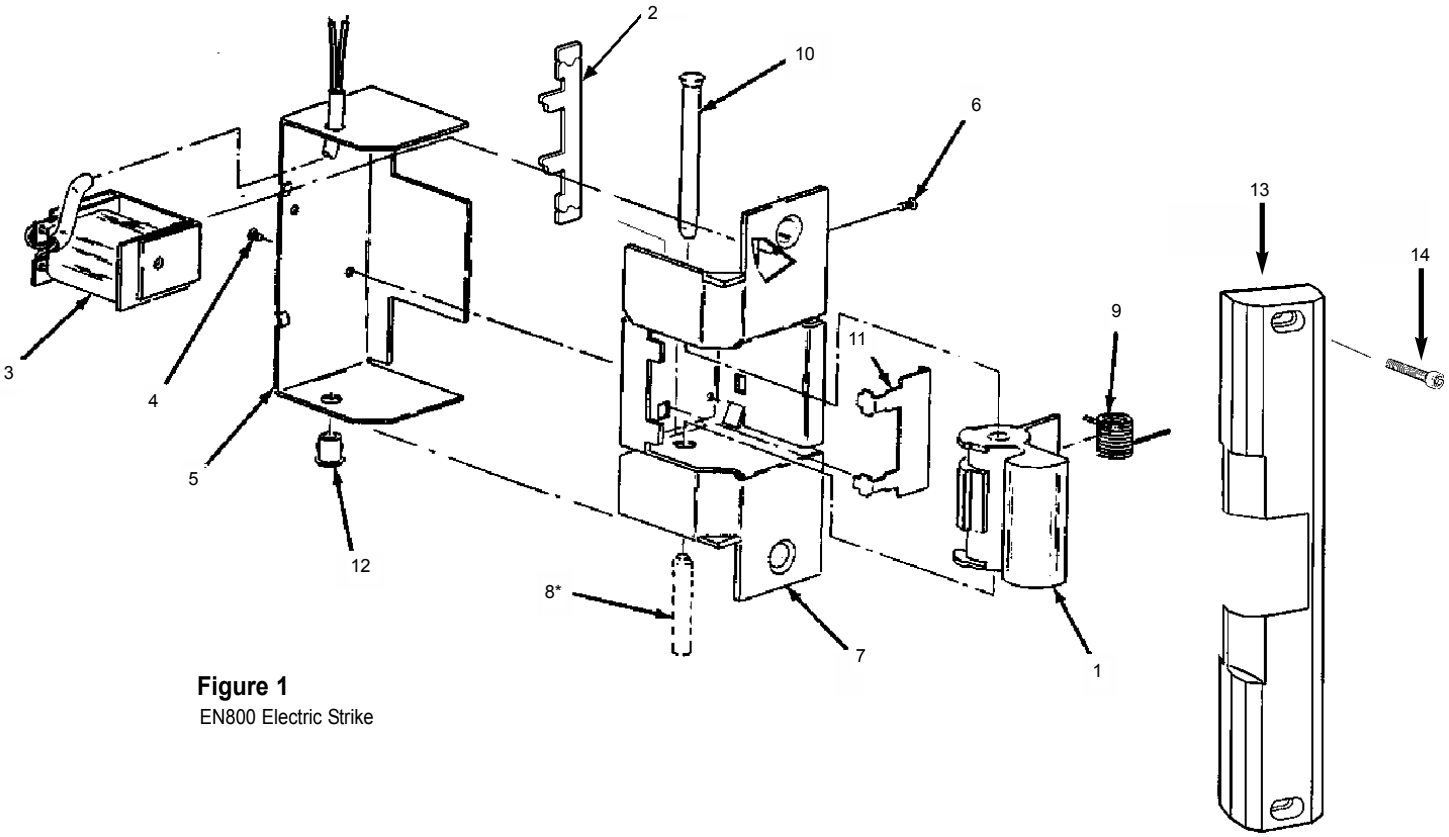

Figure 1
EN800 Electric Strike

HANDING DETERMINATION

The handing of a door is determined by the position of the hinges, as viewed from the outside of the room, building, office, etc. If the door hinges are on the left, the door is termed left-handed; if the door hinges are on the right, the door is termed right-handed. In addition, a door is either inswinging (opens into the room), or outswinging (opens to the outsie of the room), as illustrated in Figure 2.

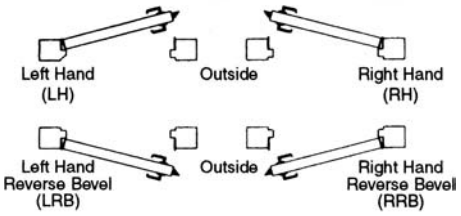

HAND OF DOOR IS ALWAYS DETERMINED FROM THE OUTSIDE

Figure 2. Door Handing Positions

The position of the Electric Strike within the door jamb will be the same for a right-handed inswinging door and a left-handed outswinging door. For these installations, the Electric Strike position within the door jamb will be as viewed in Figure 3.

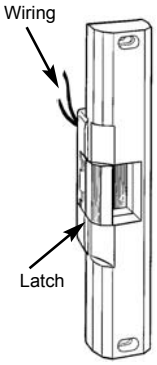

Figure 3. Position of Electric Strike for Right Hand Inswinging and Left Hand Outswinging Door

NOTE:

The EN Electric Strike must be installed with coil assembly up (wiring toward top of unit). In this position, the Electric Strike will be locked without power, Fail Secure, or locked with power, Fail Safe action. Before performing Handing Procedure, view Electric Strike in up position (wire leads at top) to determine if a handing change is required.

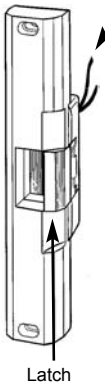

In a similar manner, the position of the Electric Strike within the door jamb will be the same for a left-handed inswinging door and a right-handed outswinging door. For these installations, the Electric Strike position within the door jamb will be as viewed in figure (4).

Figure 4. Position of Electric Strike for Left-Hand Inswinging and Right-Hand Outswinging Doors

HANDING PROCEDURE

Perform this procedure only when necessary to change direction of Latch (1, figure 1) in relation to door frame (see figures 3 and 4). Then frame handing is performed by reversing the position of the double ended Slider (2, figure 1) and Coil Assembly (3).

1. Place Electric Strike face down, and from back of assembly, remove two Screws (4) from Frame Cover (5). Remove Frame Cover from Electric Strike, being careful when pulling coil leads (with shrink tubing) through opening in Frame Cover (5).

2. With the cover removed, take note of label marked “Left Hand/Right Hand”. The label indicates proper hand orientation of strike frame during procedure, for final coil assembly.

3. On the side of Electrc Strike, remove Screw (6), which holds Coil Assembly (3) to Frame (7).

4. Remove Coil Assembly from Electric Strike.

NOTE

The Latch (1) is removed in the following step. Assembly Pin (8) is pushed through Latch to keep Spring (9) in place. If Asseembly Pin is not available, use care when removing Latch Pivot Shaft (10) to keep Spring within Latch. If Spring comes out of Latch, reinstall Spring as shown in figure 5.

The four EN latch shims provide cavity width adjustment in 1/16” increments.

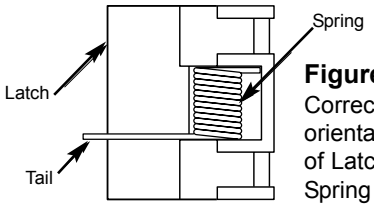

Figure 5. Correct orientation of Latch Spring

5. Place Strike on a flat surface with front of Frame (7) facing up while maintaining orientation for final handing. Insert Asembly Pin (8) into Latch to push out Latch Pivot Shaft (10). Remove Latch (1) containing Assembly Pin.

6. From end of frame remove slider from beneath Guard (11) Figure 6A. Flip slider (reverse ends) and insert through slot in frame, with slider dimple at bottom end of frame. In this position the dimple on slider is at opposite end of frame from coil, at top of frame. The slider in this position maintains the fail secure action, when changing hand.

ACTION (FAIL SECURE OR FAIL SAFE)

The standard action is fail secure and is field changeable by reversing the end of slider during assembly.

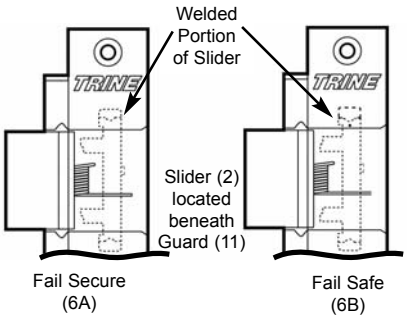

Figure 6.

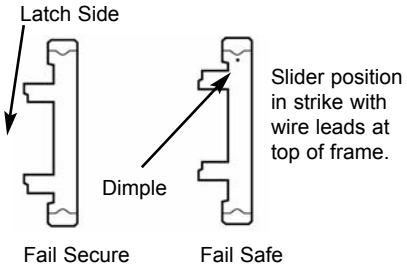

Figure 7.

Hold Latch by satin end side and roll into frame cavity with back end and exposed tip of Spring at the botom of the cavity. Insert tail end of Spring into hole on the side of frame while replacing Latch.

Take Latch Pivot Shaft with crown end in upright position and insert through shaft hole at the top of the frame “in” selected handing. This will push the Assembly Pin through bottom hole.

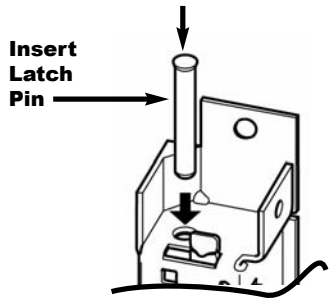

Figure 8.

Place Coil at top of frame, aligning the Coil Bracket threaded hole with the hole in the frame. The Slider tip should rest between the side of Coil and Coil Bracket. Secure Coil to the frame with Coil Assembly Screw (#6).

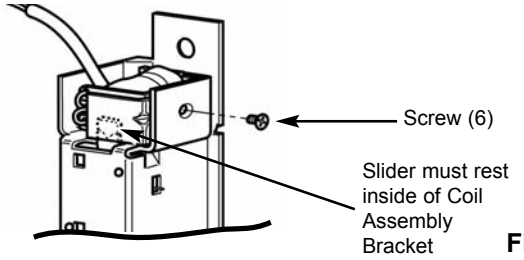

Figure 9.

Check Slider action . Make sure Slider is free to move up and down with no resistance.

Before replacing cover, make sure the unit operates properly by testing with appropriate voltage.

NOTE: Do not attempt to lubricate Electric Strike!!!

Place Strike face down and place wire leads through hole in cover. Attach cover with two screws (4).

INSTALLATION PROCEDURE: - For new or replacement installation in wood or metal jambs.

1. Verify that voltage rating of Electric Strike is compatible with supply voltages of installation. Coil voltages are color coded.

WIRE LEAD	CODE/STRIPE
12AC	Blue/Orange Stripe
12DC	2 Orange Stripe
24AC	Blue/Black Stripe
24DC	2 Black Stripe

2. Using template supplied with Electric Strike, mark door jamb for cutout and screw holes.

NOTE

For proper installation, center line of latchset must be aligned with center line of Electric Strike.

3. Prepare door frame (cut out jamb if required) for Electric Strike. Leave sufficient space for splicing between power supply wiring and Electric Strike wiring.

4. If required, run new wiring to door frame mounting hole. See figure 10 for typical wiring installations. Refer to wiring chart below for correct wire size. (Total wiring length includes routing to door-release push button).

Total Wiring Length to Transformer	12V	24V
Up to 50 Ft	18AWG	20AWG
50 to 150 ft	16AWG	18AWG
150 to 300 ft	14AWG	16AWG
300 to 600 ft	12AWG	14AWG

NOTE

For DC operation, to obtain an audible signal when Electric Strike is energized, install buzzer type BZ-12 for 12VDC operation, or BZ-24 for 24VDC operation (purchased seperately), as illustrated in figure 10.

5. Hold Electric Strike upright (wiring toward top) and determine if handing is required. If so, perform handing procedure.

6. Splice Electric Strike wiring to supply wiring. Secure with wire nuts (supplied).

7. For wood and aluminum door jambs, drill pilot holes for securing Electric Strike to door jamb. For steel and aluminum door jambs, secure Electric Stike to existing mounting tabs.

8. Install Electric Strike into door jamb and secure with flat head mounting screws (supplied).

9. Verify that door operates correctly when Electric Strike is energized and not energized.

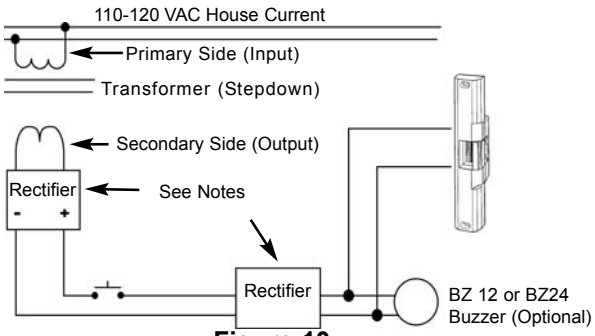

Figure 10.

NOTES:

1. Rectifier can be located either between transformer and push button, or between push button and electric strike.
2. Use either a silicon rectifier or a current-regulating rectifier for converting the AC voltage at the transformer secondary to the DC for operating the electric strike.

ELECTRICAL CHARACTERISTIC CHART

FAIL SECURE (Intermittent Duty) NORMALLY LOCKED

VOLTAGE	CURRENT/AMPS	OHMS	SOUND	DUTY
12VAC	.70	4.5	Buzz	Intermittent
24VAC	.37	18.0	Buzz	Intermittent
12VDC	.28	43.0	Silent	Inter/Cont
24VDC	.15	164.0	Silent	Inter/Cont

TROUBLESHOOTING

Possible Trouble	Probable Cause	Suggested Remedy
Door lockset is not secured by Electric Strike	**1.** Centerline of lockset not properly aligned to centerline of Electric Strike.	Check for proper cutout installation of Electric Strike by referring to template and door frame and lockset position.
	2. Latch does not project properly into cavity of Electric Strike.	Check for excessive gap between door and jamb. Check that lockset is compatible with EN series cavity and requirements. If necessary, use other type of lockset or Electric Strike (refer to Trine Catalog for more information).
	3. Latch Spring broken or missing.	Hold Electric Strike so that wiring faces down and apply pressure to Latch. Verify that Latch releases and that there is sufficient Spring tension to push it to closed positionwhen released. If Latch does not have Spring tension, disassemble Electric Strike and inspect for improperly installed or broken Spring.
Electric Strike does not energize	**1.** Wiring to Electric Strike open or shorted.	Check that electrical connections are secure and that no fraying has occurred during installation. Use voltmeter to verify that Electric Strike is receiving energizing voltage and that wiring is not shorted.
	2. Insufficient voltage to Electric Strike.	Verify that voltage rating on Electric Strike label is compatible with voltage from secondary transformer (12V or 24V). If voltages do not match, either replace transformer or change Electric Strike or Coil Assembly. Use voltmeter to verify that Electric Strike is receiving proper voltage and that wiring is not shorted. If voltage is too low because wire size is too small for length or wiring to Electric Strike (see wiring-length data on previous page), either replace wiring or use transformer with higher VA rating.
	3. Slider does not move when Coil receives proper voltage.	Using an OHM meter, verify that resistance of the Coils matches the chart on page 3. If Coil is open (burned out), verify that transformer for Electric Strike has correct voltage current AC/DC and is wired correctly. AC Coils do not operate at continuous duty, or on DC voltage. Check that Slider (2) floats freely, as follows: Remove Electric Strike from jamb and hold with wires facing up. Test that Strike is locked by applying pressure to Latch. Then turn Strike upside down with wires facing down and verify that Latch opens freely by applying pressure. The locking Slider (#2) **must** float freely for unit to operate properly.
Electric Strike energizes but does not disengage lockset	**1.** Lockset is applying pressure to Electric Strike, preventing Latch from releasing.	Check for proper cutout installation of Electric Strike. Latch requires proper clearance to open correctly and provide path for Lockset Latch to engage Strike. Check that Lockset Latch is not binding to bottom of Strike cavity due to door sag. Check if foam insulation or the materials around door jamb are preventing door from closing flush, causing door to put pressure on Latch.

Instruction Manual

AXION SERIES - ELECTRIC STRIKE

MODEL EN 900-950-960 (with or without suffix of "W" for wood)

TRINE ACCESS TECHNOLOGY
1440 Ferris Place, Bronx, NY 10461-3699
Phone: 718 829-2332 Fax: 718 829-6405
www.trineonline.com

PARTS LIST

Index No.	Name	Part Number
1	Latch	EN-LCH
2	Slider	EN-SLR
3	Coil Assembly (12 V) Coil Assembly (24 V)	EN-CA-12DC, EN-CA-12AC EN-CA-24DC, EN-CA-24AC
4	Screws (2) 4-40 X 1/8 (Cover)	EN-SCR (2)
5	Frame Cover	EN-FR.C
6	Screw 4-40 x 1/4	EN-SCR
7	Frame**	EN-9-FR
8	Assembly Pin*	EN-ASS.PN
9	Spring	EN-SPR
10	Latch Pivot Shaft	EN-LCH-PV-ST
11	Guard	EN-GRD
12	Plastic Cap	EN-PLC
13	Support Plate	EN-9-SP
14	Mounting Screws(2) 12-24-1/2"	EN-MTS
15	Shim Kit (4) 1/16"	EN-UNV-SHIM
16	Shim Screws (2) 6-32-1/4"	EN-SHIM-SCR-S
17	Shim Screws (2) 6-32-3/8"	EN-SHIM-SCR-L

* NOT PART OF ASSEMBLY. USED ONLY DURING DISASSEMBLY OR CHANGING FAIL SECURE ACTION.
** UNLESS OTHERWISE SPECIFIED, FRAME IS SUPPLIED AS SATIN STAINLESS STEEL - US32D. SPECIFY OTHER FINISHES AS FOLLOWS: BRIGHT BRASS - US3; SATIN BRASS - US4; DARK BRONZE -10B; BRIGHT CHROME -US26.

NOTE: Number in parenthesis ( ) indicates part in Parts List.

UL LISTED - 10B fire rated (class A, 3-hour, Single Swing Doors)

UL LISTED - 1034 Burglary Resistant Locking Mechanism for Indoor or Outdoor Use

BHMA - Grade 1

NYC MEA 79-01-E

NOTE: UL fire listing is void when using fail safe action.

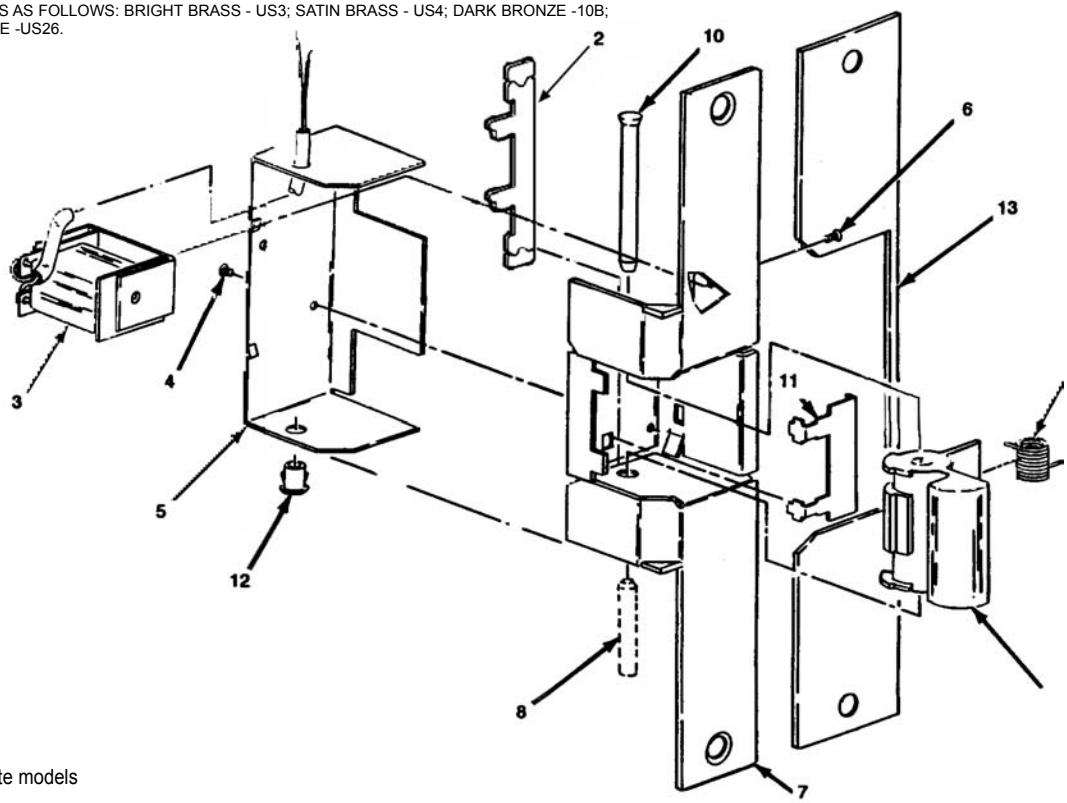

Figure 1
EN 9" Face Plate models

HANDING DETERMINATION

The handing of a door is determined by the position of the hinges, as viewed from the outside of the room, building, office, etc. If the door hinges are on the left, the door is termed left-handed; if the door hinges are on the right, the door is termed right-handed. In addition, a door is either inswinging (opens into the room), or outswinging (opens to the outsie of the room), as illustrated in Figure 2.

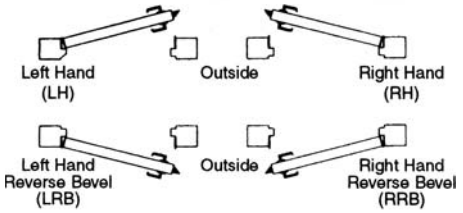

HAND OF DOOR IS ALWAYS DETERMINED FROM THE OUTSIDE

Figure 2. Door Handing Positions

The position of the Electric Strike within the door jamb will be the same for a right-handed inswinging door and a left-handed outswinging door. For these installations, the Electric Strike position within the door jamb will be as viewed in Figure 3.

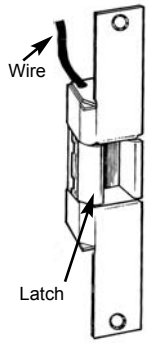

Figure 3. Position of Electric Strike for Right Hand Inswinging and Left Hand Outswinging Door

NOTE:

The EN Electric Strike must be installed with coil assembly up (wiring toward top of unit). In this position, the Electric Strike will be locked without power, Fail Secure, or locked with power, Fail Safe action. Before performing Handing Procedure, view Electric Strike in up position (wire leads at top) to determine if a handing change is required.

In a similar manner, the position of the Electric Strike within the door jamb will be the same for a left-handed inswinging door and a right - handed outswinging door. For these installations, the Electric Strike position within the door jamb will be as viewed in figure (4).

Figure 4. Position of Electric Strike for Left-Hand Inswinging and Right-Hand Outswinging Doors

HANDING PROCEDURE

Perform this procedure only when necessary to change direction of Latch (1, figure 1) in relation to door frame (see figures 3 and 4). Then frame handing is performed by reversing the position of the double ended Slider (2, figure 1) and Coil Assembly (3).

1. Place Electric Strike face down, and from back of assembly, remove two Screws (4) from Frame Cover (5). Remove Frame Cover from Electric Strike, being careful when pulling coil leads (with shrink tubing) through opening in Frame Cover (5).

2. With the cover removed, take note of label marked “Left Hand/Right Hand”. The label indicates proper hand orientation of strike frame during procedure, for final coil assembly.

3. On the side of Electrc Strike, remove Screw (6), which holds Coil Assembly (3) to Frame (7).

4. Remove Coil Assembly from Electric Strike.

NOTE

The Latch (1) is removed in the following step. Assembly Pin (8) is pushed through Latch to keep Spring (9) in place. If Asseembly Pin is not available, use care when removing Latch Pivot Shaft (10) to keep Spring within Latch. If Spring comes out of Latch, reinstall Spring as shown in figure 5.

The four EN latch shims provide cavity width adjustment in 1/16” increments.

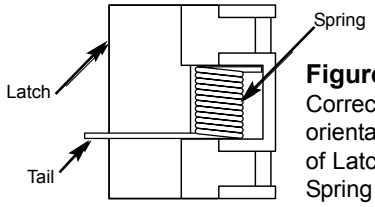

Figure 5. Correct orientation of Latch Spring

5. Place Strike on a flat surface with front of Frame (7) facing up while maintaining orientation for final handing. Insert Asembly Pin (8) into Latch to push out Latch Pivot Shaft (10). Remove Latch (1) containing Assembly Pin.

6. From end of frame remove slider from beneath Guard (11) Figure 6A. Flip slider (reverse ends) and insert through slot in frame, with slider dimple at bottom end of frame. In this position the dimple on slider is at opposite end of frame from coil, at top of frame. The slider in this position maintains the fail secure action, when changing hand.

ACTION (FAIL SECURE OR FAIL SAFE)

The standard action is fail secure and is field changeable by reversing the end of slider during assembly.

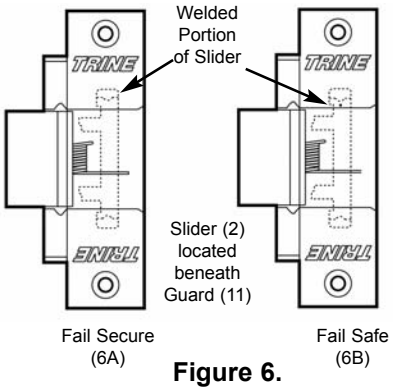

Figure 6.

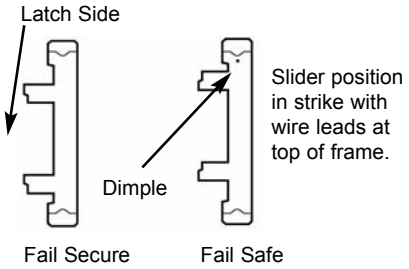

Figure 7.

Hold Latch by satin end side and roll into frame cavity with back end and exposed tip of Spring at the botom of the cavity. Insert tail end of Spring into hole on the side of frame while replacing Latch.

Take Latch Pivot Shaft with crown end in upright position and insert through shaft hole at the top of the frame “in” selected handing. This will push the Assembly Pin through bottom hole.

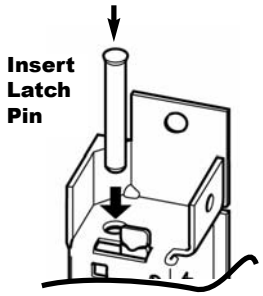

Figure 8.

Place Coil at top of frame, aligning the Coil Bracket threaded hole with the hole in the frame. The Slider tip should rest between the side of Coil and Coil Bracket. Secure Coil to the frame with Coil Assembly Screw (#6).

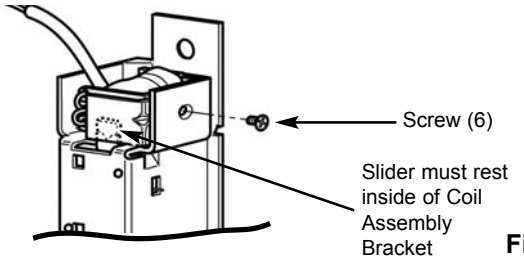

Figure 9.

Check Slider action . Make sure Slider is free to move up and down with no resistance.

Before replacing cover, make sure the unit operates properly by testing with appropriate voltage.

NOTE: Do not attempt to lubricate Electric Strike!!!

Place Strike face down and place wire leads through hole in cover. Attach cover with two screws (4).

INSTALLATION PROCEDURE: - For new or replacement installation in wood or metal jambs.

1. Verify that voltage rating of Electric Strike is compatible with supply voltages of installation. Coil voltages are color coded.

WIRE LEAD	CODE/STRIPE
12AC	Blue/Orange Stripe
12DC	2 Orange Stripe
24AC	Blue/Black Stripe
24DC	2 Black Stripe

2. Using template supplied with Electric Strike, mark door jamb for cutout and screw holes.

NOTE

For proper installation, center line of latchset must be aligned with center line of Electric Strike.

3. Prepare door frame (cut out jamb if required) for Electric Strike. Leave sufficient space for splicing between power supply wiring and Electric Strike wiring.

4. If required, run new wiring to door frame mounting hole. See figure 10 for typical wiring installations. Refer to wiring chart below for correct wire size. (Total wiring length includes routing to door-release push button).

Total Wiring Length to Transformer	12V	24V
Up to 50 Ft	18AWG	20AWG
50 to 150 ft	16AWG	18AWG
150 to 300 ft	14AWG	16AWG
300 to 600 ft	12AWG	14AWG

NOTE

For DC operation, to obtain an audible signal when Electric Strike is energized, install buzzer type BZ-12 for 12VDC operation, or BZ-24 for 24VDC operation (purchased seperately), as illustrated in figure 10.

5. Hold Electric Strike upright (wiring toward top) and determine if handing is required. If so, perform handing procedure.

6. Splice Electric Strike wiring to supply wiring. Secure with wire nuts (supplied).

7. For wood and aluminum door jambs, drill pilot holes for securing Electric Strike to door jamb. For steel and aluminum door jambs, secure Electric Stike to existing mounting tabs.

8. Install Electric Strike into door jamb and secure with flat head mounting screws (supplied).

9. Verify that door operates correctly when Electric Strike is energized and not energized.

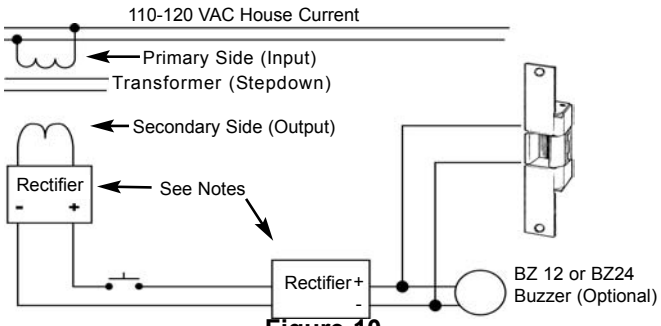

Figure 10.

NOTES:

1. Rectifier can be located either between transformer and push button, or between push button and electric strike.
2. Use either a silicon rectifier or a current-regulating rectifier for converting the AC voltage at the transformer secondary to the DC for operating the electric strike.

ELECTRICAL CHARACTERISTIC CHART

FAIL SECURE (Intermittent Duty) NORMALLY LOCKED

VOLTAGE	CURRENT/AMPS	OHMS	SOUND	DUTY
12VAC	.70	4.5	Buzz	Intermittent
24VAC	.37	18.0	Buzz	Intermittent
12VDC	.28	43.0	Silent	Inter/Cont
24VDC	.15	164.0	Silent	Inter/Cont

TROUBLESHOOTING

Possible Trouble	Probable Cause	Suggested Remedy
Door lockset is not secured by Electric Strike	**1.** Centerline of lockset not properly aligned to centerline of Electric Strike.	Check for proper cutout installation of Electric Strike by referring to template and door frame and lockset position.
	2. Latch does not project properly into cavity of Electric Strike.	Check for excessive gap between door and jamb. Check that lockset is compatible with EN series cavity and requirements. If necessary, use other type of lockset or Electric Strike (refer to Trine Catalog for more information).
	3. Latch Spring broken or missing.	Hold Electric Strike so that wiring faces down and apply pressure to Latch. Verify that Latch releases and that there is sufficient Spring tension to push it to closed positionwhen released. If Latch does not have Spring tension, disassemble Electric Strike and inspect for improperly installed or broken Spring.
Electric Strike does not energize	**1.** Wiring to Electric Strike open or shorted.	Check that electrical connections are secure and that no fraying has occurred during installation. Use voltmeter to verify that Electric Strike is receiving energizing voltage and that wiring is not shorted.
	2. Insufficient voltage to Electric Strike.	Verify that voltage rating on Electric Strike label is compatible with voltage from secondary transformer (12V or 24V). If voltages do not match, either replace transformer or change Electric Strike or Coil Assembly. Use voltmeter to verify that Electric Strike is receiving proper voltage and that wiring is not shorted. If voltage is too low because wire size is too small for length or wiring to Electric Strike (see wiring-length data on previous page), either replace wiring or use transformer with higher VA rating.
	3. Slider does not move when Coil receives proper voltage.	Using an OHM meter, verify that resistance of the Coils matches the chart on page 3. If Coil is open (burned out), verify that transformer for Electric Strike has correct voltage current AC/DC and is wired correctly. AC Coils do not operate at continuous duty, or on DC voltage. Check that Slider (2) floats freely, as follows: Remove Electric Strike from jamb and hold with wires facing up. Test that Strike is locked by applying pressure to Latch. Then turn Strike upside down with wires facing down and verify that Latch opens freely by applying pressure. The locking Slider (#2) **must** float freely for unit to operate properly.
Electric Strike energizes but does not disengage lockset	**1.** Lockset is applying pressure to Electric Strike, preventing Latch from releasing.	Check for proper cutout installation of Electric Strike. Latch requires proper clearance to open correctly and provide path for Lockset Latch to engage Strike. Check that Lockset Latch is not binding to bottom of Strike cavity due to door sag. Check if foam insulation or the materials around door jamb are preventing door from closing flush, causing door to put pressure on Latch.

EN SERIES ELECTRIC STRIKES

Fail Safe / Fail Secure Field Adjustment (on DC units only)

When a unit changed to Fail Safe, the UL fire rating is eliminated.

All operations are performed with the strike in the upright position

1) Remove the back cover and coil as shown. (3-screws). Remove 2 back case (A) Screws, remove coil assembly screw. (B) Remove back cover & coil assembly.

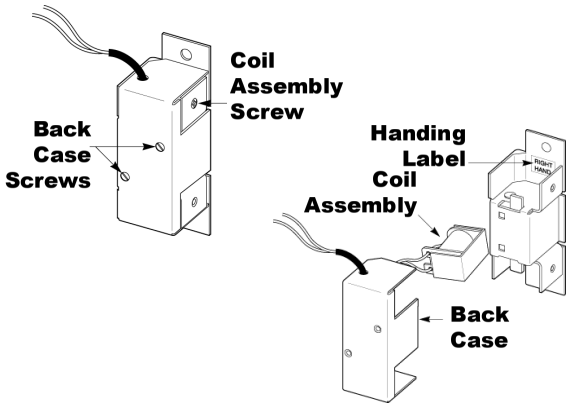

2) Insert assembly pin (provided) to remove latch pin & latch. **Note:** The slider should fall thru the strike body after latch is removed (remove) slider & slider guard.

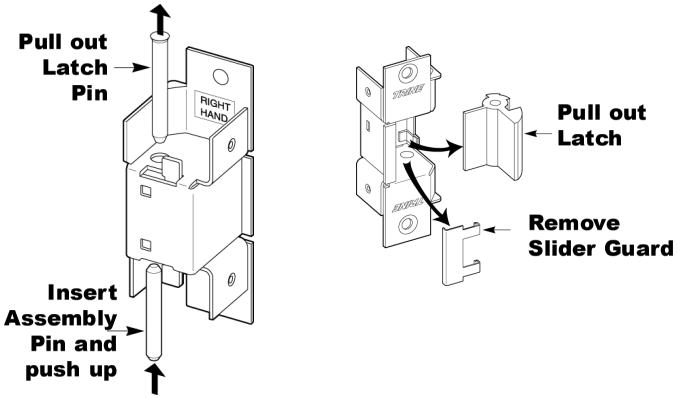

3) Remove the slider from the frame and reverse its ends. Determine handing, and top of strike. Position slider guard as shown. Note: Tabs of slider guard must fall into slots in case with very loose fit.

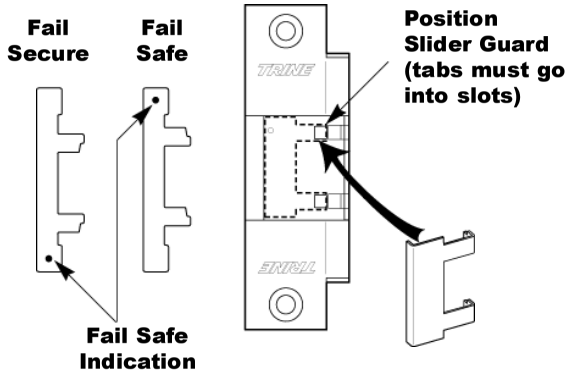

4) Place the slider back in the frame with the fail safe end up by the coil. With slider guard in position insert slider from the top, fail safe side up (as shown).

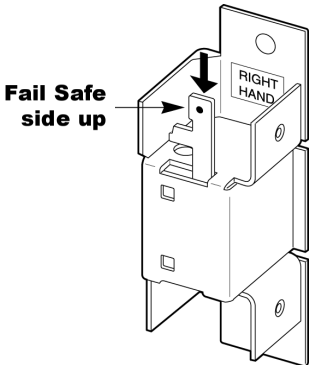

5) Align slider tabs under slider guard, as shown. Hold slider in position with finger from back of case.

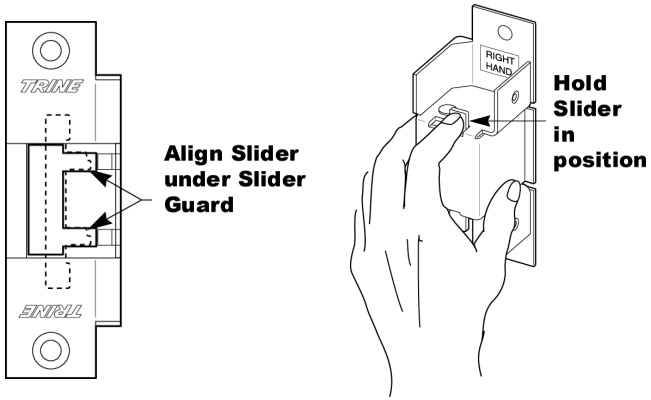

6) Roll the Latch back into cavity making sure the spring tail goes thru the hole in the side of the case as shown.

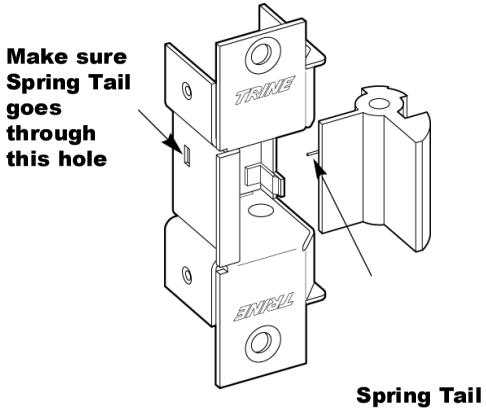

7) From the top insert latch pin, pushing assembly pin out. Latch is now free to open

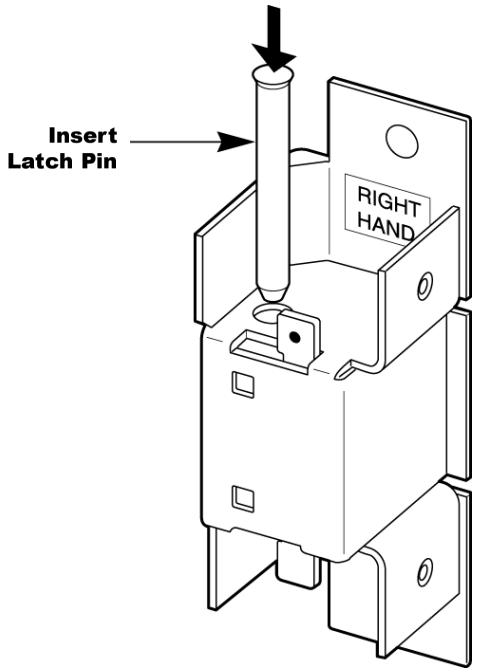

8) Check the action of the slider to make sure the slider can move up & down freely.

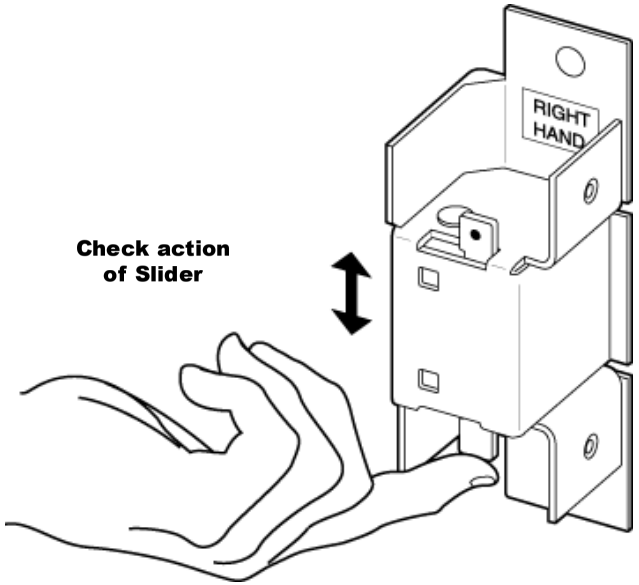

9) Replacing coil assembly.
Note: Slider must be in position between brackets of coil assembly.
Note: Position wires thru slot toward front of the strike. The coil must be flush to case before wscrewing together.

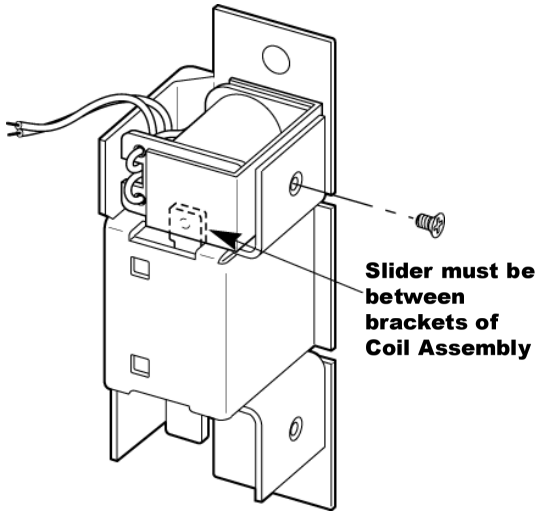

10) Check slider action. Make sure slider is free to move up & down with no resistance.

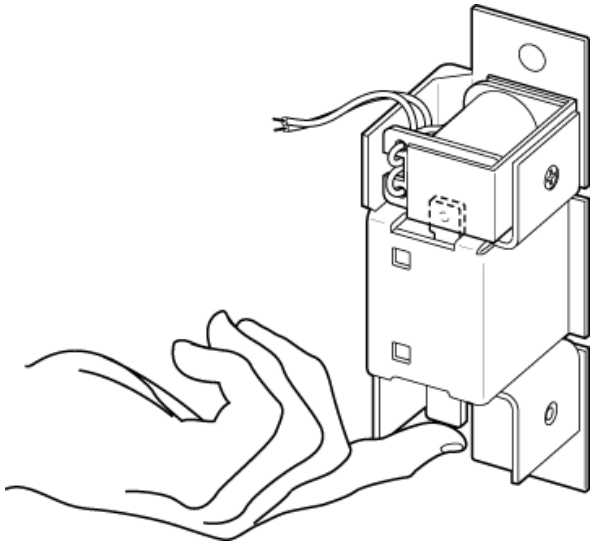

11) Thread wires thru cover as shown.
Replace back cover: Replace 2 screws and tighten.

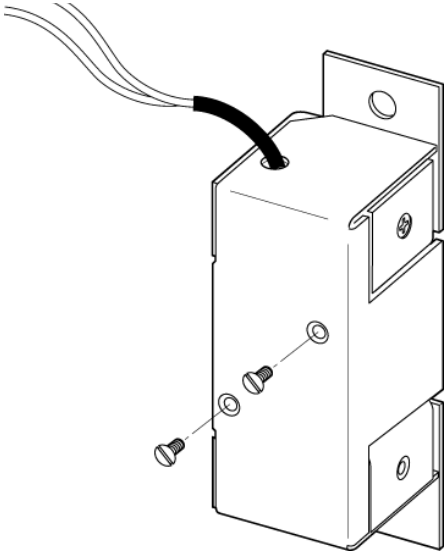

TRINE ACCESS TECHNOLOGY

1440 Ferris Place
Bronx, NY 10461

TEL: 718-829-2332
FAX: 718-829-6405

customerservice@trineonline.com

www.trineonline.com

TRINE ACCESS TECHNOLOGY
1440 Ferris Place, Bronx, NY 10461
PH: 718-829-2332 FAX: 718-829-6405
www.trineonline.com

EN SERIES

SERVICE KIT INSTRUCTIONS *FOR COIL & SPRING REPLACEMENT*

Includes Fail Safe / Fail Secure Field Adjustment (on DC Units)

All operations are performed with the strike in the upright position

1) Remove the back cover and coil as shown. (3-screws). Remove two 1/8" back case
(A) Screws, remove coil assembly screw.
(B) Remove back cover & coil assembly.

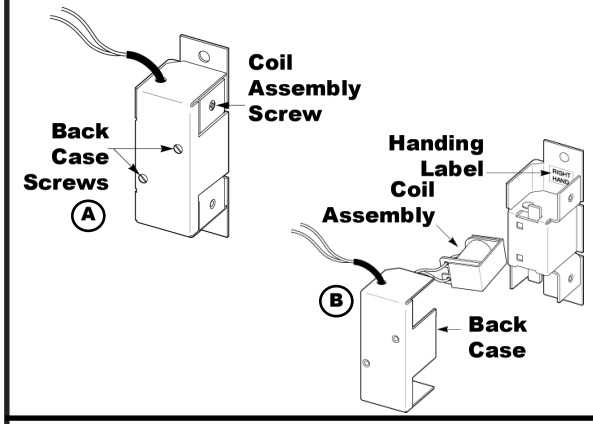

2) Insert assembly pin (provided) to remove latch pin & latch. **Note:** The slider should fall thru the strike body after latch is removed (remove) slider & slider guard.

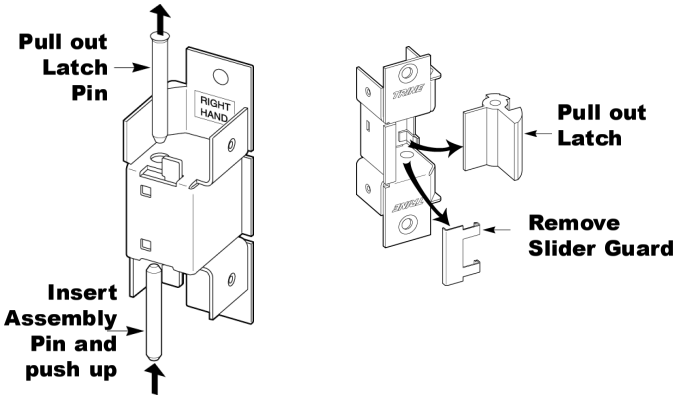

3) ***To change the action,*** remove the slider from the frame and reverse its ends. Determine handing, and top of strike. Position slider guard as shown. Note: Tabs of slider guard must fit into slots in case with very loose fit to change action.

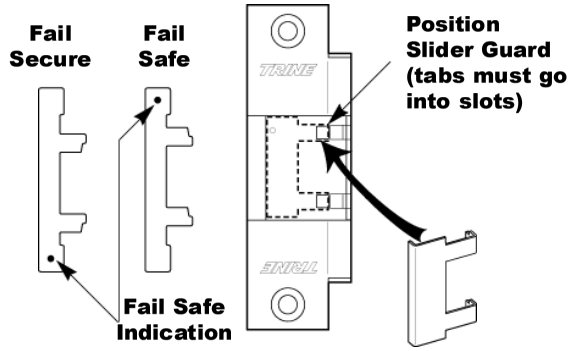

4) Place the slider back in the frame with the fail safe end up by the coil. With slider guard in position insert slider from the top, fail safe side up (as shown).

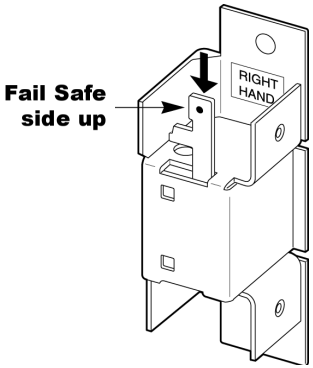

5) ***To service spring***, using replacement kit. Remove assembly pin from latch, releasing spring. Insert replacement spring, positioned as illustrated. Hold spring in position, place assembly pin through latch and spring hole.

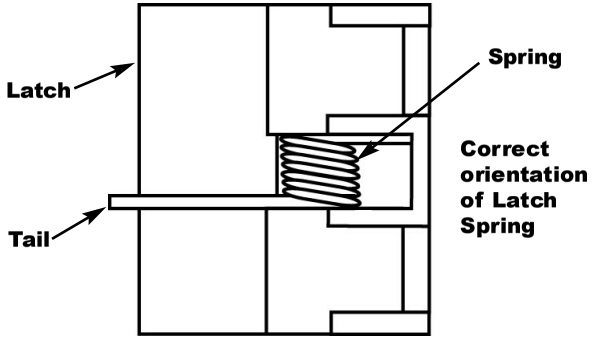

6) Align slider tabs under slider guard, as shown. Hold slider in position with finger from back of case.

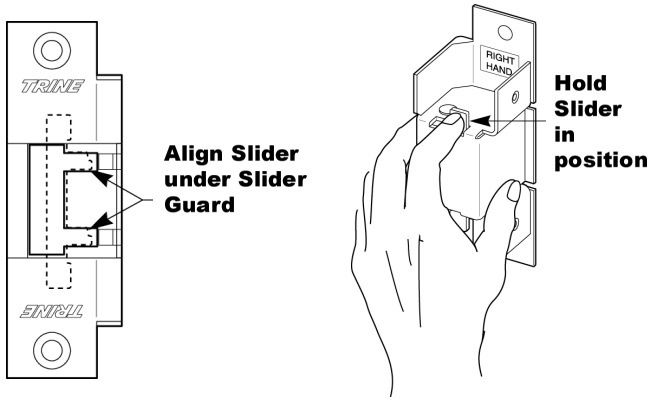

7) Roll the Latch back into cavity making sure the spring tail goes thru the hole in the side of the case as shown.

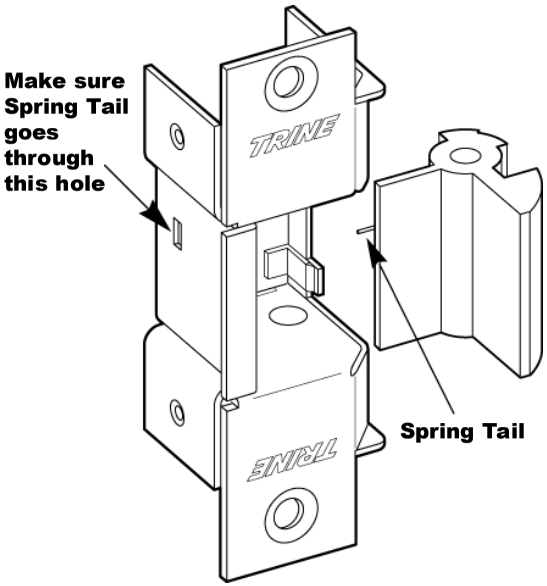

8) From the top insert latch pin, pushing assembly pin out. Latch is now free to open

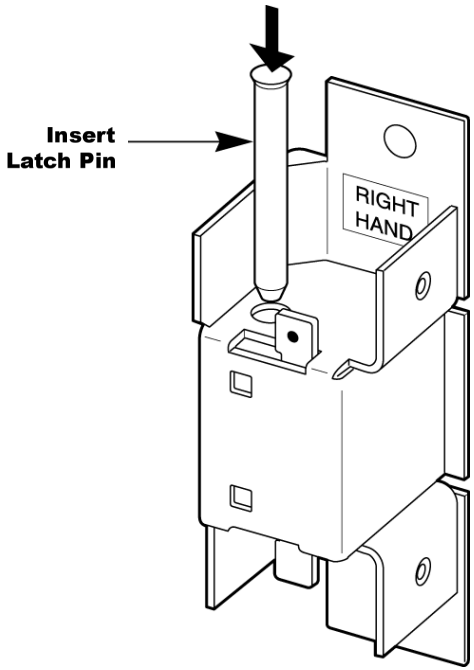

9) Check the action of the slider to make sure the slider can move up & down freely.

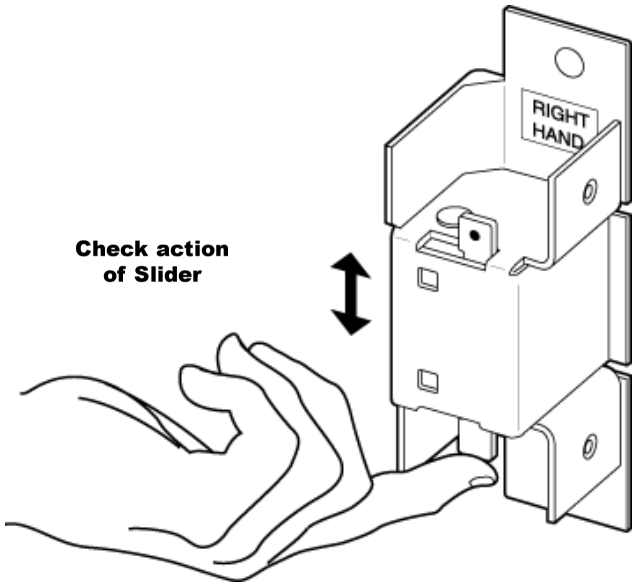

10) Replacing coil assembly.
Note: Slider must be in position between brackets of coil assembly.
Note: Position wires thru slot toward front of the strike. The coil must be flush to case before securing with 1/4” screw.

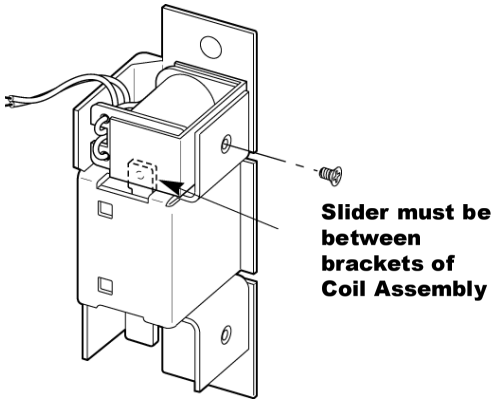

11) Check slider action. Make sure slider is free to move up & down with no resistance.

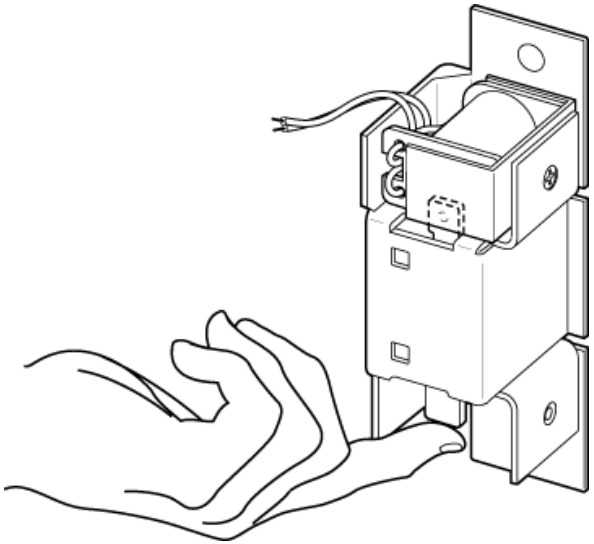

12) Thread wires thru cover as shown. Replace back cover: Replace two 1/8” screws and tighten.

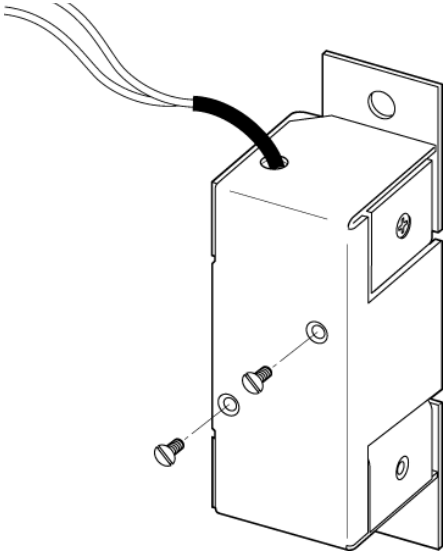

WIRING SCHEMATICS FOR DIFFERENT APPLICATIONS

EN400, EN800, EN850, EN950, EN960 LBSM WIRING SCHEMATIC

FIVE WIRE SCHEMATIC UTILIZING ONE TRANSFORMER

This wiring arrangement uses the least amount of conductors between the Panel and the Frame.

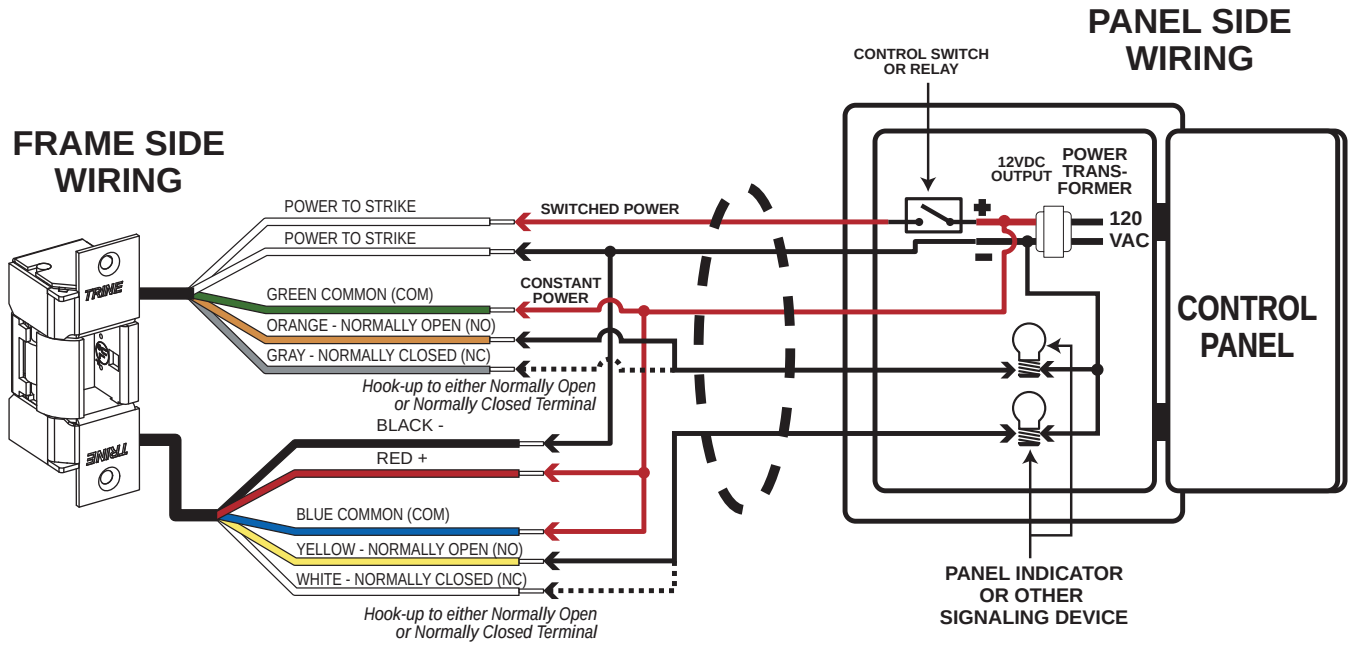

SIX WIRE SCHEMATIC UTILIZING TWO TRANSFORMERS

This wiring arrangement is used to isolate the strike operation, from the LB and/or the SLIDER sensor and power board and the Panel Indicator or Signaling Device.

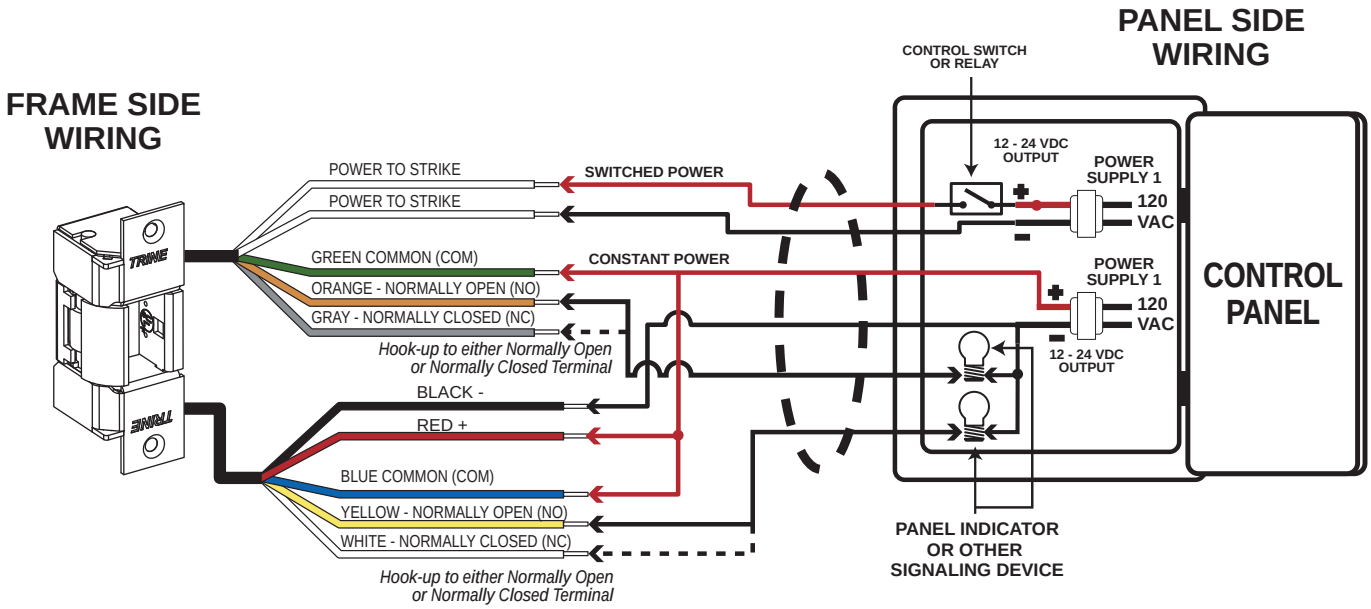

TRINE ACCESS TECHNOLOGY
1440 Ferris Place ● Bronx ● New York ● 10461

WIRING SCHEMATICS FOR DIFFERENT APPLICATIONS

EN 430/435 LBSM WIRING SCHEMATIC

FIVE WIRE SCHEMATIC UTILIZING ONE TRANSFORMER

This wiring arrangement uses the least amount of conductors between the Panel and the Frame.

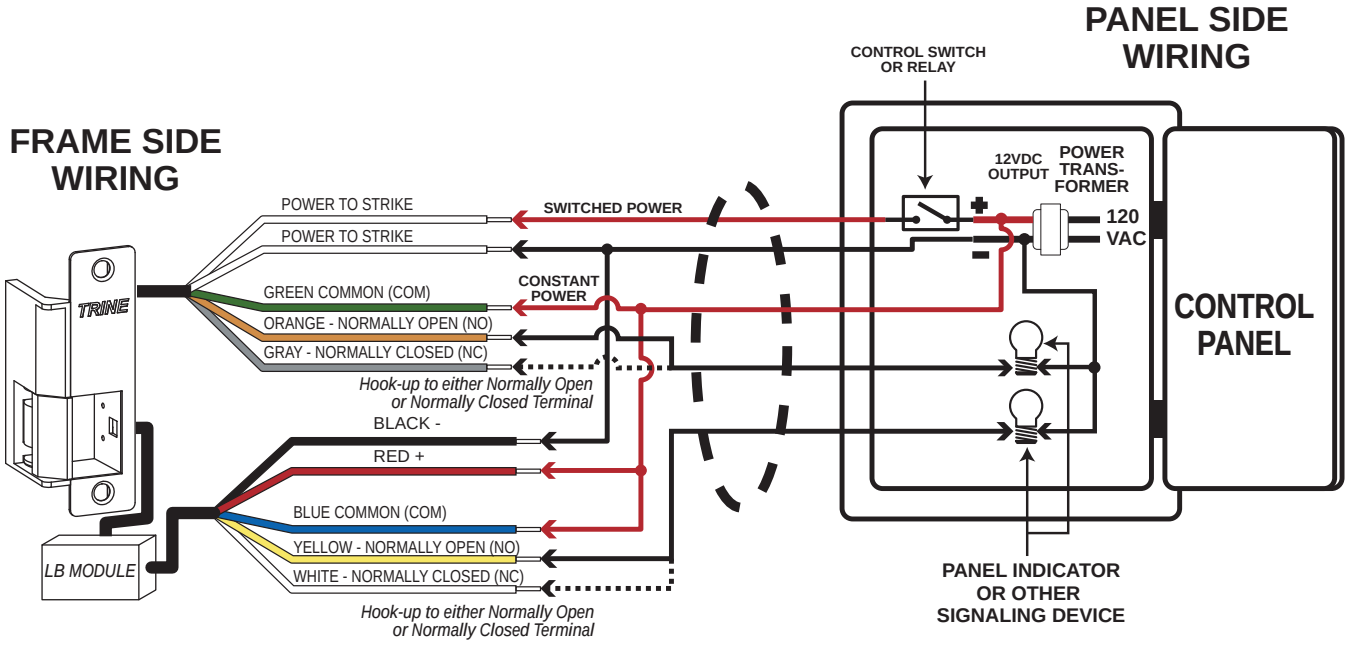

SIX WIRE SCHEMATIC UTILIZING TWO TRANSFORMERS

This wiring arrangement is used to isolate the strike operation, from the LB and/or the SLIDER sensor and power board and the Panel Indicator or Signaling Device.

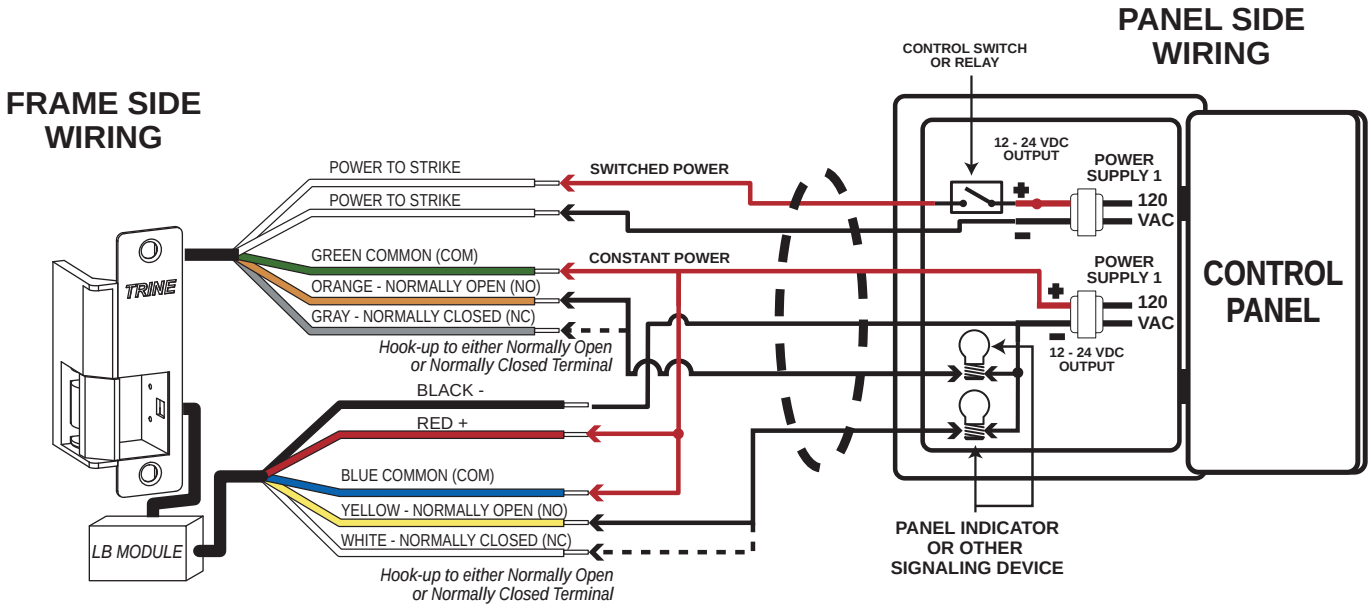

TRINE ACCESS TECHNOLOGY
1440 Ferris Place ● Bronx ● New York ● 10461

TRINE MODEL 340 & 342

DOOR OPERATED SWITCH

To operate lights. Can be used with hinged, accordion, folding doors, sliding doors.

CAUTION: Turn off the main house power before starting electrical connection. Follow local building codes. Consult a licensed electrician if you are uncertain about approved installation procedures.

UNIT IS FIELD SELECTABLE NORMALLY OPEN OR NORMALLY CLOSED

N/C= Light On when Door Open
N/O= Light On when Door is Closed

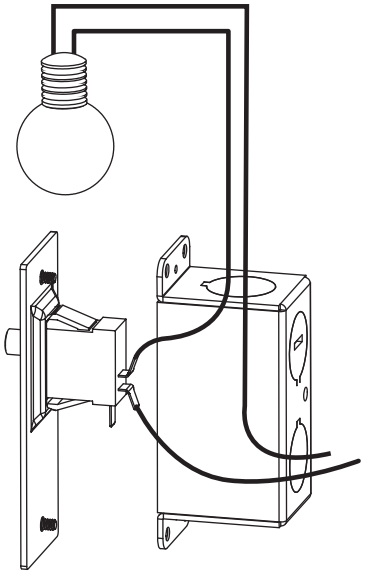

Contact rating- 10 Amps at 120 volts
5 Amps at 250 volts
(DO NOT EXCEED CONTACT RATING)

CONTENTS:
1- UL, CSA listed switch
1- Faceplate
2- Wire leads, UL Listed w/Connectors
2- Flat Head Screws-Brass
4- Wood Screws-Steel

ROUGH OPENING SIZE:

	Width	Height	Depth
340,	1-3/8”	3”	1-1/2”
342,	1-3/16”	2-5/8	2"

COVER

340,	1-1/2”	4”	1/8”
342,	1-1/4”	3-7/8”	1/8”

TRINE MODEL 342

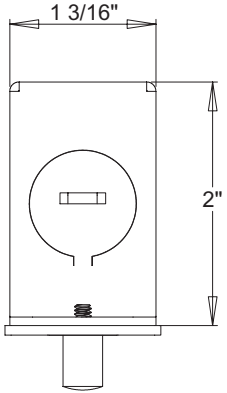

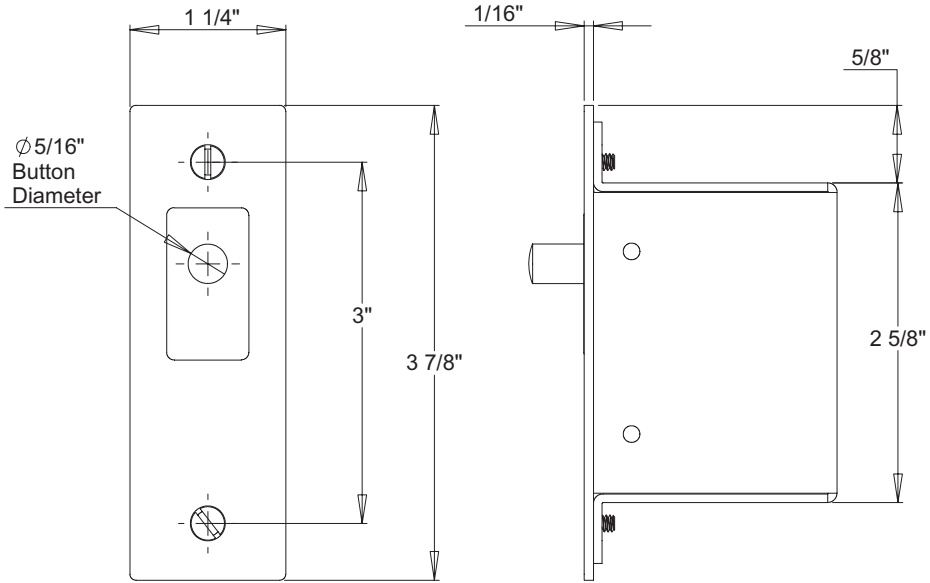

The door switch can be mounted to the switch case with the 2 flat head screws (supplied).

In the event that the light stays on when the door is closed for products 340 and 342, simply rotate the faceplate to adjust the position of the switch. Remove the switch from the cover plate and reverse the plate and re-insert the switch.

Secure the switch box in position using 4 screws or nails. Bring the Romex or BX cable to the case and secure to any of the four knockouts using BX or Romex connectors approved by local codes. To ensure mounting, staple the Romex or BX cables to the wall studs within 6” of the switch case.

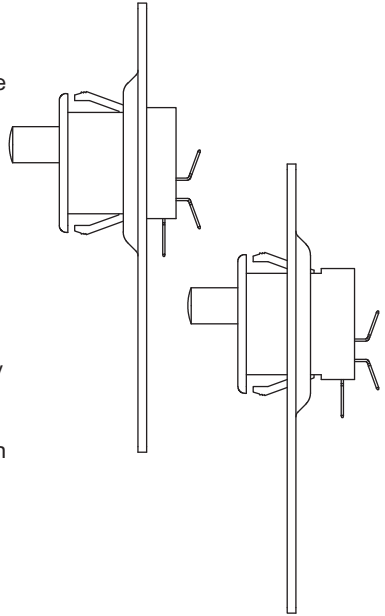

CLOSET LIGHT INSTALLATION

Your switch is ready to install. Simply attach the enclosed lead wires to the tabs that project from the rear of the switch. Then attach one black switch wire to the black house power lead. Attach the other black switch wire to the black lead going to the light. Attach the white house power wire to the white wire that goes to the light. Attach the bare ground wire to the box, using one of the screws, or direct to conduit, if used.

* Insulate all connections with wire nuts or tape approved by local codes.

TRINE MODEL 340

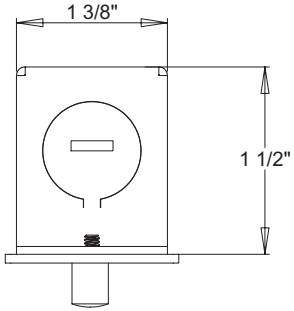

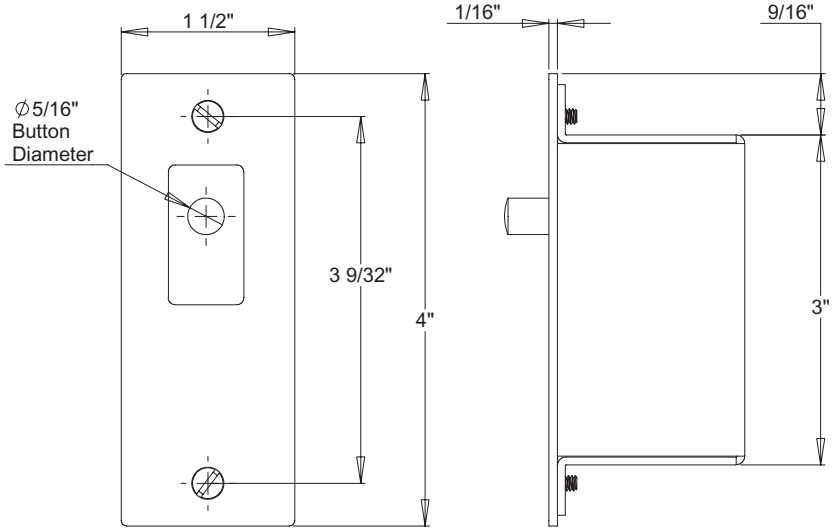

TRINE ACCESS TECHNOLOGY

1440 Ferris Place Bronx NY 10461
Tel:718-829-2332 Fax:718-829-6405
e-mail: customerservice@trineonline.com
www.trineonline.com

MODEL 206-2 Motion Alert & Annunciator
Operating Instruction

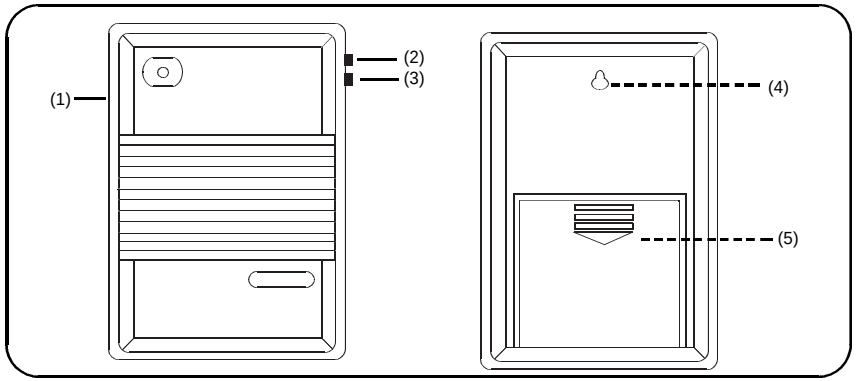

PARTS NAME AND FUNCTION

1. Sensor
2. Volume Switch. Off, Low, High
3. Three Setting Tone Control. Position: 1 - 8 note melody
   2 - 2 repeated tones
   3 - 2 alternating tones
4. Hanging hole, for wall mounting
5. Battery compartment

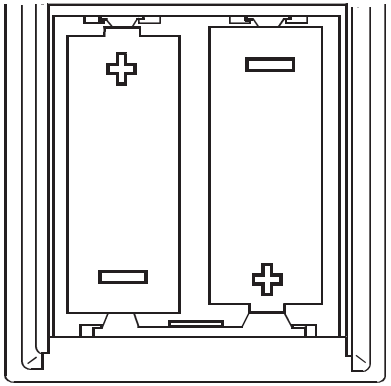

BATTERY INSTALLATION

This unit operates on 3VDC, batteries using 2 pieces UM-2, size "C" 1.5V (R14) batteries or equivalent. Press and slide out the battery door, insert batteries into the battery compartment with correct polarity as indicated, **wrong polarity may damage unit.**

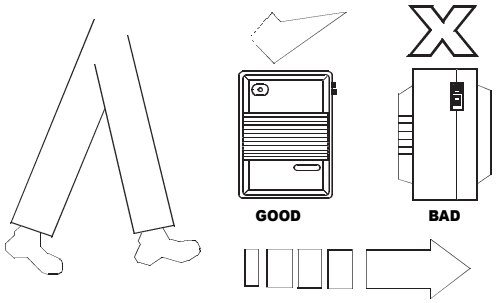

LOCATION OF UNIT

Face the sensor parallel to person's walking direction, stable lighting condition required, not suitable for flashing or too dim light condition. Do not face the sensor towards any moving or vibrating object, otherwise the unit will be mis-triggered.

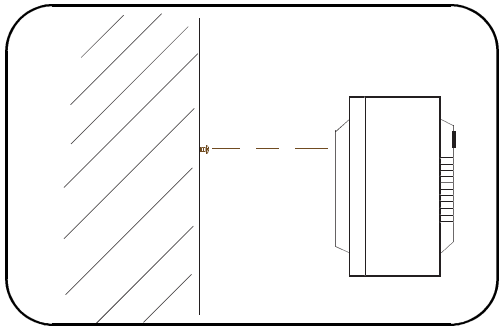

OPERATION

You can place the unit on table or hang it on wall. Slide the Power Switch to the "LOW" or "HIGH" position, melody will sound instantly and then it will stop. When someone passes the sending area, the unit will activate the melody or tones automatically and then stop.

REMARKS: This unit will self-activate when the battery becomes weak; when there are any abnormal functions from the unit, first check the batteries and replace with new ones.

Batteries should be removed during long periods of disuse to avoid possible leakage.

06/02 REV B

TRINE ACCESS TECHNOLOGY

1440 Ferris Place, Bronx, NY 10461
PH: 718-829-2332 FAX: 718-829-6405
customerservice@trineonline.com
www.trineonline.com

206-3 Wireless Entry/Exit Signal Kit

Instruction Sheet

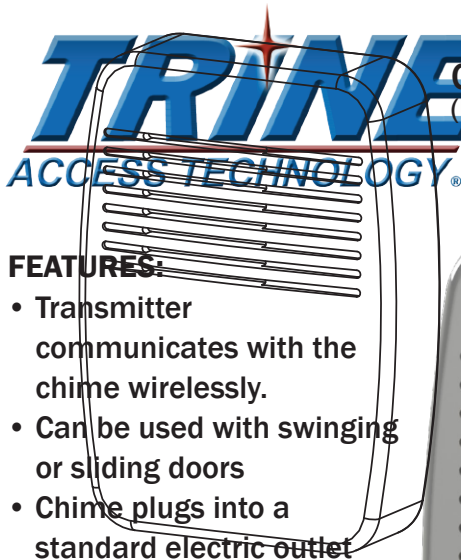

What's Included:

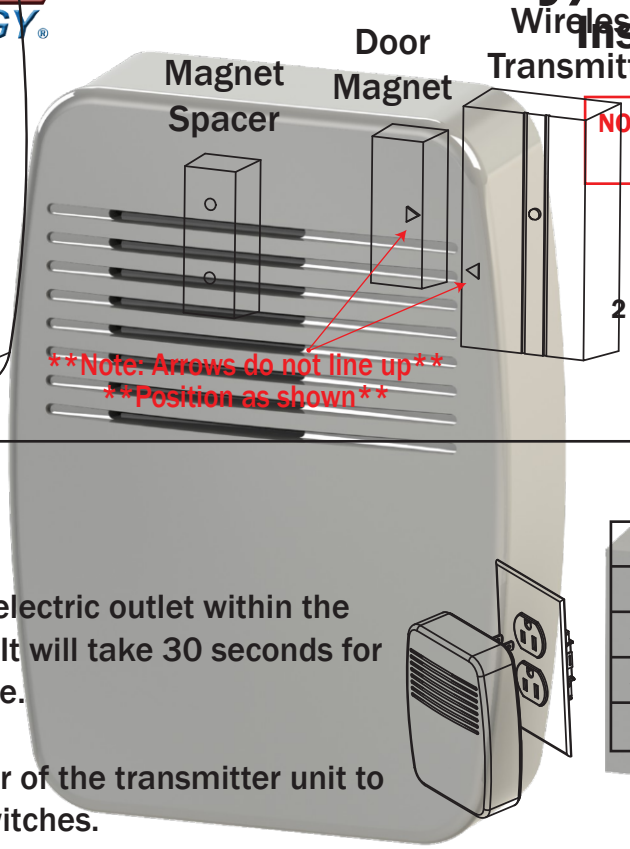

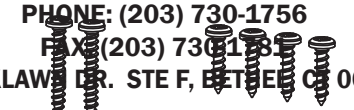

NOTE: This unit is NOT compatible with 206-3 units sold before December, 2014

PHONE: (203) 730-1756
FAX: (203) 730-1785
2 PARKLAWN DR. STE F, BETHEL, CT 06801
customerservice@trineonline.com
www.trineonline.com

FEATURES:

- Transmitter communicates with the chime wirelessly.
- Can be used with swinging or sliding doors
- Chime plugs into a standard electric outlet
- Includes a Door Magnet Spacer and all the mounting screws

Installation:

- Transmitter range: 100'
- Three High Quality Chime tunes
- (1) 12V A23 Battery is included

1. Plug the chime on an electric outlet within the range of the transmitter. It will take 30 seconds for the electronics to initialize.

2. Take off the back cover of the transmitter unit to find the programming switches.

V. 16.0504

3. After the chime initializes, push the "Test Button" on the transmitter for 20 seconds so the chime can pair with the transmitter.

NOTE: This unit is NOT compatible with 206-3 units sold before December, 2014

Note:

A "Swinging" sound from the chime indicates that the transmitter has been successfully mated with the chime.

A single "Ding" from the chime indicates that the transmitter memory was erased.

4. Select the desired chime sound. See the selection chart for the dip switch combinations.

5. Mount the transmitter unit on to the door frame.

6. ** Align the door magnet with the transmitter - see door positioning above** Use the door magnet spacer if the door is recessed too far from the frame.

7. Test the completed installation. Refer to the troubleshooting section if the installation does not work.

Chime Selection Chart

Transmitter	Chime	Tune
Switch 2 - ON	Switch 2 - ON	Ding
Switch 2 - OFF	Switch 2 - OFF	Ding-Dong
Switch 2 - OFF	Switch 2 - OFF	Ding-Dong
Switch 2 - ON	Switch 2 - ON	Westminster

Troubleshooting

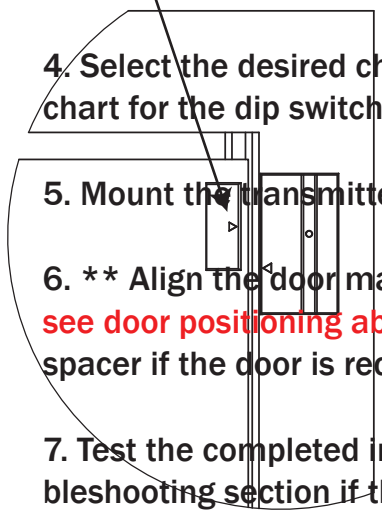

A. Problem: Chime does not ring one time and stop.

1a. Possible Cause: Sensor battery is not installed properly.

1b. Fix: Make sure battery is installed according to the diagram inside sensor.

2a. Possible Cause: Sensor battery is dead.

2b. Fix: Replace sensor battery.

3a. Possible Cause: Chime is not receiving power

3b. Fix: Make sure the plug-in chime has power

4a. Possible Cause: The sensor and chime are not synced

4b. Fix: Re-try syncing process

- Unplug chime
- Ensure switch 1 on both chime and sensor is set to OFF
- Wait 30 Seconds
- Press and hold the "TEST" button inside the sensor within 20 seconds after plugging in chime. When the "Ding-dong" tune is played, the sensor is synced with the chime.

B. Problem: Battery seems okay but the chime does not work after installation.

1a. Possible Cause: Chime or Transmitter is mounted on metal or near metal studs. (metal reduces range of unit)

1b. Fix: Use a 1/4" to 1/2" wooden shim to to move Transmitter away from metal surface. Move Chime to another wall outlet.

2a. Possible Cause: Chime or Transmitter is mounted near concrete (concrete reduces range of unit)

2b. Fix: Move away from concrete

3a. Possible Cause: Chime & Transmitter are installed too far apart (over 100 feet)

3b. Fix: relocate pieces closer to one another.

C. Problem: Chime sounds when not intended.

1. Possible Cause: Chime or Transmitter is receiving interference

2. Fix: Follow A. Problem - 4b. Fix to Unsync the unit

- Follow A. Problem - 4b. Fix Again to Resync the units
- If problem persists move Chime or Transmitter to another location to reduce interference.

206-3 -- Wireless Entry/Exit Signal Kit

Instruction Sheet

NOTE: This unit is NOT compatible with 206-3 units sold before *December, 2014*

PHONE: (203) 730-1756
FAX: (203) 730-1781
2 PARKLAWN DR. STE F, BETHEL, CT 06801
customerservice@trineonline.com
www.trineonline.com

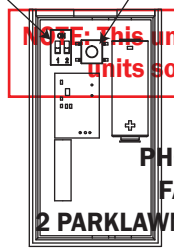

What's Included:

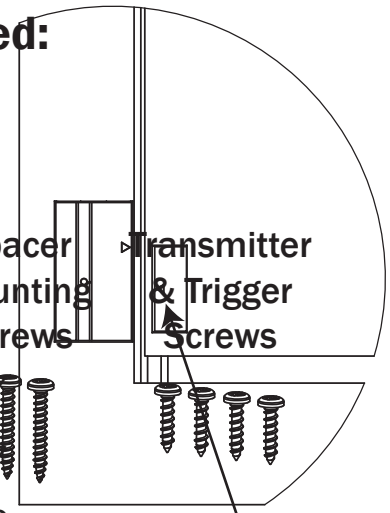

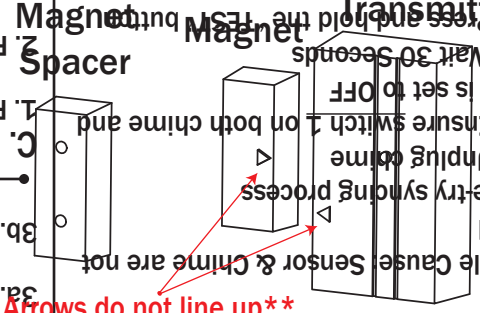

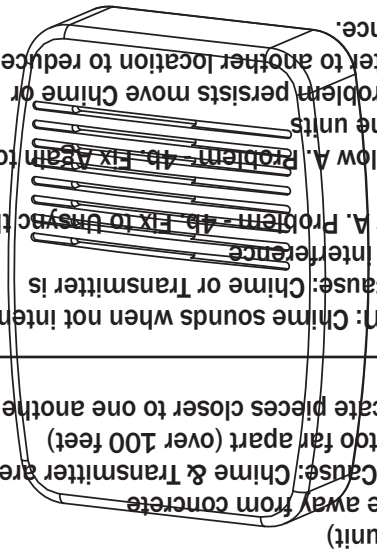

Chime Selection Chart

NOTE: This unit is NOT compatible with 206-3 units sold before December, 2014

Transmitter	Chime	Tune
Switch 2 - ON	Switch 2 - ON	Ding
Switch 2 - OFF	Switch 2 - OFF	Ding-Dong
Switch 2 - OFF	Switch 2 - OFF	Ding-Dong
Switch 2 - ON	Switch 2 - ON	Westminster

For swinging doors align the transmitter arrow to the bottom of the magnet as shown.

Troubleshooting

A. Problem: Chime does not ring one time and stop.

1a. Possible Cause: Sensor Battery is not installed properly.

1b. Fix: Make sure battery is installed according to the diagram inside sensor.

2a. Possible Cause: Sensor battery is dead.

2b. Fix: Replace sensor battery.

3a. Possible Cause: Chime is not receiving power

3b. Fix: Make sure the plug-in chime has power

4a. Possible Cause: Sensor & Chime are not synced

4b. Fix: Re-try syncing process
- Unplug chime
- Ensure switch 1 on both chime and sensor is set to OFF
- Wait 30 Seconds
- Press and hold the "Test" button inside the sensor within 30 seconds after plugging in chime. When the "Ding-dong" tune is played, the sensor is synced with the chime.

****Note: Arrows do not line up****
****Position as shown****

B. Problem: Battery seems okay but the chime does not work after installation

1a. Possible Cause: Chime or Transmitter is mounted on metal or near metal studs. (metal behind wall can cause issues)

1b. Fix: Use a 1/4" to 1/2" wooden shim to move Transmitter away from metal surface. Move Chime to another wall outlet.

2a. Possible Cause: Chime or Transmitter is mounted near concrete. (Concrete reduces range of unit)

2b. Fix: Move away from concrete

3a. Possible Cause: Chime & Transmitter are installed too far apart (over 100 feet)

3b. Fix: relocate pieces closer to one another.

C. Problem: Chime sounds when not intended.

1. Possible Cause: Chime or Transmitter is receiving interference

2. Fix: Follow A. Problem - 4b. Fix to unsync the unit

- Follow A. Problem - 4b. Fix Again to Resync the units

- If problem persists move Chime or Transmitter to another location to reduce interference.

Installation:

1. Plug the chime into an electric outlet within the range of the transmitter. It will take 30 seconds for the electronics to initialize.

2. Take off the back cover of the transmitter unit to find the programming switches.

3. After the chime initializes, push the "Test Button" on the transmitter for 20 seconds so the chime can pair with the transmitter.

Note:

A "Ding-Dong" sound from the chime indicates that the transmitter has been successfully mated with the chime.

A single "Ding" from the chime indicates that the transmitter memory was erased.

4. Select the desired chime sound. See the selection chart for the dip switch combinations.

5. Mount the transmitter unit on to the door frame.

6. ** Align the door magnet with the transmitter - see door positioning above** Use the door magnet spacer if the door is recessed too far from the frame.

7. Test the completed installation. Refer to the troubleshooting section if the installation does not work.

TRINE ACCESS TECHNOLOGY®

FEATURES:

- Transmitter communicates with the chime wirelessly.
- Can be used with swinging or sliding doors
- Chime plugs into a standard electric outlet
- Includes a Door Magnet Spacer and all the mounting screws
- Transmitter range: 100'
- Three High Quality Chime tunes
- (1) 12V A23 Battery is included

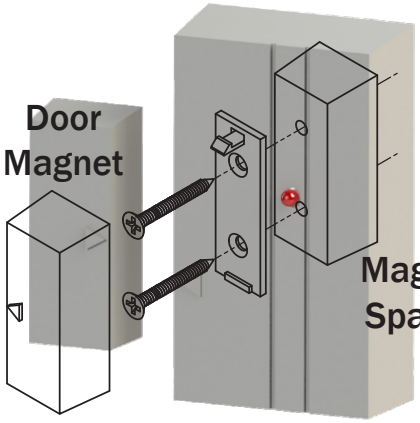

TRINE™
ACCESS TECHNOLOGY

1440 Ferris Place, Bronx, New York 10461
Phone 718-829-2332 Fax 718-829-6405

MODEL 215

Door And Window Entry Alarm

OPERATING INSTRUCTION

FEATURES

1. Easy installation
2. Audible alarm for doors & windows
3. 105dB instant alarm
4. LR44 battery 3 pcs

BATTERY INSTALLATION

This unit operates on 4.5V DC supplied by 3 pieces LR44, batteries. Press and slide out the battery door on the front cover, insert batteries into the battery compartment. Check that the batteries are installed with correct polarity. Wrong polarity may damage the unit.

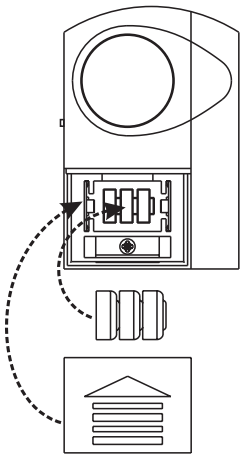

TRINE™
ACCESS TECHNOLOGY
1440 Ferris Place, Bronx, New York 10461
Phone 718-829-2332 Fax 718-829-6405
MODEL 215
Door And Window Entry Alarm
OPERATING INSTRUCTION
FEATURES
1. Easy installation
2. Audible alarm for doors & windows
3. 105dB instant alarm
4. LR44 battery 3 pcs
BATTERY INSTALLATION
This unit operates on 4.5V DC supplied by 3 pieces LR44, batteries. Press and slide out the battery door on the front cover, insert batteries into the battery compartment. Check that the batteries are installed with correct polarity. Wrong polarity may damage the unit.

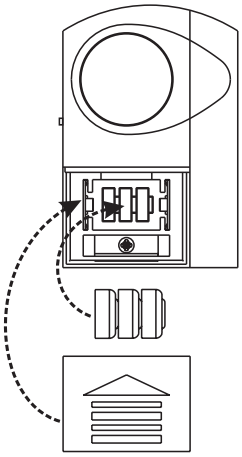

TRINE™
ACCESS TECHNOLOGY
1440 Ferris Place, Bronx, New York 10461
Phone 718-829-2332 Fax 718-829-6405
MODEL 215
Door And Window Entry Alarm
OPERATING INSTRUCTION
FEATURES
1. Easy installation
2. Audible alarm for doors & windows
3. 105dB instant alarm
4. LR44 battery 3 pcs
BATTERY INSTALLATION
This unit operates on 4.5V DC supplied by 3 pieces LR44, batteries. Press and slide out the battery door on the front cover, insert batteries into the battery compartment. Check that the batteries are installed with correct polarity. Wrong polarity may damage the unit.

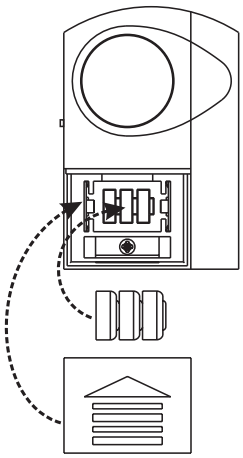

TRINE™
ACCESS TECHNOLOGY
1440 Ferris Place, Bronx, New York 10461
Phone 718-829-2332 Fax 718-829-6405
MODEL 215
Door And Window Entry Alarm
OPERATING INSTRUCTION
FEATURES
1. Easy installation
2. Audible alarm for doors & windows
3. 105dB instant alarm
4. LR44 battery 3 pcs
BATTERY INSTALLATION
This unit operates on 4.5V DC supplied by 3 pieces LR44, batteries. Press and slide out the battery door on the front cover, insert batteries into the battery compartment. Check that the batteries are installed with correct polarity. Wrong polarity may damage the unit.

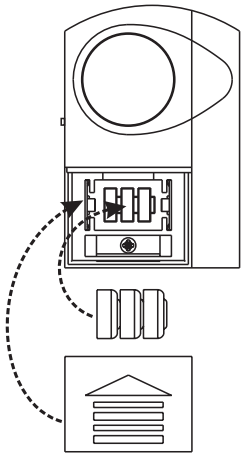

OPERATION

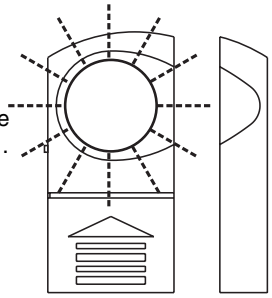

The unit is composed of two parts, the audible transmitter and the magnetic contact. Remove one side of the double-sided tape protection. Press components to door or window using adhesive backing. When someone opens the doors or windows, the unit sends out a continuous alarm. When the switch is moved to the "OFF" postion the alarm stops.

REMARKS

This unit will self-activate frequently when the battery becomes weak; then it's time to replace the batteries.

If the unit functions abnormally, first check the battery and replace as required.

Batteries should be removed during long periods of disuse to avoid possible leakage.

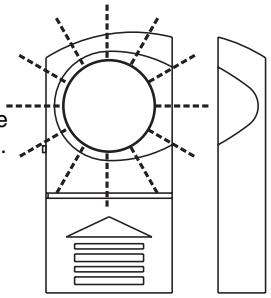

OPERATION
The unit is composed of two parts, the audible transmitter and the magnetic contact. Remove one side of the double-sided tape protection. Press components to door or window using adhesive backing. When someone opens the doors or windows, the unit sends out a continuous alarm. When the switch is moved to the "OFF" postion the alarm stops.

REMARKS
This unit will self-activate frequently when the battery becomes weak; then it's time to replace the batteries.
If the unit functions abnormally, first check the battery and replace as required.
Batteries should be removed during long periods of disuse to avoid possible leakage.

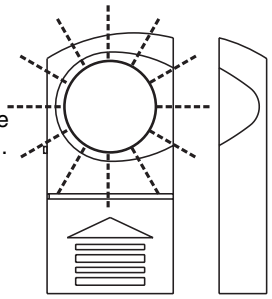

OPERATION
The unit is composed of two parts, the audible transmitter and the magnetic contact. Remove one side of the double-sided tape protection. Press components to door or window using adhesive backing. When someone opens the doors or windows, the unit sends out a continuous alarm. When the switch is moved to the "OFF" postion the alarm stops.

REMARKS
This unit will self-activate frequently when the battery becomes weak; then it's time to replace the batteries.
If the unit functions abnormally, first check the battery and replace as required.
Batteries should be removed during long periods of disuse to avoid possible leakage.

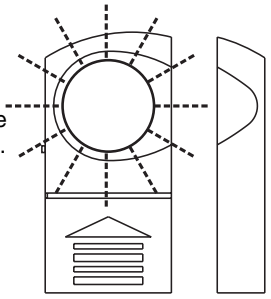

OPERATION
The unit is composed of two parts, the audible transmitter and the magnetic contact. Remove one side of the double-sided tape protection. Press components to door or window using adhesive backing. When someone opens the doors or windows, the unit sends out a continuous alarm. When the switch is moved to the "OFF" postion the alarm stops.

REMARKS
This unit will self-activate frequently when the battery becomes weak; then it's time to replace the batteries.
If the unit functions abnormally, first check the battery and replace as required.
Batteries should be removed during long periods of disuse to avoid possible leakage.

230 (8 Note)/231 (2 Note) Push Button Instructions

Expand Your Wireless Chime System The 2-note (231)/8-note (230) Wireless Push Button works with all Trine Access Technology wireless door chimes. Place at entry doors, gates, garage entrances or anywhere up to a 100 foot range. Also use as a personal pager. Uses a 12-volt alkaline battery (A23 not included); average life, one year. Security codes prevent false triggering.

Mounting the Push Button.

Select an appropriate location near the entrance door making sure the push button does not sit on a metal surface. Using a flat head screwdriver, press the tab on the bottom of the push button, lift the back from the push button and use it as a template to mark the mounting hole locations. Drill two 3/16” diameter holes. Using the screws provided, attach your push button back to surface. Snap push button housing in place on the mounted back.

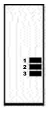

Selecting a Security Code: It is not necessary to change your security code unless false triggering occurs. To change the security code, remove one or more of the connectors (1 through 3) on the push button. You must also remove the corresponding connectors on the chime receiver (1 through 3). If your chime receiver has more connectors (1 through 6), use only the first 3 (1 through 3). It does not matter which connector(s) you remove on the push button. Just be sure to have the same corresponsding numbers as the connector(s) that you will remove from the receiver. If push button and chime connector(s) do not match, your system will not work.

SUGGESTION: Begin by removing one push button connector and one matching chime connector. Test to see if this eliminated the false triggering problem. If false triggering still occurs, repeat process.

TRINE
ACCESS TECHNOLOGY
1440 Ferris Place, Bronx, New York 10461-3699
PH: 718-829-2332 FAX: 718-829-6405
E-mail: customerservice@trineonline.com
www.trineonline.com


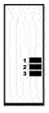
230 (8 Note)/231 (2 Note) Push Button Instructions

Expand Your Wireless Chime System The 2-note (231)/8-note (230) Wireless Push Button works with all Trine Access Technology wireless door chimes. Place at entry doors, gates, garage entrances or anywhere up to a 100 foot range. Also use as a personal pager. Uses a 12-volt alkaline battery (A23 not included); average life, one year. Security codes prevent false triggering.

Mounting the Push Button.
Select an appropriate location near the entrance door making sure the push button does not sit on a metal surface. Using a flat head screwdriver, press the tab on the bottom of the push button, lift the back from the push button and use it as a template to mark the mounting hole locations. Drill two 3/16” diameter holes. Using the screws provided, attach your push button back to surface. Snap push button housing in place on the mounted back.

Selecting a Security Code: It is not necessary to change your security code unless false triggering occurs. To change the security code, remove one or more of the connectors (1 through 3) on the push button. You must also remove the corresponding connectors on the chime receiver (1 through 3). If your chime receiver has more connectors (1 through 6), use only the first 3 (1 through 3). It does not matter which connector(s) you remove on the push button. Just be sure to have the same corresponsding numbers as the connector(s) that you will remove from the receiver. If push button and chime connector(s) do not match, your system will not work.

SUGGESTION: Begin by removing one push button connector and one matching chime connector. Test to see if this eliminated the false triggering problem. If false triggering still occurs, repeat process.

TRINE
ACCESS TECHNOLOGY
1440 Ferris Place, Bronx, New York 10461-3699
PH: 718-829-2332 FAX: 718-829-6405
E-mail: customerservice@trineonline.com
www.trineonline.com


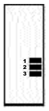
230 (8 Note)/231 (2 Note) Push Button Instructions

Expand Your Wireless Chime System The 2-note (231)/8-note (230) Wireless Push Button works with all Trine Access Technology wireless door chimes. Place at entry doors, gates, garage entrances or anywhere up to a 100 foot range. Also use as a personal pager. Uses a 12-volt alkaline battery (A23 not included); average life, one year. Security codes prevent false triggering.

Mounting the Push Button.
Select an appropriate location near the entrance door making sure the push button does not sit on a metal surface. Using a flat head screwdriver, press the tab on the bottom of the push button, lift the back from the push button and use it as a template to mark the mounting hole locations. Drill two 3/16” diameter holes. Using the screws provided, attach your push button back to surface. Snap push button housing in place on the mounted back.

Selecting a Security Code: It is not necessary to change your security code unless false triggering occurs. To change the security code, remove one or more of the connectors (1 through 3) on the push button. You must also remove the corresponding connectors on the chime receiver (1 through 3). If your chime receiver has more connectors (1 through 6), use only the first 3 (1 through 3). It does not matter which connector(s) you remove on the push button. Just be sure to have the same corresponsding numbers as the connector(s) that you will remove from the receiver. If push button and chime connector(s) do not match, your system will not work.

SUGGESTION: Begin by removing one push button connector and one matching chime connector. Test to see if this eliminated the false triggering problem. If false triggering still occurs, repeat process.

TRINE
ACCESS TECHNOLOGY
1440 Ferris Place, Bronx, New York 10461-3699
PH: 718-829-2332 FAX: 718-829-6405
E-mail: customerservice@trineonline.com
www.trineonline.com


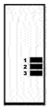
230 (8 Note)/231 (2 Note) Push Button Instructions

Expand Your Wireless Chime System The 2-note (231)/8-note (230) Wireless Push Button works with all Trine Access Technology wireless door chimes. Place at entry doors, gates, garage entrances or anywhere up to a 100 foot range. Also use as a personal pager. Uses a 12-volt alkaline battery (A23 not included); average life, one year. Security codes prevent false triggering.

Mounting the Push Button.
Select an appropriate location near the entrance door making sure the push button does not sit on a metal surface. Using a flat head screwdriver, press the tab on the bottom of the push button, lift the back from the push button and use it as a template to mark the mounting hole locations. Drill two 3/16” diameter holes. Using the screws provided, attach your push button back to surface. Snap push button housing in place on the mounted back.

Selecting a Security Code: It is not necessary to change your security code unless false triggering occurs. To change the security code, remove one or more of the connectors (1 through 3) on the push button. You must also remove the corresponding connectors on the chime receiver (1 through 3). If your chime receiver has more connectors (1 through 6), use only the first 3 (1 through 3). It does not matter which connector(s) you remove on the push button. Just be sure to have the same corresponsding numbers as the connector(s) that you will remove from the receiver. If push button and chime connector(s) do not match, your system will not work.

SUGGESTION: Begin by removing one push button connector and one matching chime connector. Test to see if this eliminated the false triggering problem. If false triggering still occurs, repeat process.

TRINE
ACCESS TECHNOLOGY
1440 Ferris Place, Bronx, New York 10461-3699
PH: 718-829-2332 FAX: 718-829-6405
E-mail: customerservice@trineonline.com
www.trineonline.com


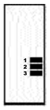
230 (8 Note)/231 (2 Note) Push Button Instructions

Expand Your Wireless Chime System The 2-note (231)/8-note (230) Wireless Push Button works with all Trine Access Technology wireless door chimes. Place at entry doors, gates, garage entrances or anywhere up to a 100 foot range. Also use as a personal pager. Uses a 12-volt alkaline battery (A23 not included); average life, one year. Security codes prevent false triggering.

Mounting the Push Button.
Select an appropriate location near the entrance door making sure the push button does not sit on a metal surface. Using a flat head screwdriver, press the tab on the bottom of the push button, lift the back from the push button and use it as a template to mark the mounting hole locations. Drill two 3/16” diameter holes. Using the screws provided, attach your push button back to surface. Snap push button housing in place on the mounted back.

Selecting a Security Code: It is not necessary to change your security code unless false triggering occurs. To change the security code, remove one or more of the connectors (1 through 3) on the push button. You must also remove the corresponding connectors on the chime receiver (1 through 3). If your chime receiver has more connectors (1 through 6), use only the first 3 (1 through 3). It does not matter which connector(s) you remove on the push button. Just be sure to have the same corresponsding numbers as the connector(s) that you will remove from the receiver. If push button and chime connector(s) do not match, your system will not work.

SUGGESTION: Begin by removing one push button connector and one matching chime connector. Test to see if this eliminated the false triggering problem. If false triggering still occurs, repeat process.

TRINE
ACCESS TECHNOLOGY
1440 Ferris Place, Bronx, New York 10461-3699
PH: 718-829-2332 FAX: 718-829-6405
E-mail: customerservice@trineonline.com
www.trineonline.com


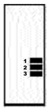
230 (8 Note)/231 (2 Note) Push Button Instructions

Expand Your Wireless Chime System The 2-note (231)/8-note (230) Wireless Push Button works with all Trine Access Technology wireless door chimes. Place at entry doors, gates, garage entrances or anywhere up to a 100 foot range. Also use as a personal pager. Uses a 12-volt alkaline battery (A23 not included); average life, one year. Security codes prevent false triggering.

Mounting the Push Button.
Select an appropriate location near the entrance door making sure the push button does not sit on a metal surface. Using a flat head screwdriver, press the tab on the bottom of the push button, lift the back from the push button and use it as a template to mark the mounting hole locations. Drill two 3/16” diameter holes. Using the screws provided, attach your push button back to surface. Snap push button housing in place on the mounted back.

Selecting a Security Code: It is not necessary to change your security code unless false triggering occurs. To change the security code, remove one or more of the connectors (1 through 3) on the push button. You must also remove the corresponding connectors on the chime receiver (1 through 3). If your chime receiver has more connectors (1 through 6), use only the first 3 (1 through 3). It does not matter which connector(s) you remove on the push button. Just be sure to have the same corresponsding numbers as the connector(s) that you will remove from the receiver. If push button and chime connector(s) do not match, your system will not work.

SUGGESTION: Begin by removing one push button connector and one matching chime connector. Test to see if this eliminated the false triggering problem. If false triggering still occurs, repeat process.

TRINE
ACCESS TECHNOLOGY
1440 Ferris Place, Bronx, New York 10461-3699
PH: 718-829-2332 FAX: 718-829-6405
E-mail: customerservice@trineonline.com
www.trineonline.com

WIRELESS CHIME 232

This package includes (Style of push button and chime may vary from illustration):

- Wireless chime
- Wireless push button w/battery
- Mounting hardware pack

You'll need to buy 2 "C" alkaline batteries for the chime. In typical use alkaline batteries will last up to one year.

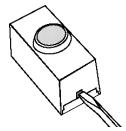

1. **Install alkaline type A23 12 volt push button battery.** Remove back of case by pushing in tab on bottom with a small screwdriver. Make sure battery is oriented properly.
2. **Open chime case.** Press in catch on bottom of chime and lift the case open.

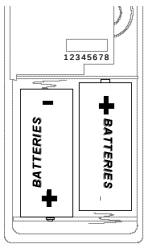

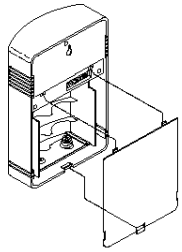

3. **Install 2 alkaline "C" batteries.** Make sure batteries are oriented properly.
4. **Test Range.** Temporarily position chime and push button where you want them mounted. Press push button to verify chime and push button work properly. If chime does not sound, see Troubleshooting.
5. **Mount push button and chime.**

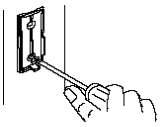

Use either screws or double sided tape to mount push button.
To mount with scrws, remove back of case by pushing in tab on bottom with a small screwdriver.
Attach back of case to door jamb or wall. Snap front of push button on.
When attaching push button using double sided tape, make sure the surface of the door jamb or wall is clear.
Position button with label "Install This End Down".
Case Style: Chime can be mounted by using 1 screw with keyhole.
Snap battery access door firmly in place before mounting.

Code and Tune Settings - *Code Settings*

Note: **Most installations will not require you to change any jumpers on your chime and push button.**
The push button and chime communicate by using a code that can be changed by removing and/or adding jumpers on both the push button and chime. The code is factory set; however, there are 128 selectable codes that allow you to expand your system and prevent outside interference. Other wireless products may cause interference and the system may not function properly. Follow the instructions below for setting a new code.

1. Open the cases and locate the jumpers on both the push button and chime.
2. The push button and chime both have eight different jumper locations. The jumper positions 1 thru 7 are used for setting the code.
3. To change the code, add and/or remove jumpers as needed. **It is recommended to only change one jumper at a time and then check to see if system is functioning properly**. Note: Jumpers in positions 1 thru 7 must be exactly the same for both the push button and chime for this system to function.

Tune Setting

Your wireless chime has two different selectable tunes: **Ding** (One note), **Ding-Dong** (two note). The factory setting is for the Ding-Dong tune. This tune can be changed by following the instructions below:

- **Ding** (one note tune)
  Push button: Add a jumper to location 8
- **Ding-Dong** (two note tune)
  Push button: Remove jumper from location 8
  Chime: Remove jumper from location 8

Note: All models have both front and back door tune capabilities. We recommend the back door use the **Ding** tune and the front door use the **Ding Dong** tune.

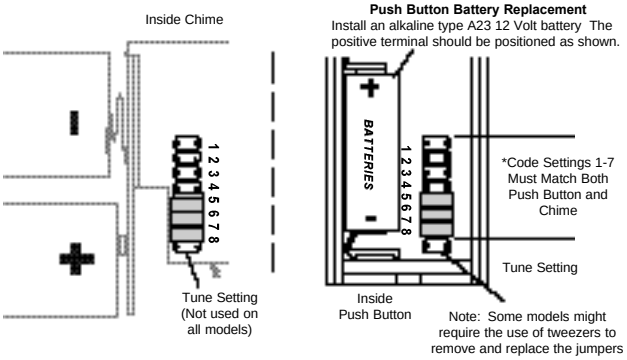

Troubleshooting

Chime doesn't sound:

- Make sure push button and chime codes are the same
- Check orientation of push button battery
- Check charge of push button and chime batteries, replace if necessary.

Batteries seem OK, but the chime doesn't work when installed:

- Don't mount chime or push button on metal or near metal studs. This reduces the transmitter range. Use 1/4" to 1/2" (6 to 13 mm) wood shims to move chime or push button off metal surface.
- Concrete floors may reduce range. Move chime away from floor.
- Try locating chime closer to push button.

The range of the wireless chime can vary with location, temperature and battery condition.

Regulartory Information

This device complies with Part 15 of the FCC Rules and RSS-20 of Industry Canada. Operation is subject to the following conditions: (1) this device may not cause harmful interference, and (2) this device must accept any interference received, including interference that may cause undesired operation.
The user is cautioned that changes or modifications not expressly approved by the party responsible for regulatory compliance could void the user's authority to operate equipment

FCC, IC RECOGNIZED

ONE YEAR LIMITED WARRANTY

TRINE ACCESS TECHNOLOGY reserves the right to discontinue and to change specifications at any time without notice incurring any obligation to incorporate new reatures in previously sold products.

1440 Ferris Place • Bronx • NY • 10462
Tel: 718-829-2332 • Fax: 718-829-6405
web-site: www.trineonline.com
E-mail: customerservice@trineonline.com

TRINE ACCESS TECHNOLOGY ™

REV53002

WIRELESS PLUG-IN CHIME 233

This package includes (Style of push button and chime may vary from illustration):

- Wireless chime
- Wireless push button w/battery
- Mounting hardware pack

You'll need to buy 2 "C" alkaline batteries for the chime. In typical use alkaline batteries will last up to one year.

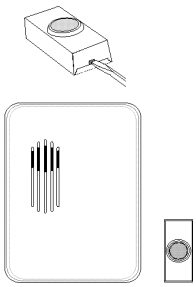

1. **Install alkaline type A23 12 volt push button battery.** Remove back of case by pushing in tab on bottom with a small screwdriver. Make sure battery is oriented properly.

2. **Plug in wireless chime.**
   To reduce the risk of electrical shock, this equipment has a polarized plug (one blade is wider than the other). This plug will fit in a polarized outlet only one way. If the plug does not fit fully in the outlet, reverse the plug. If it still does not fit, contact a qualified electrician to install the proper outlet. Do not change the plug in any way.

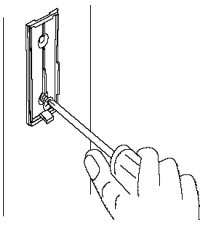

3. **Test Range.** Temporarily position chime and push button where you want them mounted. Press push button to verify chime and push button work properly. If chime does not sound, see Troubleshooting.

4. **Mount push button**

Use either screws or double sided tape to mount push button.
To mount with screws, reemove back of case by pushing in tab on bottom with a small screwdriver.
Attach back of cse to door jamb or wall Snap front of push button on.
Position push button with label "This End Down".
When attaching push button using double sided tape, make sure the surface of the door jamb or wall is clean.

Code and Tune Settings - *Code Settings*

Note: **Most installations will not require you to change any jumpers on your chime and push button.**
The push button and chime communicate by using a code that can be changed by removing and/or adding jumpers on both the push button and chime. The code is factory set; however, there are 128 selectable codes that allow you to expand your system and prevent outside interference. Other wireless products may cause interference and the system may not function properly. Follow the instructions below for setting a new code.

1. Unplug wireless chime.
2. Open the cases and locate the jumpers on both the push button and chime
3. The push button and chime both have eight different jumper locations. The jumper positions 1 thru 7 are used for setting the code.
4. To change the code, add and/or remove jumpers as needed. **It is recommended to only change one jumper at a time and then check to see if system is functioning properly**. Note: Jumpers in positions 1 thru 7 must be exactly the same for both the push button and chime for this system to function.

Tune Setting

Your wireless chime has two different selectable tunes: **Ding** (One note), **Ding-Dong** (two note). The factory setting is for the Ding-Dong tune. This tune can be changed by following the instructions below:

- **Ding** (one note tune)
  Push button: Add a jumper to location 8
- **Ding-Dong** (two note tune)
  Push button: Remove jumper from location 8
  Chime: Remove jumper from location 8

Note: All models have both front and back door tune capabilities. We recommend the back door use the **Ding** tune and the front door use the **Ding Dong** tune.

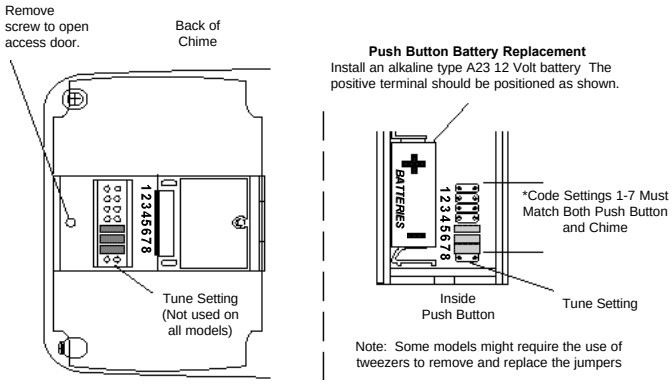

Troubleshooting

Chime doesn't sound:

- Make sure push button and chime codes are the same
- Check orientation of push button battery
- Check charge of push button battery, replace if necessary.

Batteries seem OK, but the chime doesn't work when installed:

- Don't mount chime or push button on metal or near metal studes. This reduces the transmitter range. Use 1/4" to 1/2" (6 to 13 mm) wood shims to move chime or push button off metal surface.
- Try locating chime closer to push button.

The range of the wireless chime can vary with location, temperature and battery condition.

Regulartory Information

This device complies with Part 15 of the FCC Rules and RSS-20 of Industry Canada. Operation is subject to the following conditions: (1) this device may not cause harmful interference, and (2) this device must accept any interference received, including interference that may cause undesired operation.
The user is cautioned that changes or modifications not expressly approved by the party responsible for regulatory compliance could void the user's authority to operate equipment.

FCC, IC, UL, CUL Listed

ONE YEAR LIMITED WARRANTY

TRINE ACCESS TECHNOLOGY reserves the right to discontinue and to change specifications at any time without notice incurring any obligation to incorporate new reatures in previously sold products.

1440 Ferris Place • Bronx • NY • 10462
Tel: 718-829-2332 • Fax: 718-829-6405
web-site: www.trineonline.com
E-mail: customerservice@trineonline.com

TRINE ACCESS TECHNOLOGY ™

REV53002

Model 235

WIRELESS MECHANICAL BATTERY OPERATED CHIME

This package includes (Style of push button and chime may vary from illustration):

- Wireless chime
- Wireless push button w/ A-23 battery
- Hardware pack

This chime requires 4 "C" alkaline batteries (not included). In typical use, alkaline batteries will last up to 2 1/2 years.

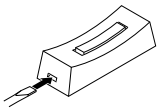

Figure 1

1. Install alkaline type A23 12 volt push button battery (included). Remove back of case by pushing in tab on bottom with a small screwdriver. Make sure battery is oriented properly.

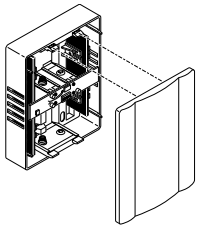

Figure 2

2. Remove chime cover. Pull firmly as shown in Figure 2.

3. Install 4 alkaline "C" batteries in chime. Make sure batteries are oriented with proper polarity as shown in Figure 3.

4. Test range. Temporarily position chime and push button where you want them mounted. Press push button to verify chime and push button work properly. If chime does not sound, see Troubleshooting.

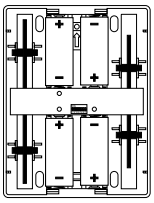

Figure 3

5. Mount push button and chime.

Use either screws or double sided tape to mount push button.

Observe orientation of back plate by note on case "Install This End Down" before mounting.

To mount with screws, remove back of case by pushing in tab on bottom with a small screwdriver (see Figure 1).

Attach back of case to door jamb or wall. Snap front of push button on.

When attaching push button using double sided tape, make sure the surface of the door jamb or wall is clean.

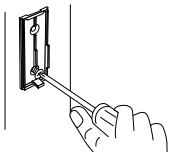

Figure 4

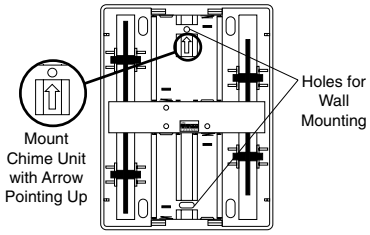

Figure 5

Attach chime unit using two screws and wall anchors provided. Insert screws into screw holes as shown in Figure 5. Note: Using arrow inside chime unit as a guide, mount chime with arrow pointing up (see Figure 5). Snap cover onto chime base.

Code and Tune Settings

Code Settings

Note: Most installations will not require you to change any code settings on your chime and push button.

The push button and chime communicate by using a code that can be changed by changing dip switch positions or removing and/or adding jumpers on both the push button and chime. The code is factory set; however selectable codes that allow you to expand your system and prevent outside interference. Other wireless products may cause interference and the system may not function properly. Follow the instructions below for setting a new code.

1. Open the cases and locate the jumpers on the push button and the dip switches on the chime (see Figure 6).
2. The push button has eight different jumper locations and the chime has seven dip switches. The jumper positions 1 through 7 are used for setting the code.
3. To change the code, add and/or remove jumpers and change dip switch positions as needed. It is recommended to only change one code position at a time and then check to see if system is functioning properly Code positions 1 through 7 must be exactly the same for both the push button and chime for this system to function.

Note: Unit will come factory set with jumpers in locations 5, 6, and 7 on the push button and dip switch locations 5, 6, and 7 in the "ON" position (see Figure 6).

Tune Settings

Your wireless chime has different selectable tunes: **Dong** (one note) and **Ding-Dong** (two note). The factory setting is for the Ding-Dong tune. This tune can be changed by following the instructions below.

- **Dong** (one note tune)
  Push button: Add jumper to location 8.
- **Ding-Dong** (two note tune)
  Push Button: Remove jumper from location 8.

Note: We recommend the back door use the **Dong** tune and the front door use the **Ding-Dong** tune. Models that include two push buttons will come factory set for front and back doors. Decals on the rear of the push button will indicate its setting.

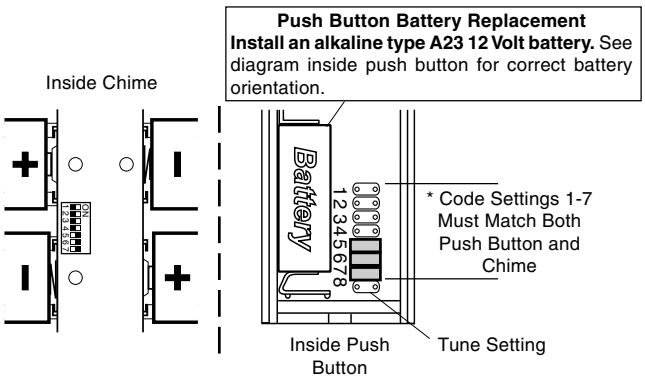

Figure 6

Note: Some models might require the use of tweezers to remove and replace the jumpers.

Troubleshooting

Low Battery Indicator: When the push button designated for the "Ding-Dong" tone is pressed, only a "Dong" note will play when battery power is low in chime unit.

Chime does not sound:

- Make sure push button and chime codes are the same (See pages 2 and 3).
- Check orientation of push button and chime batteries (See page 3).
- Check charge of push button and chime batteries, replace if necessary.

Batteries seem OK, but the chime does not work when installed:

- Do not mount chime or push button on metal or near metal studs. This reduces the transmitter range. Use 1/4" to 1/2" (6 to 13 mm) wood shims to move chime or push button off metal surface.
- Concrete floors may reduce range. Move chime away from floor.
- Try locating chime closer to push button.

The range of the wireless chime can vary with location, temperature, and battery condition.

Regulatory Information

This device (WB-94A-TX or WB-97-TX/TR-6505-RX) complies with Part 15 of the FCC Rules and RSS-210 of Industry Canada. Operation is subject to the following two conditions: (1) this device may not cause harmful interference, and (2) this device must accept any interference received, including interference that may cause undesired operation.

The user is cautioned that changes or modifications not expressly approved by the party responsible for regulatory compliance could void the user's authority to operate the equipment.

FCC, IC Approved.

ONE YEAR LIMITED WARRANTY

TRINE ACCESS TECHNOLOGY reserves the right to discontinue and to change specifications at any time without notice incurring any obligation to incorporate new features in previously sold products.

1440 Ferris Place, Bronx NY, 10462 Tel: 718-829-2332 Fax: 718-829-6405
Web Site: www.trineonline.com E-mail: customerservice@trineonline.com

TRINE™ ACCESS TECHNOLOGY

TRINE
ACCESS TECHNOLOGY

DOOR CHIME INSTALLATION INSTRUCTIONS

NEW INSTALLATION

PLACEMENT OF THE COMPONENTS.
Spend some time planning the location of all the parts in your door chime system.
DOOR CHIMES are best mounted in a central location so they can be heard throughout the home. If it is to be a multiple chime installation, you may also want to plan for central locations, e.g., entryways, hallways second floor landings, etc.

For best appearance, locate your chime 78" above the floor line.

Door chimes are decorative, as well as functional. Place them at eye level as you would any picture or artwork.

HOW TO

TO CHECK PUSH BUTTON OPERATION remove button from wall. Disconnect both wires from button. Touch exposed wires together. If your chime sounds, the push button is defective. Replace with a new push button.

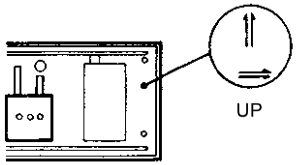

PROPER CHIME MOUNTING
Door chimes can be mounted in either a horizontal or vertical position.

TO CHECK TRANSFORMER OPERATION, check to see that the fuse or circuit breaker is on. Then touch the two low voltage transformer terminal screws with a low voltage meter which should read no less than 13 volts. If you do not have a meter, touch the two screws with a screwdriver. A small spark indicates the transformer is operating. If no spark is evident, replace the transformer with another transformer.

TO CHECK CHIME OPERATION disconnect one wire from the chime. Have someone hold down the push button and touch the disconnected wire to the center screw terminal of the chime. A small spark will indicate the wiring and transformer are working

Most doorbells, buzzers or small chimes in use today operate on a 10 volt transformer which should be replaced with a 16 volt-10 watt type for superior sound volume

Product specification subject to change without notice

NEW CHIME INSTALLATIONS REQUIRE TRANSFORMERS

WARNING: TURN OFF HOUSE POWER

BEFORE STARTING YOUR INSTALLATION OF YOUR TRANSFORMER. FAILURE TO DO SO MAY RESULT IN DANGER FROM ELECTRICAL SHOCK.

TRANFORMERS should be mounted on or near a junction box. They can also be mounted to the electrical service panels. Junction boxes utility rooms, crawl spaces, or basements are preferred. Avoid attack locations whenever possible.

Chimes operate best with a 16 volt, 10 watt, AC transfomer (no.522). For multiple chime operation we recommend using a 16 volt, 20 watt, AC transfomers (Nos 598). Failure to use a tansformer with adequate capacity will result in loss of sound or may result in the system being inoperative.

PUSH BUTTONS are usually mounted in the same area of frontal reach as the door controls, at height of 36" to 44" above the doorsill.

NEW INSTALLATIONS

1. Locate chime at eye level so it can be seen as well as heard.
2. **WARNING**
FOR TRANSFORMER OPERATION ONLY, TRUN OFF HOUSE POWER BEFORE STARTING INSTALLATION. FAILURE TO DO SO MAY RESULT IN DANGER FROM ELECTRICAL SHOCK.
3. Mount a (no. 522) transformer to a conventinet junction box (attic location ot recommended) or circuit breaker box.
4. Connect transformer wires to house power, one black transformer wire to one black house lead, the other black transformer wire to teh white house lead. Using electrical tape and/or wire nuts, insulate each connection (separately). Attach green transformer wire to junction box, to ground wire or clamp to conduit.
5. Follow wiring diagram and run standard chime/bell wires from transformer and push button(s) terminals to chime. Label all wires - Front, Rear, Transformer
6. Pull wires through holes in chime base.
7. Use provided screws to mount base to wall
8. Connect transformer and push button wires to terminal screws marked Front, Transformer and Rear on the chime base.
9. Place chime cover securely over the base.
10. Restore power. Press push button(s) to test chime.

FOR REPLACEMENT INSTALLATION

(not requiring a transformer change).

For replacement installatin requiring a new transformer, follow additional steps 2 through 4 of New Installations).

1. Remove cover from existing chime and disconnect wires from terminal screws. Label all wires (Front, Transformer, Ream) as you remove them.
2. Remove existing chime base from wall.
3. Pull wires through holes in new chime base.
4. Use provided screws to mount base to wall.
5. Connect wires to terminal screws marked Front, Transformer and Rear on the chime base.
6. Place chime cover securely over the base.

NOTE: FOR LOUDER SOUNDING CHIME PERFORMANCE, A 20VA TRANSFORMER IS RECOMMENDED (MODEL 598)

FRONT AND REAR DOOR INSTALLATION OF DIAGRAM OF MULTIPLES CHIMES

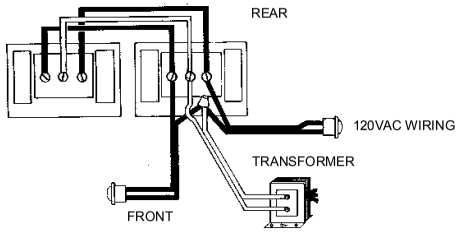

FRONT AND REAR DOOR INSTALLATION DIAGRAM

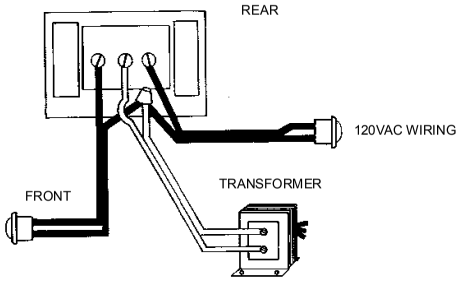

ACCESS TECHNOLOGY
1440 Ferris Place ● Bronx ● New York ● 10461

017TDC-2 & 3 AND 018-2 WIRELESS CONTROLLERS AND TRANSMITTER

NOTE: THE 017TDC-2 & 3 AND THE 018-2 ARE NOT COMPATIBLE WITH 017TDC-1 & 018-1

INSTRUCTION SHEET AND TROUBLESHOOTING GUIDE

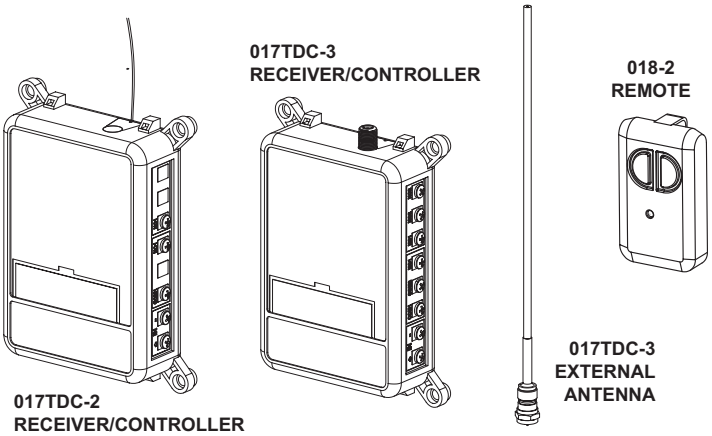

SPECIFICATIONS:

018-2 Two Button Transmitter **

- 6561 security codes available
- LED indicates operation
- Belt clip key ring provided
- Operates on 315 Mhz
- A-23 Battery Included
- FCC, IC Approved

017TDC-2 (Single Relay Controller)

- 100 Foot Range
- Time Delay 5-30 Seconds
- One 5 amp Normally Open and Normally Closed contacts, rated at 12 through 30 volts AC/DC
- Superheterodyne low radiant receiver

017TDC-3 (Dual Relay Controller)

- 300 Foot Range
- Time Delay 5-30 Seconds
- Two 5 amp Normally Open and Normally Closed contacts, rated at 12 through 30 volts AC/DC
- Relays can be coupled to work simultaneously or individually controlled by the 018-2's buttons.
- Superheterodyne low radiant receiver

***** BOTH PUSH BUTTONS ON THE 018-2 WILL TRIGGER THE 017TDC-2***

CAUTION: ***CHANGES OR MODIFICATIONS TO THE 017TDC2, 017TDC-3 AND 018-2 NOT EXPRESSLY APPROVED BY THE PARTY RESPONSIBLE FOR COMPLIANCE COULD VOID THE USERS AUTHORITY TO OPERATE THE DEVICE.***

HOW TO WIRE YOUR 017TDC-2 & 3 WITH DIFFERENT DEVICES

THE ILLUSTRATIONS ON THIS MANUAL SHOWS AN ELECTRIC STRIKE AS THE INTENDED LOAD, THE 017TDC-2 & 3 CAN BE USED TO FOR OTHER APPLICATIONS (I.E. GARAGE DOOR OPENERS, REMOTE LIGHTING, OTHER SPECIAL APPLICATION SWITCHING... ETC.).

CAUTION: ***TO AVOID ELECTROCUTION, MAKE SURE TO TURN OFF THE POWER FROM THE CIRCUIT BREAKER BEFORE ELECTRICALLY WIRING THIS DEVICE.***

CONNECTING YOUR 017TDC-2 & 3 TO THE POWER SUPPLY

The 017TDC-2 & 3 will work with a range of operating voltages. These voltages are from 12 Volts through 30 Volts - AC (Alternating Current) or DC (Direct Current).

If the operating voltage is AC, polarity is not an issue. However, if the operating voltage is DC, the installer must make sure that all the polarity must match between the power supply and the devices being connected to the 017TDC-2 or 017TDC-3.

Figure 1 shows how the transformer is connected. Connect the output wires of the transformer to the power input terminals marked Positive (+) and Negative (-) if using DC voltage. If the operating voltage is AC then you need not bother about polarity, simply connect your wires to the two screws marked "IN".

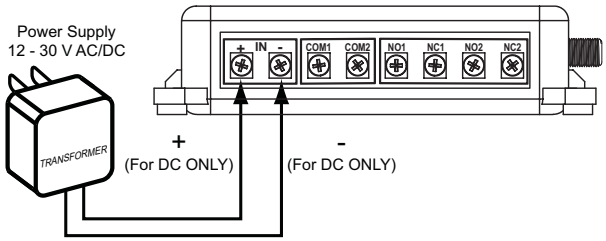

FIGURE 1

CONNECTING A FAIL-SECURE STRIKE TO YOUR 017TDC-2 & 3

Electric strikes can be FAIL SECURE (Locked when power is off) or FAIL SAFE (Unlocked when power is off). To connect a FAIL SECURE Strike please see Figure 2. Note that most electric strikes are not polarity sensitive. Read the electric strike's instruction sheet and follow it's polarity recommendations.

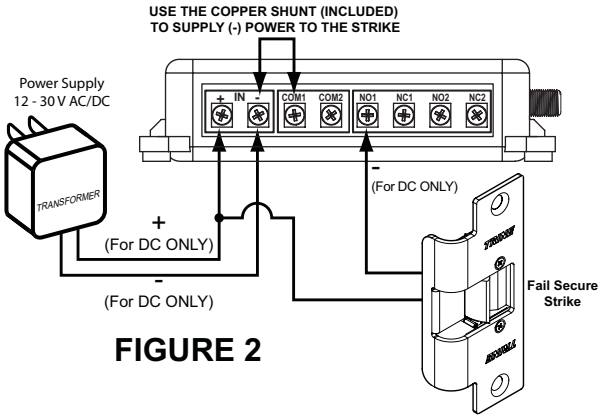

FIGURE 2

CONNECTING A FAIL-SECURE STRIKE AND A SWITCH TO YOUR 017TDC-2 & 3

To connect a push button to mechanically operate the FAIL-SECURE Strike, connect one side of the Normally Open Switch to the 017TDC's "COM1" terminal and to the "NO1" terminal as shown on Figure 3.

This application is not limited to fail-secure strikes only. Any normally "OFF" devices that needs to be temporarily switched "ON" can substitute for fail-secure strikes for example garage door openers.

NOTE: If external push button switches were used, the time delay function of the receiver is overridden when using the push buttons so the load will stay "ON" only for the duration that the switches are pressed.

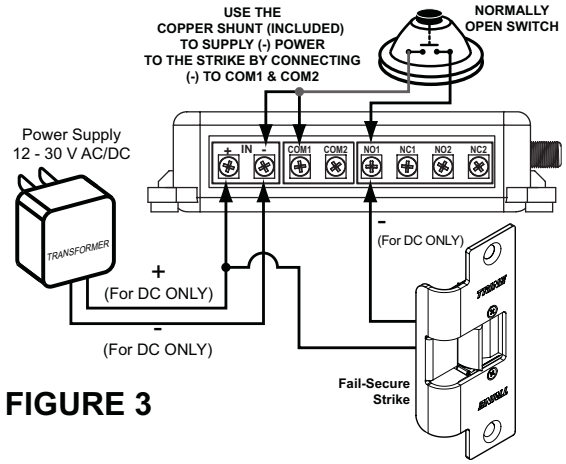

FIGURE 3

CONNECTING TWO FAIL-SECURE STRIKES AND SWITCHES TO YOUR 017TDC-3

017TDC-3 has two relay outputs that can be triggered together or separately. You can connect two fail-secure electric strikes as shown below in Figure 4. Optionally, you can add two switches to manually override the wireless receiver.

This application is not limited to fail-secure strikes only. Any normally "OFF" devices that needs to be temporarily switched "ON" can substitute for fail-secure strikes for example garage door openers.

NOTE: If external push button switches were used, the time delay function of the receiver is overridden when using the push buttons so the load will stay "ON" only for the duration that the switches are pressed.

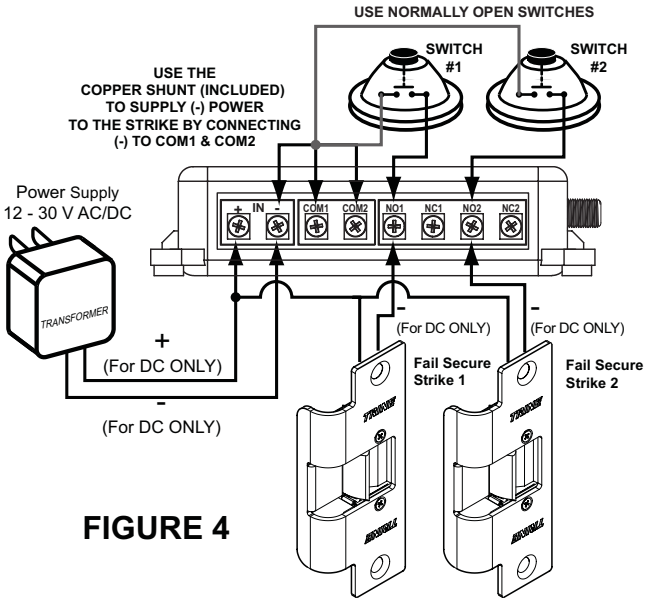

FIGURE 4

CONNECTING A FAIL-SAFE STRIKE TO YOUR 017TDC-2 & 3

To connect a FAIL-SAFE strike to the 017TDC please see Figure 5 below.

Note that AC application requires no polarity matching, however, for DC applications, the positive side of the strike attaches to terminal #4 and the negative side to terminal #3.

This application is not limited to fail-safe strikes only. Any normally "ON" devices that needs to be temporarily switched "OFF" can substitute for fail-safe strikes for example Magnetic Locks.

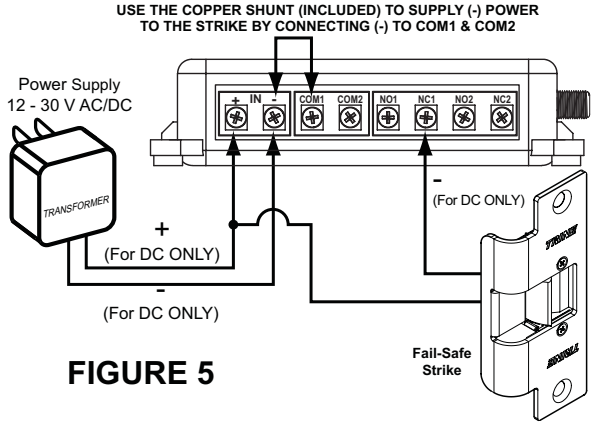

FIGURE 5

CONNECTING A FAIL-SAFE STRIKE AND A SWITCH TO YOUR 017TDC-2 & 3

To connect a push button to mechanically operate a FAIL SAFE strike, connect one side of a Normally CLOSED Switch in series with the strike. One side of the switch connects to the 017TDC's terminal #5 and the other side to one side of the strike as shown on Figure 6 below.

Note that this application is not limited to fail-safe strikes only. Any normally "ON" devices that needs to be temporarily switched "OFF" can substitute for fail-safe strikes for example Magnetic Locks.

NOTE: If external push button switches were used, the time delay function of the receiver is overridden when using the push buttons so the load will stay "ON" only for the duration that the switches are pressed.

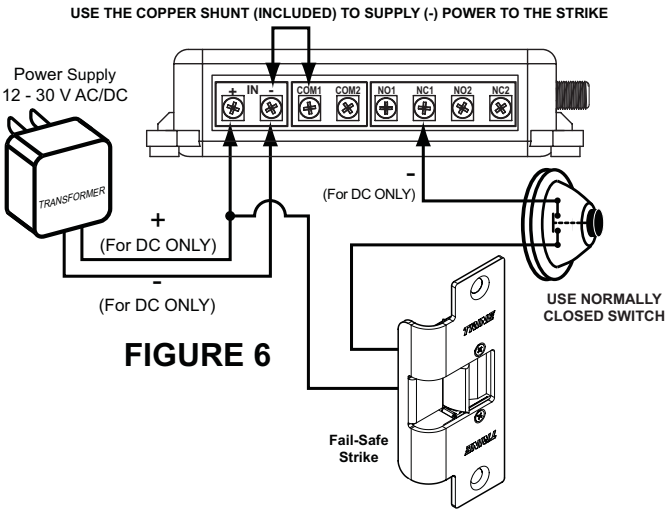

FIGURE 6

CONNECTING TWO FAIL-SAFE STRIKES AND SWITCHES TO YOUR 017TDC-3

Optionally, you can connect two fail-safe strikes on the 017TDC-3 that can have two switches to manually override the wireless receiver. Refer to the schematic shown in Figure 7 below.

This application is not limited to fail-safe strikes only. Any normally "ON" devices that needs to be temporarily switched "OFF" can substitute for fail-safe strikes for example Magnetic Locks.

NOTE: If external push button switches were used, the time delay function of the receiver is overridden when using the push buttons so the load will stay "ON" only for the duration that the switches are pressed.

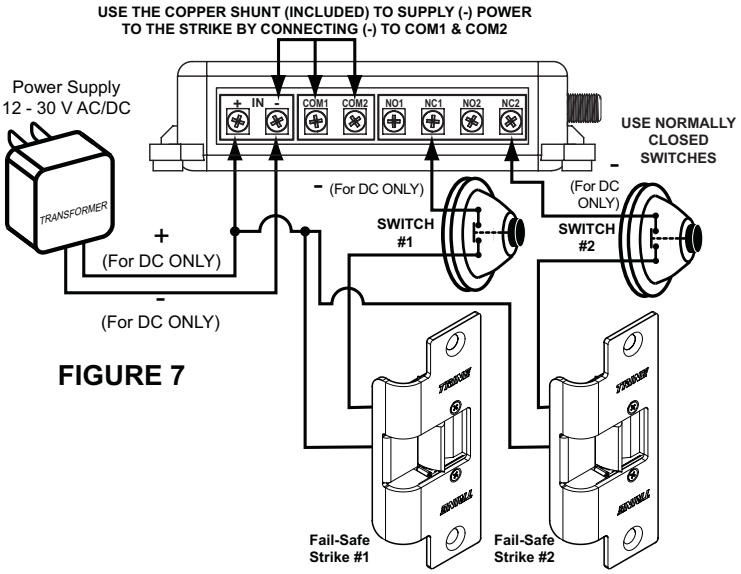

FIGURE 7

SETTING: SECURITY CODE, TIME DELAY AND SWITCHING MODE

SECURITY CODE SETTING:

Once all the electrical connections had been made and checked, you have to set the security codes for the 017TDC-2 or 3 receiver and the 018-2 transmitter. If you have the 017TDC-3 you have to set the switching mode of the two relays.

The security code positions for the receiver must match the codes of the transmitter/ transmitters for these devices to communicate properly.

To change the codes on the 017TDC-2 or 3 receiver, open the cover and set the Security Code tri-state DIP switches to your desired positions, open the 018-2 transmitter and match the coding of the receiver. Figure 8 shows the location of the DIP switches for the receiver and the 018-2 transmitter.

FIGURE 8

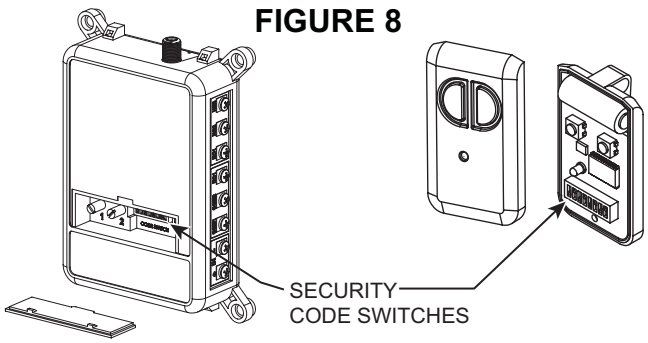

EXAMPLE CODE SETTING:

FIGURE 9

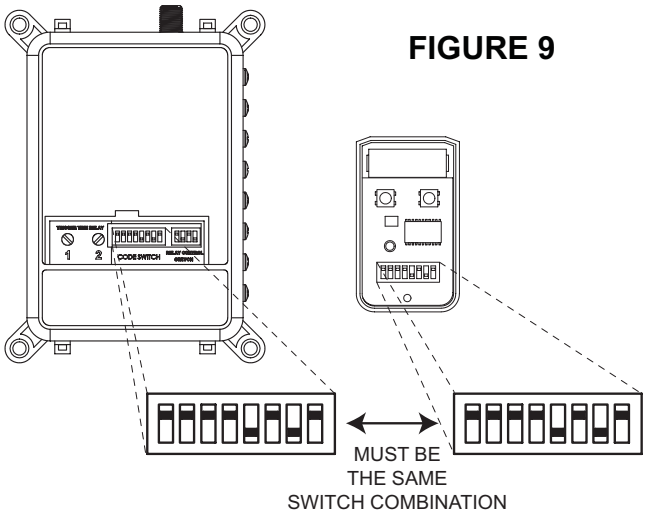

017TDC-2 & 3 TRIGGER TIME DELAY SETTING:

The 017TDC receiver trigger time delay can be adjusted to stay "ON" for 5 seconds minimum to 30 seconds maximum. Turn the time delay knob/knobs to your desired setting. Counter-clockwise to reduce the delay, Clockwise to increase delay. For the location of the knobs, see Figure 10 below.

FIGURE 10

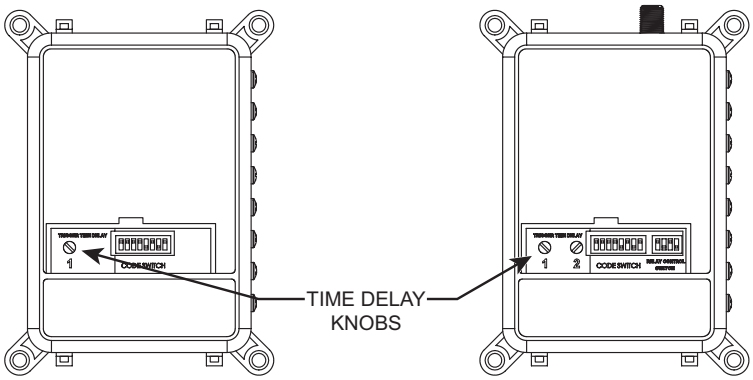

017TDC-3 SWITCHING MODE SETTING:

The 017TDC-3 has two relays capable of being triggered together by one button from the 018-2 transmitter or separately by the two buttons from the 018-2 transmitter. Set the relay control switch to your desire mode but following the coding below.

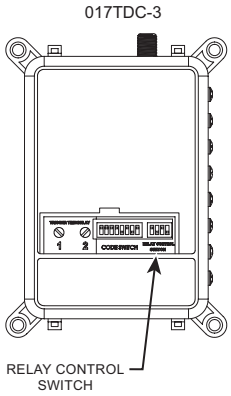

ALL CHANNELS "OFF"

"A" BUTTON OPERATES "1" RELAY
"B" BUTTON OPERATES "2" RELAY

"A" BUTTON OPERATES BOTH RELAYS

"B" BUTTON OPERATES BOTH RELAYS

ANY BUTTON OPERATES BOTH RELAYS

NOTE:
The 017TDC-2 has only one relay and is triggered by any of the two buttons on the 018-2 transmitter.

BATTERY SPECIFICATION AND ORIENTATION:

USE **A23 12VDC** ALKALINE BATTERY OR IT'S FOLLOWING EQUIVALENT: MN21, GP23AE, A23, VA23GA, MS21

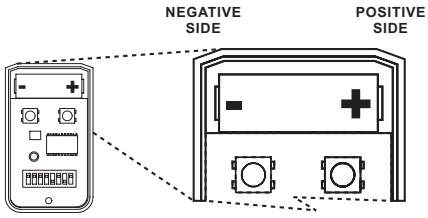

TROUBLESHOOTING GUIDE SECTION:

The 017TDC-2 & 3 and the 018-2 operates on radio frequency (RF) signaling and may have some problems being installed in certain locations. Radio frequency (RF) signals are similar in principle as two people conversing. RF communications however are more difficult to troubleshoot because RF modulates at frequencies that are not audible to human ears.

Let's say that you and I are comfortably conversing, if a person starts talking loud next to us, then we may start to automatically go closer and closer to each other until we can once again understand each other.

RF devices will work the same way. The first objective in troubleshooting is to spot the troublemaker, in this case the offending device. The offending device can be one or the combination of the following items: light dimmers, fluorescent lights, TV or computer CRT displays and any piece of equipment using a switching power supply or "clock" oscillator (computers and other digital devices). Additionally, ham and CB transmitters, remote controls, wireless phones, cellular phones, commercial taxi/police/aircraft radios, microwave ovens, motion sensors, radar systems, and a myriad of medical and industrial RF devices.

As you can appreciate from the litany of devices above almost any perimeter can have multiple sources of RF noisemakers. Deciding the final position for mounting the 017TDC will immensely improve your chances of installation success. Before nailing the 017TDC receiver down, choose an initial location and use a 10 feet electrical cord and walk test the 017TDC's sensitivity to receive the 018-2's signal. Once you have determine the most ideal spot, that is the place you will install the receiver.

PROBLEM	POSSIBLE CAUSE	SOLUTION
Transmitter does not work (LED lamp does not light)	Battery is low	Replace the battery. Use an A23 size 12VDC Alkaline battery.
	Battery is not properly installed	Reinstall the battery correctly (see battery polarity drawing above)
Transmitter does not work (LED lamp turns ON)	Transmitter is out of range	Move the transmitter closer to the receiver (see above article)
	Wiring connections may be faulty	Check your wiring against the appropriate wiring scheme on page 1, 2 & 3
	Security Code mismatch	See if your receiver and transmitter security code match (see page 3)
Receiver does not work	Wiring connection may be faulty	Check your wiring against the appropriate wiring scheme on page 1, 2 & 3
	RF interference	Read the article above regarding RF interference
	Security Code mismatch	See if your receiver and transmitter security code match (see page 3)
	Faulty power supply	Check the power supply for correctness of voltage and capacity
Receiver works intermittently	Loose wiring connections or shorted wire	Carefully check all your wiring connections and tighten loose connections

Operation is subject to the following two conditions: (1) this device may not cause interference, and (2) this device must accept any interference, including interference that may cause undesired operation of the device

TRINE ACCESS TECHNOLOGY
1440 Ferris Place ● Bronx ● New York ● 10461
Tel. No. (718) 829-2332 ● Fax No. (718) 829-6405
Website: www.TrineOnline.com

NOTICE REGARDING THE 018-2 TRANSMITTER

FCC ID: PFO018-2

018-2 TRANSMITTER

This device complies with Part 15 of the FCC Rules. Operation is subject to the following two conditions: (1) this device may not cause harmful interference and (2) this device must accept any interference received, including interference that may cause undesired operation.

ACCESS TECHNOLOGY
1440 Ferris Place ● Bronx ● New York ● 10461

018-2 WIRELESS TRANSMITTER
INSTRUCTION SHEET AND TROUBLESHOOTING GUIDE

018-2 Two Button Transmitter

- 6561 security codes available
- LED indicates operation
- Belt clip key ring provided
- Operates on 315 Mhz
- A-23 Battery Included
- FCC, IC Approved

CAUTION: ***CHANGES OR MODIFICATIONS TO THE 017TDC2, 017TDC-3 AND 018-2 NOT EXPRESSLY APPROVED BY THE PARTY RESPONSIBLE FOR COMPLIANCE COULD VOID THE USERS AUTHORITY TO OPERATE THE DEVICE.***

NOTE: BOTH PUSH BUTTONS ON THE 018-2 WILL TRIGGER THE 017TDC-2

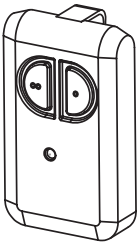

018-2 REMOTE

SECURITY CODE SETTING:

You need to set the security codes for the 017TDC-2 or 3 receiver and the 018-2 transmitter for security purposes.

The security code positions for the receiver must match the codes of the transmitter or transmitters for these devices to communicate properly. (see Figure 2 below as an example)

To change the codes on your 018-2 loosen the transmitter's assembly screw and snap the front cover open. Match the coding of the receiver. Figure 1 below shows the location of the DIP switches for the 017TDC-2 & 3 receiver and the 018-2 transmitter.

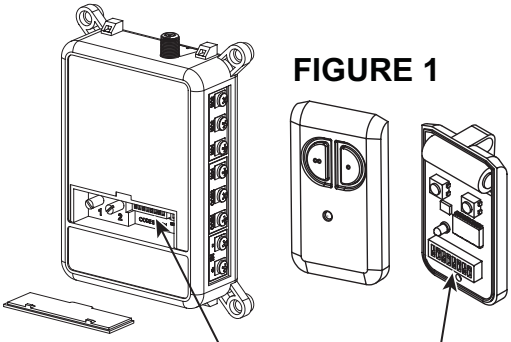

FIGURE 1

EXAMPLE CODE SETTING:

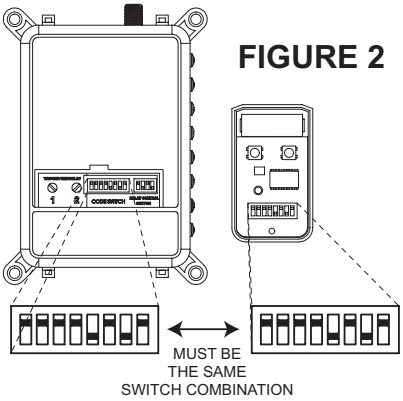

FIGURE 2

017TDC-3 SWITCHING MODE SETTING:

The 017TDC-3 has two relays capable of being triggered together by one button from the 018-2 transmitter or separately by the two buttons from the 018-2 transmitter. Set the relay control switch to your desire mode by following the coding shown on the next page.

NOTE:
The 017TDC-2 has only one relay and is triggered by any of the two buttons on the 018-2 transmitter.

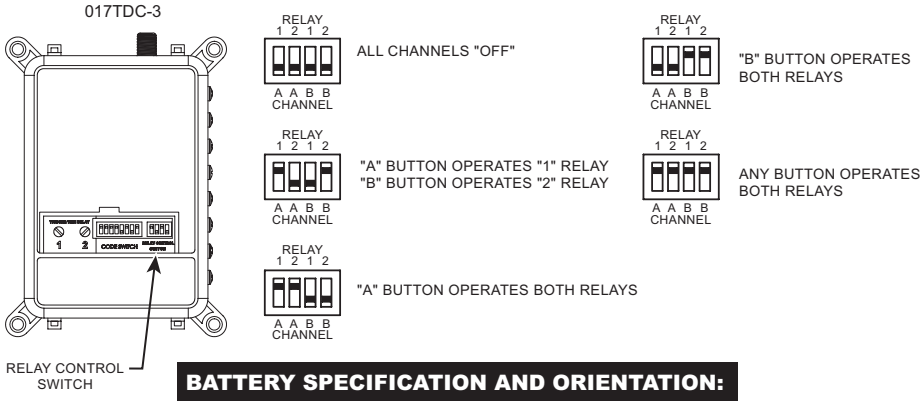

BATTERY SPECIFICATION AND ORIENTATION:

USE **A23 12VDC** ALKALINE BATTERY OR IT'S FOLLOWING EQUIVALENT: MN21, GP23AE, A23, VA23GA, MS21

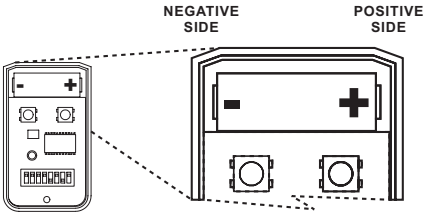

TROUBLESHOOTING GUIDE SECTION:

The 017TDC-2 & 3 and the 018-2 operates on radio frequency (RF) signaling and may have some problems being installed in certain locations. Radio frequency (RF) signals are similar in principle as two people conversing. RF communications however are more difficult to troubleshoot because RF modulates at frequencies that are not audible to human ears.

Let's say that you and I are comfortably conversing, if a person starts talking loud next to us, then we may start to go closer and closer to each other until we can once again understand each other.

RF devices will work the same way. The first objective in troubleshooting is to spot the troublemaker, in this case, the offending device. The offending device can be one or the combination of the following items: light dimmers, fluorescent lights, TV or computer CRT displays and any piece of equipment using a switching power supply or "clock" oscillator (computers and other digital devices). Additionally, ham and CB transmitters, remote controls, wireless phones, cellular phones, commercial taxi/police/aircraft radios, microwave ovens, motion sensors, radar systems, and a myriad of medical and industrial RF devices.

As you can appreciate from the litany of devices above almost any perimeter can have multiple sources of RF noisemakers. Deciding the final position for mounting the 017TDC will immensely improve your chances of installation success. Before screwing the 017TDC receiver down, choose an initial location and use a 10 feet electrical cord and walk test the 017TDC's sensitivity to receive the 018-2's signal. Once you have determine the most ideal spot, that is the place you will install the receiver.

PROBLEM	POSSIBLE CAUSE	SOLUTION
Transmitter does not work (LED lamp does not light)	Battery is low	Replace the battery. Use an A23 size 12VDC Alkaline battery.
	Battery is not properly installed	Reinstall the battery correctly (see battery polarity drawing above)
Transmitter does not work (LED lamp turns ON)	Transmitter is out of range	Move the transmitter closer to the receiver (see above article)
	Wiring connections may be faulty	Check your wiring scheme refer to the 017TDC-2 & 3 instruction sheet.
	Security Code mismatch	See if your receiver and transmitter security code match (see front page)
	Wiring connection may be faulty	Check your wiring scheme refer to the 017TDC-2 & 3 instruction sheet.
	RF interference	Read the article above regarding RF interference
	Security Code mismatch	See if your receiver and transmitter security code match (see front page)
	Faulty power supply	Check the power supply for correctness of voltage and capacity
Receiver works intermittently	Loose wiring connections or shorted wire	Carefully check all your wiring connections and tighten loose connections

For additional information regarding the 017TDC-2 and 3 Wireless Controllers and to download this document in electronic form (Adobe Acrobat PDF). Go to our website at http://www.trineonline.com/interior/support/instruction_sheet.html

NOTICE REGARDING THE 018-2 TRANSMITTER

FCC ID: PFO018-2

018-2 TRANSMITTER

This device complies with Part 15 of the FCC Rules.
Operation is subject to the following two conditions: (1) this device may not cause harmful interference and (2) this device must accept any interference received, including interference that may cause undesired operation.

TRINE ACCESS TECHNOLOGY 1440 Ferris Place ● Bronx ● New York ● 10461 Tel. No. (718) 829-2332 ● Fax No. (718) 829-6405
Website: www.TrineOnline.com