Horton AUTOMATICS®
4242 Baldwin Boulevard
Corpus Christi, Texas
USA 78405-3399
Tel: 800-531-3111, 361-888-5591
Fax: 800-531-3108, 361-888-6510
www.hortondoors.com
The Automatic Choice

SPECIFICATION DETAILS

AUTOMATIC COMMERCIAL SLIDE DOORS

Standard and Optional Glass Prep

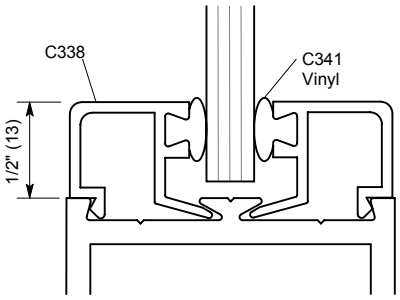

1/4" (6) Glazing
Standard

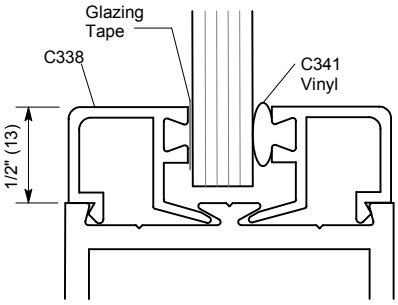

5/16" (8) Glazing

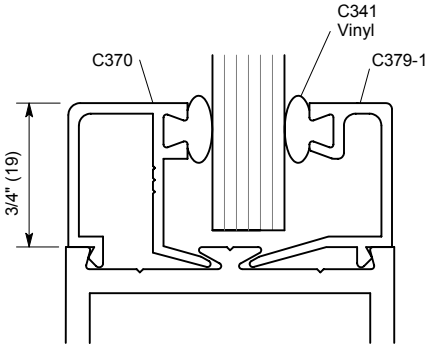

3/8" (10) Glazing

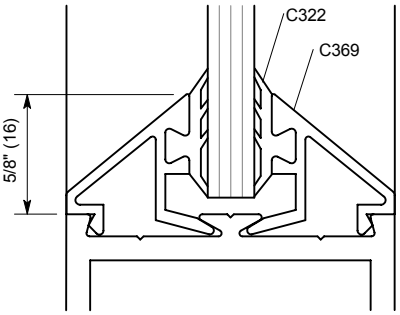

Bevel Stops (1/4" Glazing Only)

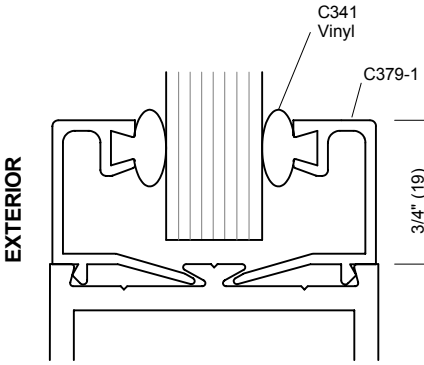

1/2" (13) Glazing

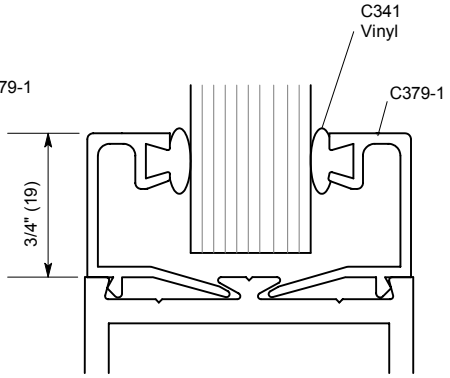

5/8" (16) Glazing

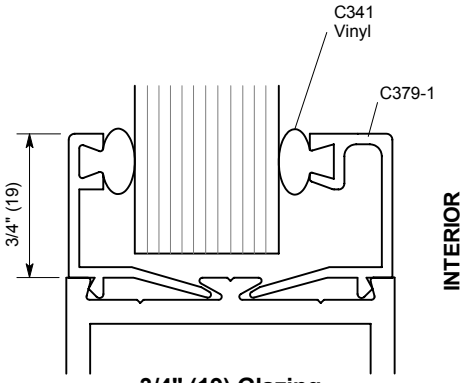

3/4" (19) Glazing

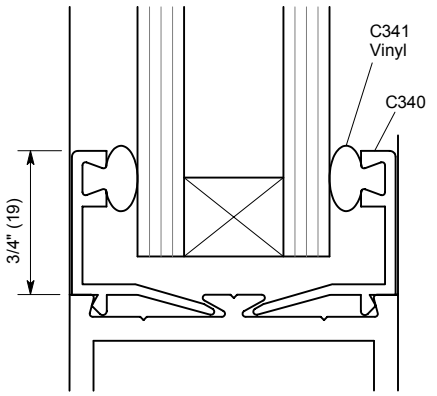

1" (25) Glazing

Horton Automatics reserves the right to improve the product and change its specifications without notice. Dimensions given in U.S. Inches followed by Millimeters in parenthesis.