U.S. ALUMINUM®

ARCHITECTURAL DESIGN MANUAL

Entrances • Curtain Walls • Sun Control Systems • Windows • Hurricane Resistant Systems • Blast Mitigation Systems

CAT. NO. **USAL15**

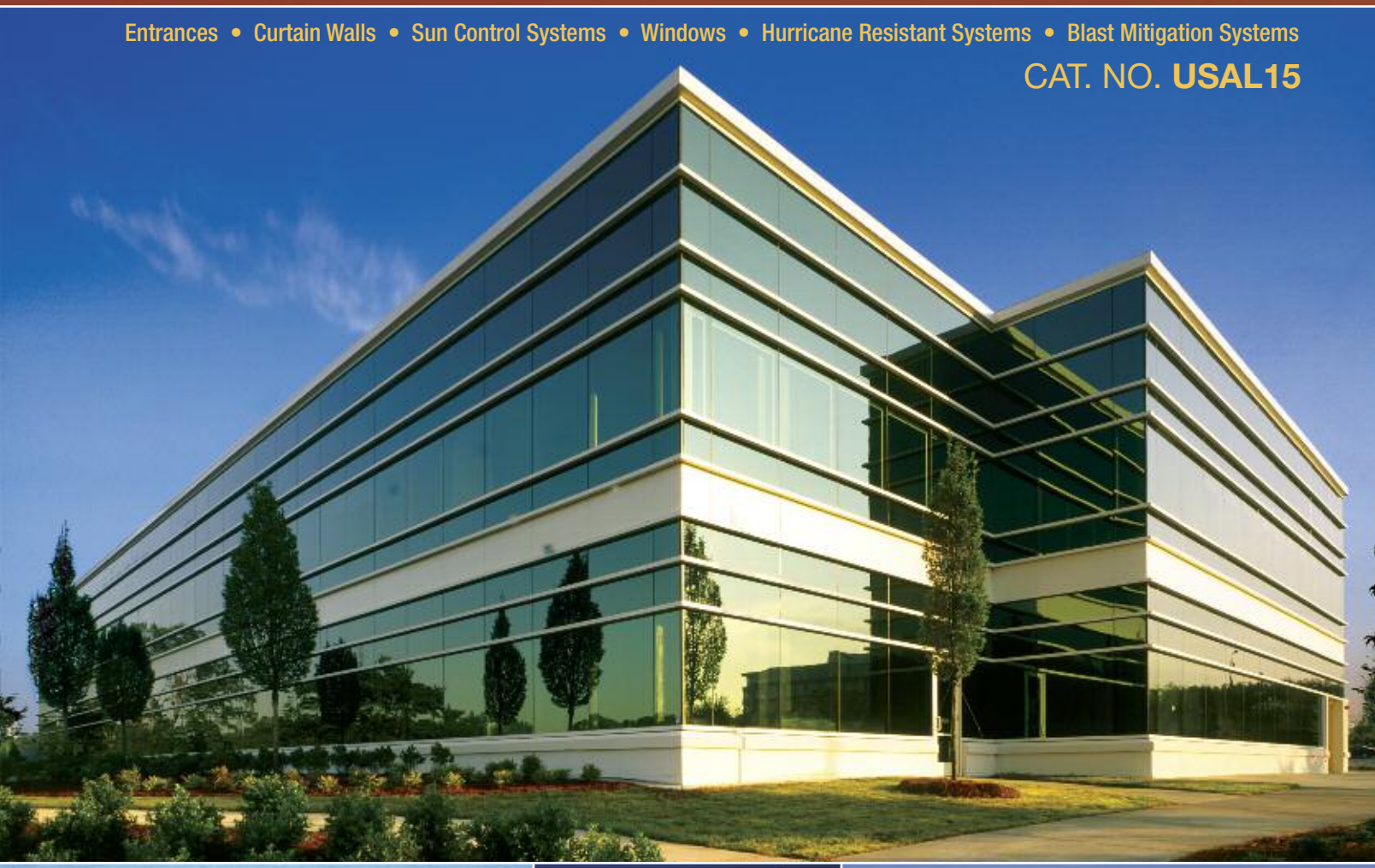

CRL U.S. ALUMINUM

CURTAIN WALLS

SYSTEMS | SUPPLIES | SERVICE

usalum.com

Don Friese
Chairman and C.E.O.
C.R. Laurence Co., Inc.

Lloyd Talbert
President and C.O.O.
C.R. Laurence Co., Inc

Leading the New Union of C.R. Laurence and U.S. Aluminum

We are pleased to offer for the first time a complete selection of aluminum architectural systems. These systems had been designed, marketed, and fabricated for years by United States Aluminum Company, a major force in the field. Their engineers and fabrication specialists had developed many architectural systems widely used in the construction of residential, commercial, and institutional buildings. Through precise engineering and testing in a variety of climate conditions, the company improved upon their designs, resulting in architectural systems known throughout the industry as being innovative, durable, and reliable.

United States Aluminum had for a time struggled with its own viability in the current economy, and faced an uncertain future. The leadership at C.R. Laurence saw this as an opportunity to save hundreds of American jobs, and keep good American made products on the market.

Now renamed simply U.S. Aluminum in its new partnership with C.R. Laurence, the company will continue to make available the architectural systems that has made them a leader in the industry for so long. These systems' reputation for quality benefits not only those who specify and install them, but also the occupants of the buildings into which they have been installed.

Architects and designers who are familiar with the qualities found in U.S. Aluminum systems know that they can specify them with confidence to their clients. The company has invested the time and effort required to assure their systems are properly tested to meet the conditions required to pass local and national building codes; including some of the very strictest, such as the Miami/Dade County Protocols for impact resistance in hurricane-prone areas, and the Department of Defense's (DoD) UFC 4-010-01 blast mitigation standard.

C.R. Laurence is committed to providing both the financial resources and our more than 50 years of experience in the glazing industry to breathe new life into the U.S. Aluminum brand and make it a prominent force in the market once again. There are immediate enhancements we will make to U.S. Aluminum to raise the bar for service and product availability in the storefront/curtain wall market. Some of these include shortened lead times, stocking programs, and other programs that take full advantage of CRL's manufacturing and distribution systems. In 2012 we will put many improvement initiatives into action to make our plans a reality. As a market leader we understand the needs of our customers, both large and small. We know you'll see and appreciate the difference between the newly renovated U.S. Aluminum and our competitors.

CRL®
U.S. ALUMINUM
crlaurence.com • usalum.com

Lloyd W. Talbert
President and C.O.O.

TABLE OF CONTENTS

GENERAL INFORMATION

ENTRANCES
- Series 250/400/550 Entrance Doors
- Series 800/850 Durafront Doors
- Platinum Series Doors
- Balanced Doors
- Thermal Entrances
- Series 900 Terrace Doors
- Series 2000 Sliding Doors
- Elephant Sliding Doors

CURTAIN WALLS
- Series 2100/2200
- Series 3150
- Series 3250
- Series 3252/HP3253
- Series 4250/4250T
- Series 4500

SUN CONTROL SYSTEMS
- Series 3600 Sunshade
- Series CRL7700 Sunshades
- Series CRL7750 Sunshades
- Custom Fabricated Sunshades
- Sun Control Panels
- Interior Light Shelves
- Vertical Screen Systems
- Aluminum Trellis Systems
- Aluminum and Steel Canopies
- Glass Awnings

WINDOWS
- Series 7200/7300
- Series 7400
- Series 7500/7600
- Series 8000/8100/8200

HURRICANE (IMPACT) RESISTANT SYSTEMS
- Series IW3250 Curtain Wall
- Series DH-350 Entrance Doors
- Series BAL-350 Terrace Doors
- IW7500/IW7600/IW8000/IW8100/IW8200 Windows

BLAST MITIGATION SYSTEMS
- Series BW3250 Curtain Wall
- BR7500/BW7600/BW8000/BW8100/BW8200 Windows

ARCHITECTURAL SYSTEMS
- 'All-Glass' Door Systems
- Heavy Glass Sliding Door Systems
- SPS Stacking Partition System
- Interior Office Partition Systems
- Architectural Railing Systems
- Architectural Metals
- Guarda™ Protective Security Screens
- Columbia Screen Doors
- Frameless Shower Hardware
- Glazing Tools
- Glossary of Common Terms

CRL/U.S. ALUMINUM

You Can Do It!

The Storefront Store Can Show You How

- **There's No Mystery Behind Selling and Installing Quality U.S. Aluminum Entrance Doors and Storefronts**
- **We Share Our Experience With You to Help You Expand Into This Profitable Business**

The Storefront Store employs designers, technicians, and service representatives who are invested in making the storefront business a profitable venture for U.S. Aluminum and our customers. Our years of experience in the field have given us the confidence to promote your entry into the sale and installation of attractive and quality-built aluminum entrance doors and storefronts.

Every community has businesses large and small that depend upon welcoming and reliable entrance doors and storefronts to attract customers. As time passes these entrance doors and storefronts can become worn or dated, in need of repair or outright replacement.

You can be your community's source for storefront repairs and replacement. It's not difficult when you have the backing of the Storefront Store. From design to delivery, the Storefront Store has the personnel and assets to get your storefront materials to you on time and without hassle.

We can do it and so can you. So if you would like more information on the products and services provided by the Storefront Store just contact us toll free at (800) 262-5151 from anywhere in the United States and Canada. You can also contact us through our web site at **usalum.com**.

CALL US TOLL FREE FROM ANYWHERE IN THE UNITED STATES AND CANADA (800) 262-5151 Ext. 5305

Come Visit the Storefront Store in Our Los Angeles, California Service Center. Our Knowledgeable Service Representatives are Anxiously Waiting to Assist You.

Online usalum.com By Phone (800) 262-5151 Ext. 5305
Online crlaurence.com By Phone (800) 421-6144 Ext. 5305

CRL/U.S. ALUMINUM

Our Service Centers are the Home of the Storefront Store

U.S. Aluminum Service Centers provide quality architectural systems that you can sell and install with confidence. Each is home to the Storefront Store, providing you with the systems, supplies, and service you need to make storefronts a part of your successful business. Our product lines include storefronts, entrance doors, window walls, curtain walls, sun control, and other systems that are known by the architectural community for their quality, performance, and aesthetic beauty.

U.S. Aluminum Service Centers provide dependable quality systems to meet specifications. Thousands of examples of U.S. Aluminum products are installed in buildings nationwide. Builders know that our systems are subjected to rigorous testing to assure quality and reliability through many years of service in all environmental conditions. Many U.S. Aluminum products now qualify for LEED® ratings as the requirement for "green" building products increases.

Experienced U.S. Aluminum employees operate our Service Centers, and have developed long-lasting relationships with our suppliers and customers. Their familiarity with the product line and regional environmental conditions are a big plus when it comes to recommending just the right U.S. Aluminum system to complete your project. We invite you to contact your local U.S. Aluminum Service Center for information and pricing on any of our systems and product lines. Locations are shown on page V.

U.S. Aluminum's 62,000 sq. ft. Service Center in Los Angeles, California

Online usalum.com By Phone (800) 262-5151 Ext. 5305
Online crlaurence.com By Phone (800) 421-6144 Ext. 5305

CRL/U.S. ALUMINUM

C.R. Laurence Company Partners With U.S. Aluminum for Improved Service Plus a Bigger and Better Product Selection

The union of U.S. Aluminum with C.R. Laurence Company combines the strengths of both companies to provide architects, designers, and installers with a single resource for curtain wall, storefront, and entrance projects. CRL has served all facets of the glazing industry for decades, from the local glass shop to global glass manufacturers. CRL's Manufacturing Division produces thousands of products for the industry, and holds patents for some of the most innovative of systems used in the glazing and building trades. We invite you to get to know C.R. Laurence through our web site, **crlaurence.com**. You can also contact us directly through our local Service Centers or through our headquarters by calling (800) 421-6144 from anywhere in the United States and Canada.

C.R. Laurence Hardware and Supplies to Help You Finish the Job

C.R. Laurence Company has the most complete selection of glazing supplies and builder's hardware in the entire industry. Installation and measuring tools, sealants, gaskets, fasteners, setting blocks, shims, plus safety gear for your protection.

- **Everything You Need to Prepare for and Complete a Successful Installation Can Be Sent Along With Your U.S. Aluminum Curtain Wall and Storefront Package**

C.R. Laurence Catalogs are Online at crlaurence.com

C.R. Laurence Company publishes a complete selection of Master and Specialty Catalogs to showcase a product line that runs into tens of thousands of items. All of them are available for viewing, download or order in the Catalog Library at **crlaurence.com**.

Online usalum.com By Phone (800) 262-5151 Ext. 5305
Online crlaurence.com By Phone (800) 421-6144 Ext. 5305

CRL/U.S. ALUMINUM

For Worldwide Service Center and Manufacturing Locations Visit **crlaurence.com**

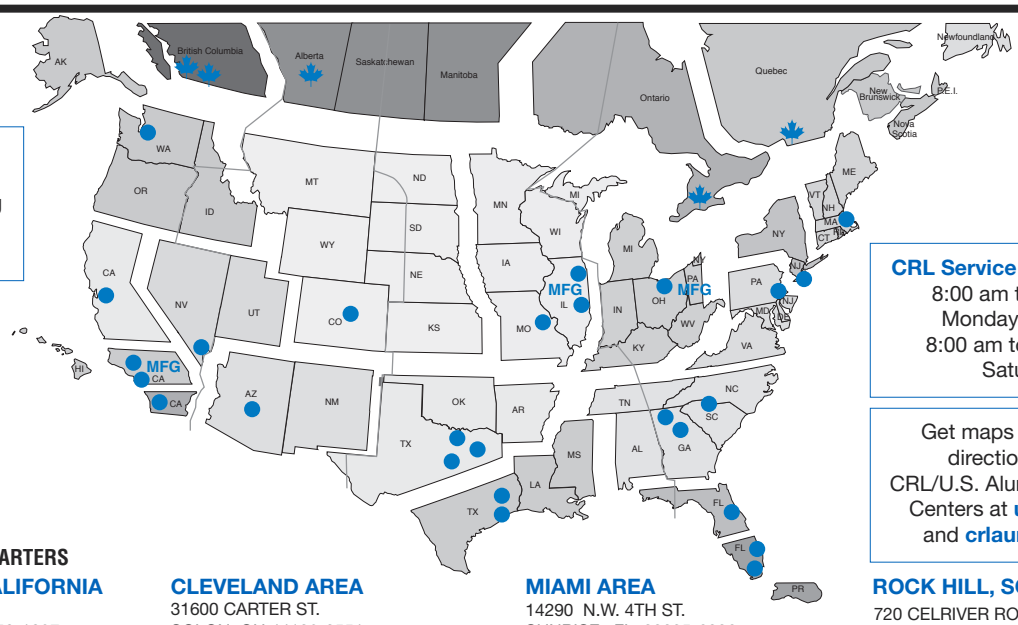

CRL Service Center Hours
8:00 am to 5:00 pm
Monday to Friday
8:00 am to 12:00 pm
Saturday

Get maps and driving directions for all CRL/U.S. Aluminum Service Centers at **usalum.com** and **crlaurence.com**

U.S.A.

CORPORATE HEADQUARTERS

LOS ANGELES, CALIFORNIA
2503 E. VERNON AVE.
LOS ANGELES, CA 90058-1897
PHONE: (323) 588-1281
FAX: (323) 581-6522

LOS ANGELES, CALIFORNIA
2450 E. VERNON AVE.
LOS ANGELES, CA 90058-1802
PHONE: (323) 268-4230
FAX: (866) 262-3299

ATLANTA, GEORGIA
600 WHARTON DR.
ATLANTA, GA 30336-4040
PHONE: (404) 696-3445
FAX: (404) 696-3386

ATLANTA, GEORGIA
5530 WESTPARK DRIVE SW
ATLANTA, GA 30336-2645
PHONE: (404) 344-3468
FAX: (404) 344-3412

BOSTON AREA
97 ROBERT TREAT PAINE DR.
TAUNTON, MA 02780-1267
PHONE: (508) 880-5600
FAX: (508) 880-5775

CHICAGO AREA
2765 SPECTRUM DR.
ELGIN, IL 60124-7841
PHONE: (847) 426-3800
FAX: (847) 426-0111

CHICAGO, ILLINOIS
6969 W. 73RD ST.
CHICAGO, IL 60638-6025
PHONE: (708) 458-9070
FAX: (708) 458-7364

CLEVELAND AREA
31600 CARTER ST.
SOLON, OH 44139-3551
PHONE: (440) 248-0003
FAX: (440) 248-0120

DALLAS, TEXAS
2080 LONE STAR DR.
DALLAS, TX 75212-6390
PHONE: (214) 634-7305
FAX: (214) 631-6519

DALLAS, TEXAS
4841 LAKAWANA ST.
DALLAS, TX 75247-6713
PHONE: (214) 638-8722
FAX: (214) 638-3299

DENVER, COLORADO
4770 JOLIET ST.
DENVER, CO 80239-2513
PHONE: (303) 373-9988
FAX: (303) 373-0884

HOUSTON, TEXAS
4420 WINDFERN RD.
HOUSTON, TX 77041-8918
PHONE: (713) 462-6300
FAX: (713) 462-6306

HOUSTON, TEXAS
5910 WEST BY NORTHWEST BL.
SUITE 300
HOUSTON, TX 77040-4949
PHONE: (713) 462-1766
FAX: (713) 462-1680

LAS VEGAS, NEVADA
4120 SOBB AVE.
LAS VEGAS, NV 89118-6857
PHONE: (702) 253-0211
FAX: (702) 253-0311

MIAMI AREA
14290 N.W. 4TH ST.
SUNRISE, FL 33325-6226
PHONE: (954) 846-9233
FAX: (954) 846-9277

MIAMI, FLORIDA
7500 N.W. 69TH AVE.
MIAMI, FL 33166-2543
PHONE: (305) 888-0077
FAX: (305) 884-3111

NEW YORK CITY AREA
211 COUNTY AVE.
SECAUCUS, NJ 07094-2006
PHONE: (201) 770-1077
FAX: (201) 770-1599

ORLANDO AREA
45150 US HIGHWAY 27 NORTH
SUITE D
DAVENPORT, FL 33897-4512
PHONE: (863) 424-4700
FAX: (863) 424-4646

ORLANDO, FLORIDA
6950 PRESIDENTS DR.
ORLANDO, FL 32809-5668
PHONE: (407) 857-7900
FAX: (407) 857-7766

PHILADELPHIA AREA
1511 LANCER DR.
MOORESTOWN, NJ 08057-4232
PHONE: (856) 727-1022
FAX: (856) 727-3299

PHOENIX, ARIZONA
640 S. 54TH AVE.
PHOENIX, AZ 85043-4731
PHONE: (602) 269-7500
FAX: (602) 269-7600

ROCK HILL, SOUTH CAROLINA
720 CELRIVER ROAD
ROCK HILL, SC 29730-7419
PHONE: (803) 366-8326
FAX: (803) 366-5776

SAN DIEGO, CALIFORNIA
10280 CAMINO SANTA FE
SAN DIEGO, CA 92121-3105
PHONE: (858) 678-8984
FAX: (858) 678-0486

SAN FRANCISCO/ OAKLAND AREA
33200 DOWE AVE.
UNION CITY, CA 94587-2013
PHONE: (510) 475-1000
FAX: (510) 475-1404

SEATTLE AREA
23000 64TH AVE. S.
KENT, WA 98032-1838
PHONE: (253) 850-5800
FAX: (253) 813-1818

ST. LOUIS, MISSOURI
11621 FAIRGROVE INDUSTRIAL BL.
MARYLAND HEIGHTS,
MO 63043-3437
PHONE: (314) 997-5112
FAX: (314) 997-7504

WAXAHACHIE, TEXAS
200 SINGLETON RD.
WAXAHACHIE, TX 75165-5012
PHONE: (972) 937-9651
FAX: (972) 937-0405

ADDITIONAL SERVICE CENTERS ARE PLANNED TO OPEN IN SEVERAL AREAS IN THE NEAR FUTURE. PLEASE CALL US OR VISIT **USALUM.COM** FOR A CURRENT LIST OF LOCATIONS.

Canada

VANCOUVER AREA
11920 HORSESHOE WAY
RICHMOND, BC V7A 4V5
PHONE: (604) 448-9344
FAX: (604) 448-9322

VANCOUVER AREA
5377 272ND ST.
LANGLEY, BC V4W 1P1
PHONE: (604) 857-7766
FAX: (604) 857-1377

MONTREAL AREA
8200, RUE DES BÂTISSEURS
ANJOU, QC H1J 3B3
PHONE: (514) 352-3300
FAX: (514) 352-1017

CANADA HEADQUARTERS

TORONTO AREA
65 TIGI COURT
CONCORD, ON L4K 5E4
PHONE: (905) 303-7966
FAX: (905) 303-7965

CALGARY, ALBERTA
4200 116 AVENUE SE
CALGARY, AB T2Z 4B5
PHONE: (403) 250-5783
FAX: (403) 291-3260

Online usalum.com By Phone (800) 262-5151 Ext. 5305
Online crlaurence.com By Phone (800) 421-6144 Ext. 5305

CRL/U.S. ALUMINUM

An Integration of Capabilities to Benefit Your Curtain Wall and Storefront Business

U.S. Aluminum Systems are Designed and Fabricated Here

Your orders for U.S. Aluminum Systems are designed and fabricated in one of our North American Service Centers. This keeps lead times short because there's no delay for parts or accessories to come from overseas. This also helps prevent unexpected cost surges due to unstable international currency markets.

U.S. Aluminum Can Help Design Your Next Curtain Wall or Storefront Project

We have a dedicated Computer Aided Drafting (CAD) Department to assist you with drawing submittals and custom design work after you've landed that special project. They will work with you to assure your plans are safe and viable and the best option for your prospective clients in today's very competitive business environment.

U.S. Aluminum Systems Can Be Delivered Closer to Your Project Site

U.S. Aluminum and C.R. Laurence Company have Service Centers in over 20 major metropolitan areas in the United States and Canada, and operate an interbranch transfer system that can bring your orders closer to your job site. You save on costly cross-country shipping and have the assurance that we will handle your order with care.

U.S. Aluminum Has a Stocking Program for Standard Doors at All U.S. Aluminum and C.R. Laurence Service Centers

- **Need a Quality Built Entrance Door in a Rush? Our Stocking Program for Standard Doors is the Solution**

Many things can happen to entrance doors in busy stores: damage from storms, vandalism, and just plain wear and tear from years of service. U.S. Aluminum can help you be prepared for that next service call with our Stocking Program for Standard Doors, available to you through all U.S. Aluminum and C.R. Laurence Service Centers. See pages 14-H1 through 17-H1 for more information.

Online usalum.com By Phone (800) 262-5151 Ext. 5305
Online crlaurence.com By Phone (800) 421-6144 Ext. 5305

CRL/U.S. ALUMINUM

You Can Do It With the Help of Curtain Wall and Storefront Estimating Software

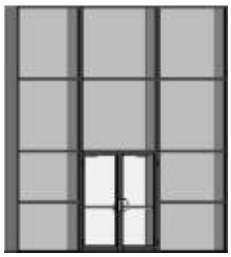

U.S. Aluminum Currently Supports Two Estimating and Bidding Curtain Wall and Storefront Programs to Produce Professional Results

C.R. Laurence and U.S. Aluminum are supporting curtain wall and storefront estimating software programs that allow you to produce professional plan views and make hardware ordering lists right from your own PC.

A powerful stock material optimizer allows you to check and modify cut pieces before the job is optimized. You get glass sizes based on elevations drawn, and a print sheet can be produced for the shop to use for optimization of materials. The software provides you with libraries of common curtain wall and storefront templates that can be tailored to a particular project or you can build your own library of your most common designs. You can also copy and modify past jobs.

Contact U.S. Aluminum Technical Sales toll free at (800) 262-5151 for information on how you can put this valuable innovation to work for you.

FOR MORE INFORMATION ON CURTAIN WALL AND STOREFRONT ESTIMATING SOFTWARE CALL US TOLL FREE (800) 262-5151

CRL 'All-Glass' Storefronts Online®

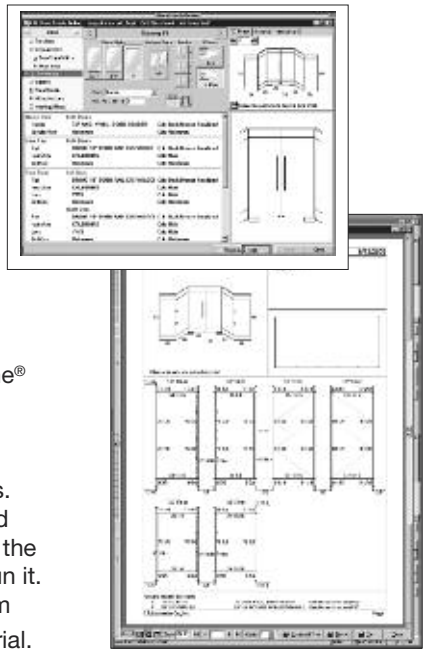

- **Request Quotes and Order Directly From Program**
- **You Can Create a Job Template Library or Clone Any Saved Project**
- **New Branding Features Add Your Company Logo to Documents**
- **Direct Link to CRL Web Site From Program**
- **CRL Training Webinars to Get You Started**

Designers of 'all-glass' storefronts will find our web based 'All-Glass' Storefronts Online® program to be a real time and money saver. It is tailored for use in most any 'all-glass' storefront application using 3/8", 1/2", or 3/4" (10, 12, or 19 mm) glass, including doors, sidelites, transoms, and fin supports with full top and bottom rails or patch fittings. Our program will create a hardware list, print glass sizes, and create a quote sheet in minutes. This includes warnings regarding any issues that may conflict with a complete and sound entrance. You can simply log on from any computer that is connected to the Internet. All the processing takes place on our computers so you do not need any special hardware to run it. Any Windows-based PC running Windows 2000 or newer with a minimum of 56K modem can be used. Go to **crlaurence.com** and sign up for our Webinar and a 30-day **FREE** trial.

Online usalum.com By Phone (800) 262-5151 Ext. 5305
Online crlaurence.com By Phone (800) 421-6144 Ext. 5305

CRL/U.S. ALUMINUM

Our New Catalogs Showcasing
SYSTEMS • SUPPLIES • SERVICE

new

CAT. NO. USAL15

Your Premier Source for
Entrances and Curtain Walls

- **Entrances**
- **Curtain Walls**
- **Sun Control Systems**
- **Windows**
- **Hurricane Resistant**
- **Blast Resistant**

This USAL15 Architectural Design Manual offers you a full range of curtain wall systems with superior thermal performance. The quality, performance, and aesthetic beauty of our products permit architects and designers to fully utilize the unique structural properties of aluminum for both interior and exterior design. Finishes range from custom matched painted coatings to a wide selection of clear, bronze or black anodic finishes.

Our engineering staff constantly updates product design to satisfy the performance requirements and economic concerns of today's most demanding projects. After design, certified independent testing labs test our systems to the highest industry standards.

This Catalog has over 500 pages of extensive information on Aluminum Entrance Doors, Curtain Walls, Sun Control Systems, Windows, Hurricane (Impact) Resistant Systems, Blast Mitigation Systems, 'All-Glass' Entrances, and Interior Office Front Systems, including an A to Z Index for quick look-up of products. Organized into sections for fast and easy product reference, the USAL15 Architectural Design Manual is your premier source for all things curtain wall.

ASK FOR YOUR FREE COPY TODAY OR VIEW AND DOWNLOAD AT USALUM.COM

new

CAT. NO. USAL14

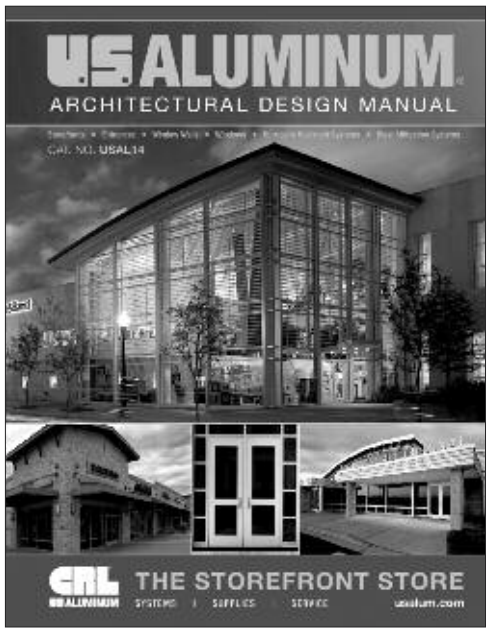

Your Complete Source for
Entrances and Storefronts

- **Storefronts**
- **Entrances**
- **Window Walls**
- **Windows**
- **Hurricane Resistant**
- **Blast Resistant**

Our USAL14 Architectural Design Manual will show you how simple it can be to get into the storefront installation and repair business. U.S. Aluminum has designed and engineered a number of proven and attractive storefront systems with long-lasting quality, reliability, and durability. Whatever the climate and environment, our storefront systems are known performers that deliver value on a daily basis.

The USAL14 Architectural Design Manual has over 500 pages of extensive information on Aluminum Entrance Doors, Storefronts, Window Walls, Windows, Hurricane Resistant (Impact) Systems, Blast Mitigation Systems, 'All-Glass' Entrances, and Interior Office Front Systems, including an A to Z Index for quick look-up of products. Organized into sections for fast and easy product reference, the USAL14 Architectural Design Manual is your premier source for all things storefront.

Online usalum.com By Phone (800) 262-5151 Ext. 5305
Online crlaurence.com By Phone (800) 421-6144 Ext. 5305

CRL/U.S. ALUMINUM

Our New Catalogs Showcasing
SYSTEMS • SUPPLIES • SERVICE

ASK FOR YOUR FREE COPY TODAY OR VIEW AND DOWNLOAD AT USALUM.COM

new

CAT. NO. CRL14D

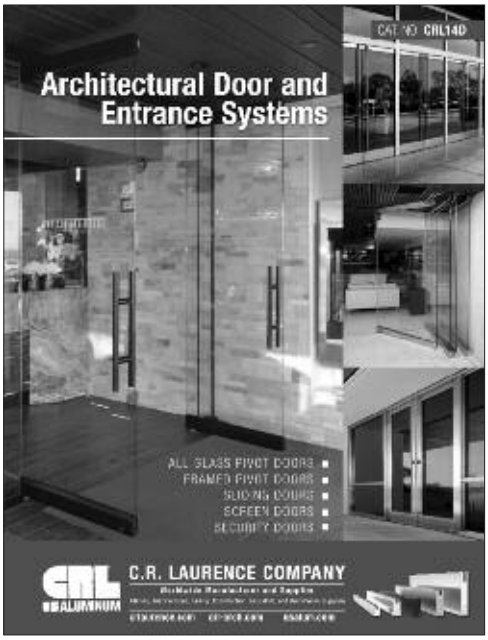

- All Glass Pivot Doors
- Framed Pivot Doors
- Sliding Doors
- Screen Doors
- Security Doors

Our CRL14D Architectural Door and Entrance Systems Catalog features the largest line of All Glass and Framed Pivot Doors, All-Glass and Framed Sliding Doors, and Screen Door Systems. We've expanded our selection of architectural metal and glass hardware for the construction of entrances in commercial, retail, and residential buildings. There are color photos of finished projects, as well as helpful technical data. The CRL14D Architectural Door and Entrance Systems Catalog is your complete directory to our performance driven entrance systems.

Your Largest Selection Ever Offered of All Glass and Framed Pivot Doors, Sliding Doors, and Screen Door Systems.

---

new

CAT. NO. SC14

- Sunshade Systems
- Light Shelf Systems
- Aluminum Vertical Screens
- Aluminum Trellis
- Sun Control Panels
- Aluminum and Steel Canopies
- Glass Awnings
- Custom Sunshades

The SC14 Sun Control Systems Catalog features our expanded selection of Architectural Sunshades and Canopies. Custom Sun Control Systems are available, built exactly to your specifications or our stock architectural hardware is available so you may design and build your own. The end result is an elegant and functional Sunshade or Canopy System that is sure to impress. The SC14 Sun Control Systems Catalog has color photos of finished projects as well as helpful technical data.

Over 30 Full-Color Pages of Sunshades and Canopies that can transform an Indistinct Building into a Space of Beauty and Expression.

Online usalum.com By Phone (800) 262-5151 Ext. 5305
Online crlaurence.com By Phone (800) 421-6144 Ext. 5305

CRL/U.S. ALUMINUM

Visit the U.S. Aluminum Web Site

The entire scope of our products and services can be quickly and easily accessed online through our ever-evolving web site, **usalum.com**. Areas of interest are easily navigated through simple drop down menu selections that are clearly and colorfully presented.

You can examine our systems, search our resource guides, and view our project galleries. If you wish to contact any of our Service Centers there's a directory of phone numbers and addresses. You can also request product literature and installation guides or just catch up on the latest U.S. Aluminum news and press releases.

New features, such as online stock checks, updated product guides, and links to our social media pages are frequently updated to enhance the value of the web site for all users.

We invite you to visit us at **usalum.com**, and to contact us with your comments and suggestions about how we can make it an even more valuable business resource.

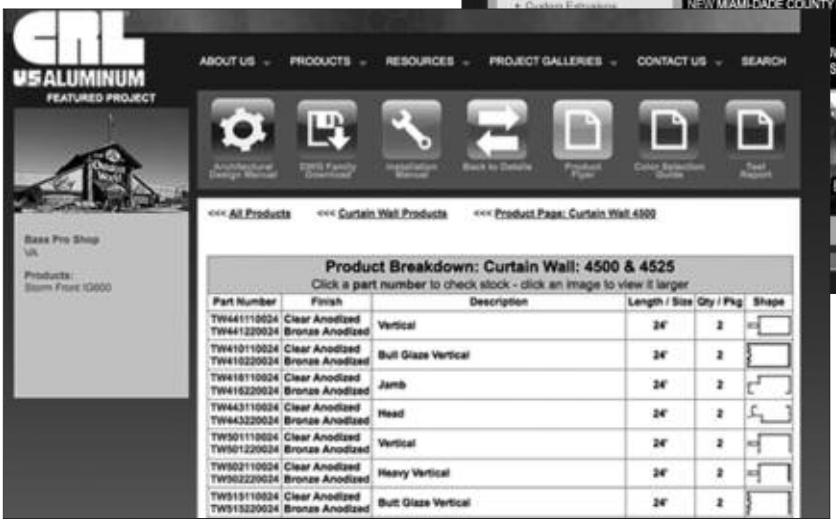

Online usalum.com By Phone (800) 262-5151 Ext. 5305
Online crlaurence.com By Phone (800) 421-6144 Ext. 5305

Product Information on the Web Site

To find information on our systems simply click on the word **PRODUCTS** in the top bar. A drop down menu of the various systems will appear.

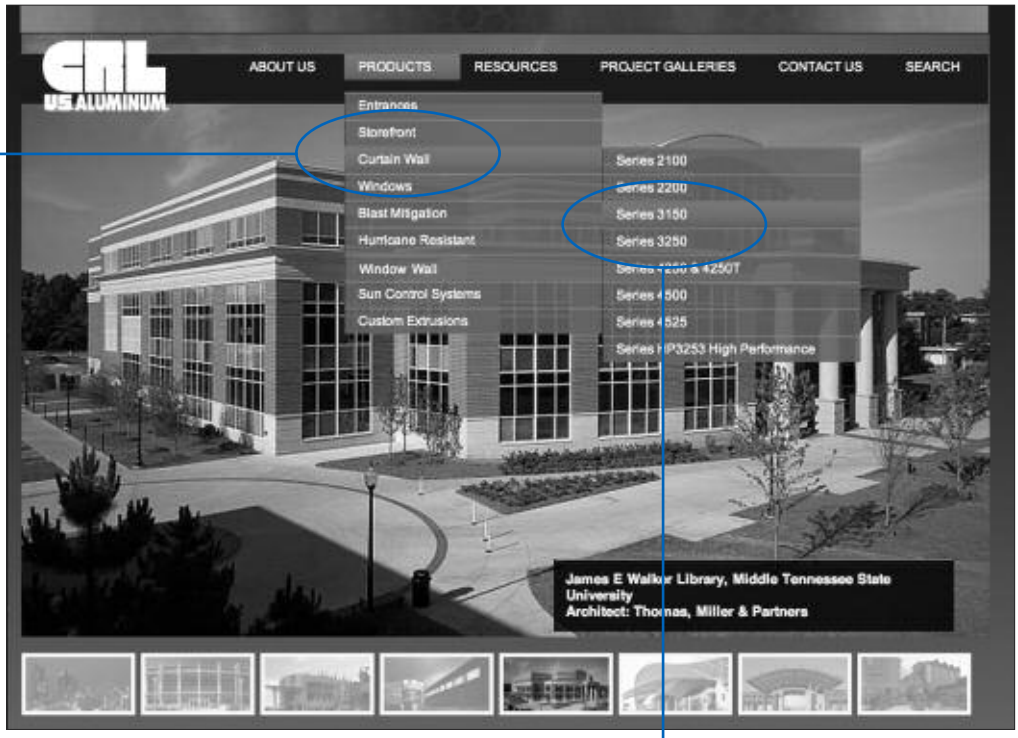

Once you click on one of the systems a second drop down menu of that system's series will appear. Click on the series you wish to review to open the next page.

This page also gives you access to other major sources of information about the selected product, such as our architectural manual, product flyers, and installation instructions. Simply click on one of the icons to proceed with your review.

Now that the selected series has opened you will see a summary of the product with bullet points that accentuate the major benefits.

CRL/U.S. ALUMINUM

Product Information on the Web Site

Architectural Design Manual

This link displays our Architectural Design Manual pages for the selected series.

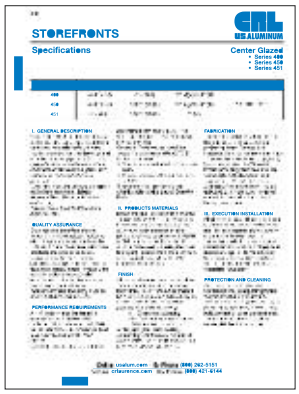

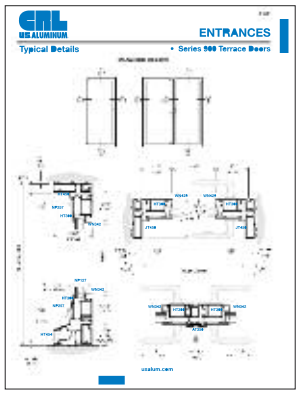

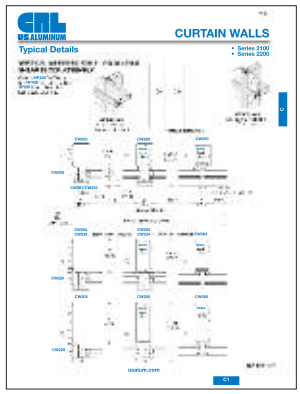

DWG Family Download

This link takes you to our file of CAD Drawings for the selected series.

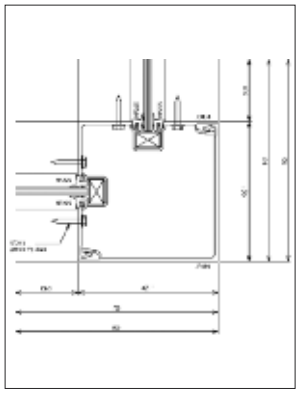

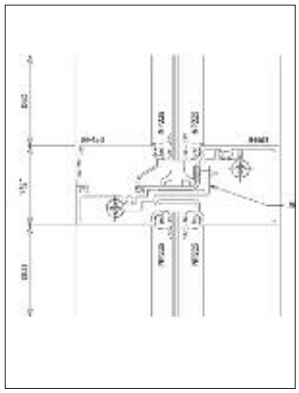

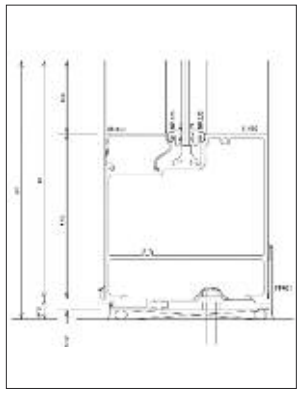

Installation Manual

This link displays the Installation Manual for the selected series.

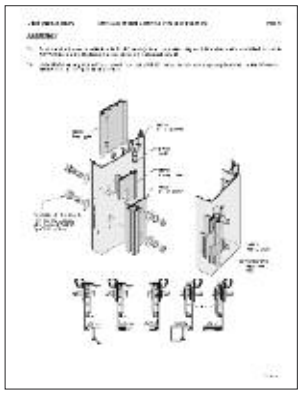

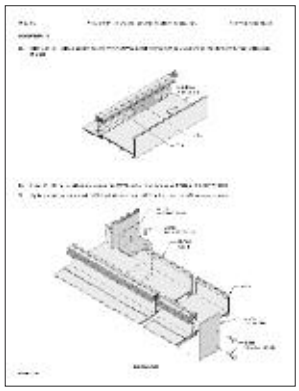

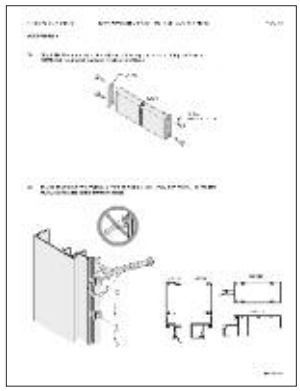

NOTE: Displayed images are samples from **usalum.com** at time of publication. All links are subject to update without notice.

CRL/U.S. ALUMINUM

Product Information on the Web Site

Product Flyer

This link displays the color flyer for the selected series.

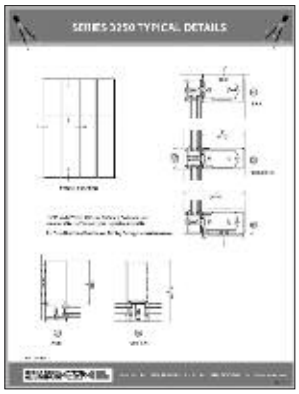

Flyers, spec data, and other printed materials for all U.S. Aluminum systems and accessory products are available through U.S. Aluminum Service Centers or by calling us toll free at (800) 262-5151 from anywhere in the United States and Canada.

Color Selection Guide

This link displays the Color Selection Guide for standard U.S. Aluminum finishes.

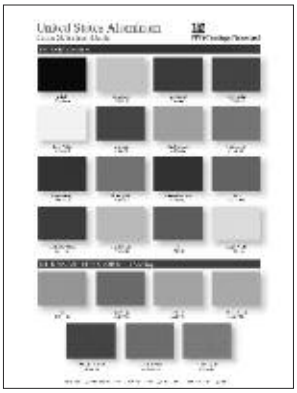

All U.S. Aluminum systems have a range of standard colors and finishes from which to choose. We can also provide special architectural finishes to meet any project requirements through inter-company anodizing and painting facilities.

In addition, many of our systems can be fabricated in a dual or two-tone color scheme by specifying different finishes for the exterior face covers and the interior mullions.

3 Part Specification

This link displays Architectural Guide Specifications for the selected series.

NOTE: Displayed images are samples from **usalum.com** at time of publication. All links are subject to update without notice.

CRL/U.S. ALUMINUM

Product Information on the Web Site

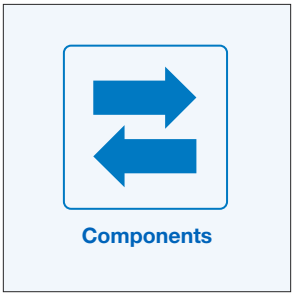

This link displays the components list for the selected series.

Ordering Individual Extrusions and Accessory Components

- **Individual Parts for System Repairs and Modifications Are Available**
- **Detailed Part Numbers Let You Get Online Stock Checks Quicker**

Complete U.S. Aluminum Systems typically come with all of the components required to make a complete installation. But if you are ever called to make repairs or modifications to a previously installed system you can get the parts you need that will match the system perfectly. Clicking on the Components icon presents you with images, descriptions, and part numbers that make ordering or checking stock quick and easy. Once you've made your selection you can place your order with your nearest U.S. Aluminum Service Center, or call our national toll free number at (800) 262-5151.

Aluminum Extrusions

Aluminum extrusion profiles are shown with a description of their function within the system, their standard stock length, and the part numbers for the primary finishes, typically Clear Anodized and Bronze Anodized.

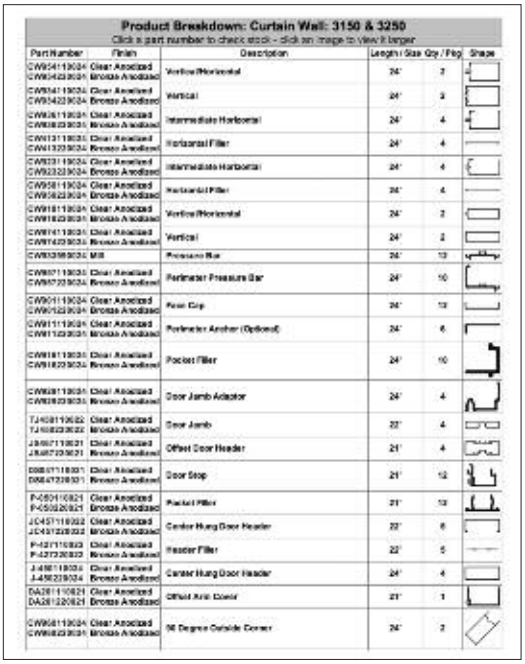

Product Breakdown: Curtain Wall: 3150 & 3250

Click a part number to check stock - click an image to view it larger

Part Number	Finish	Description	Length / Size	Qty / Pkg	Shape
CW9541190 CW9542390	Clear Anodized Bronze Anodized	Vertical/Horizontal	24'	2	
CW9541190 CW9542390	Clear Anodized Bronze Anodized	Vertical	24'	2	
CW9611190 CW9612390	Clear Anodized Bronze Anodized	Intermediate Horizontal	24'	4	
CW9131190 CW9132390	Clear Anodized Bronze Anodized	Horizontal Filler	24'	4	
CW9231190 CW9232390	Clear Anodized Bronze Anodized	Intermediate Horizontal	24'	4	
CW9581190 CW9582390	Clear Anodized Bronze Anodized	Horizontal Filler	24'	4	
CW9181190 CW9182390	Clear Anodized Bronze Anodized	Vertical/Horizontal	24'	2	
CW9141190 CW9142390	Clear Anodized Bronze Anodized	Vertical	24'	2	
CW9338903	Mill	Pressure Bar	24'	12	
CW9671190 CW9672390	Clear Anodized Bronze Anodized	Perimeter Pressure Bar	24'	10	
CW9011190 CW9012390	Clear Anodized Bronze Anodized	Face Cap	24'	12	
CW9111190 CW9112390	Clear Anodized Bronze Anodized	Perimeter Anchor (Optional)	24'	6	
CW9181190 CW9182390	Clear Anodized Bronze Anodized	Pocket Filler	24'	10	
CW9281190 CW9282390	Clear Anodized Bronze Anodized	Door Jamb Adaptor	24'	4	
TJ1081190 TJ1082390	Clear Anodized Bronze Anodized	Door Jamb	22'	4	
JB9271190 JB9272390	Clear Anodized Bronze Anodized	Offset Door Header	21'	4	
DS9171190 DS9172390	Clear Anodized Bronze Anodized	Door Stop	21'	12	
P-C90110 P-C90120	Clear Anodized Bronze Anodized	Pocket Filler	21'	12	
JC9371190 JC9372390	Clear Anodized Bronze Anodized	Center Hung Door Header	22'	6	
P-S2711 P-S2720	Clear Anodized Bronze Anodized	Header Filler	22'	5	
J-H9611 J-H9620	Clear Anodized Bronze Anodized	Center Hung Door Header	24'	4	
DA2811 DA2812	Clear Anodized Bronze Anodized	Offset Anti Dover	21'	1	
CW9681190 CW9682390	Clear Anodized Bronze Anodized	90 Degree Outside Corner	24'	2	

Accessory Components

Accessory components are shown with a description of their function within the system, the quantity of pieces in a standard package, and the part number for ordering. Some components can be used in multiple systems.

Product Breakdown: Curtain Wall: 3150 & 3250

Click a part number to check stock - click an image to view it larger

Part Number	Finish	Description	Length / Size	Qty / Pkg	Shape
[illegible]		Temporary Glass Retainer for Wall Glass		50	
HP4200		Exterior Gasket		250'	
HP4200		Interior Gasket		250'	
SP4500		Spacer Gasket for Butt Glass		250'	
SB02500		Setting Block		100	
AB9000		Edge Block		50	
RS2200		Pressure Bar Screw		200	
CP0500		Closure Plate for Outside Corner		10	
WD9000		Water Dam for Outside Corner		10	
CP0500		Closure Plate for Inside Corner		10	
WD9000		Water Dam for Inside Corner		10	
AP0500		Corner Shear Block for 4", 6", & 8" Mullions (Inside & Outside Corners)		20	
AP0700		Wall Jamb Anchor at Head & Sill for CW9[illegible]		6	
AP0500		Intermediate Vertical Anchor at Head & Sill for CW9[illegible]		12	
AP0500		Intermediate Vertical Anchor at Head & Sill for CW9[illegible]		12	
AP0700		Wall Jamb Anchor at Head & Sill for CW9[illegible]		6	
AP0500		Intermediate Vertical Anchor at Head & Sill for CW9[illegible]		12	
AP0500		Intermediate Vertical Anchor at Head & Sill for CW9[illegible]		12	
AP0700		Wall Jamb Anchor at Head & Sill for CW9[illegible]		6	
AP0500		Intermediate Vertical Anchor at Head & Sill for CW9[illegible]		12	
AP0500		Intermediate Vertical Anchor at Head & Sill for CW9[illegible]		12	
AP0500		Outside 90 Degree Corner Anchor at Head & Sill for CW9[illegible]		10	
AP0500		Inside 90 Degree Corner Anchor at Head & Sill for CW9[illegible] (Butt Glass Only)		10	

NOTE: Displayed images are samples from **usalum.com** at time of publication. All links are subject to update without notice.

Product Information on the Web Site

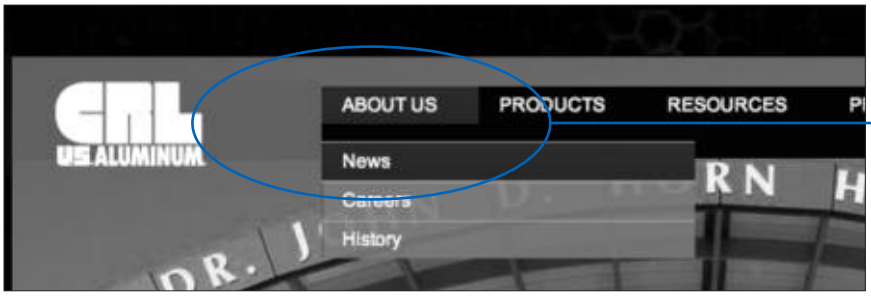

This link displays our most recent press releases and other news about the growth of our product selection and new services that become available. There is also a place where we offer career positions that may become available, plus a brief history of the company and our new union with C.R. Laurence.

This link provides access to many of the features that our customers have told us are the most useful. You can check available stock in our Service Centers; download our literature in PDF format; review our design guides and assorted architectural catalogs from C.R. Laurence; review company policies regarding warranties, accounting terms and conditions. We also make available an extensive glossary of the terminology and abbreviations used by our industry. You can even access links to industry groups and publications from this menu.

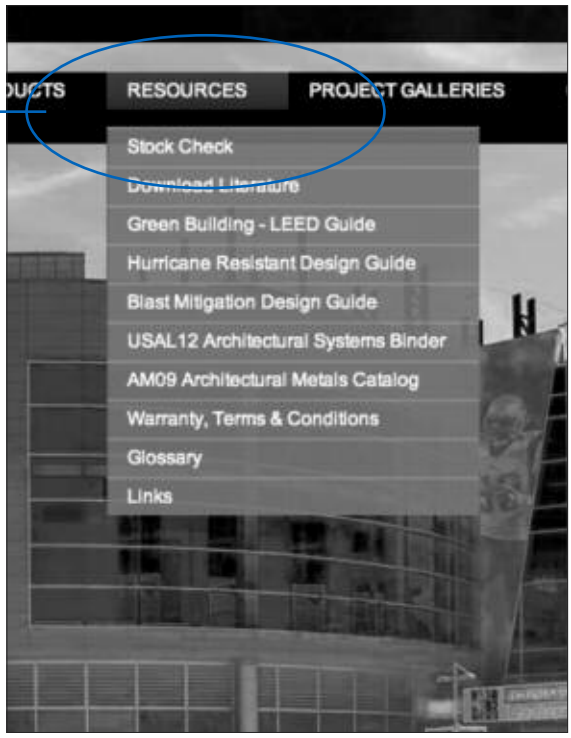

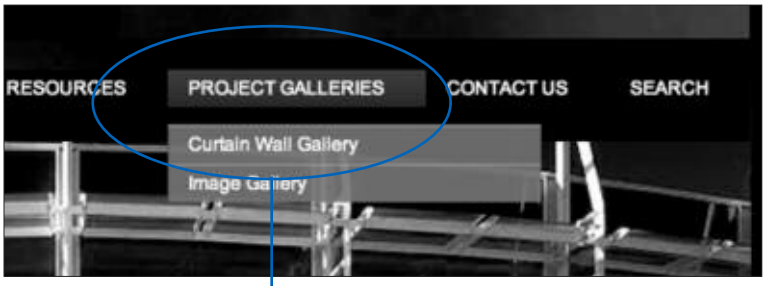

This link allows you to view images from our galleries of completed projects. Click through these images to see how U.S. Aluminum systems have been used to construct beautiful and functional entrances and storefronts, curtain walls, windows, and sun control systems.

NOTE: Displayed images are samples from **usalum.com** at time of publication. All links are subject to update without notice.

CRL/U.S. ALUMINUM

Product Information on the Web Site

This link provides information on how to contact or visit all U.S. Aluminum Service Centers. When you click on Locations you get a map showing our Service Centers in the U.S. and Canada. Click on any Service Center and you'll get driving directions and a map.

This link also provides information on how to contact the U.S. Aluminum Sales Representative that serves your area.

Western U.S.	Central U.S.	Eastern U.S.	Canada
Salesman Name	**Cell Phone**	**State**	**Area Covered if not the whole state**
Carl Lappe	(800) 262-5151	Arizona	
		California	San Diego
Gordon Peterson	(800) 262-5151	Colorado	Denver
		Utah	
John Labare	(800) 262-5151	California	Orange County
Lou Joella		California	Los Angeles
		Nevada	Las Vegas
Steve Jones	(800) 262-5151	California	Union City
		Nevada	Reno
Todd Sheppard	(800) 262-5151	Oregon	
		Washington	Seattle

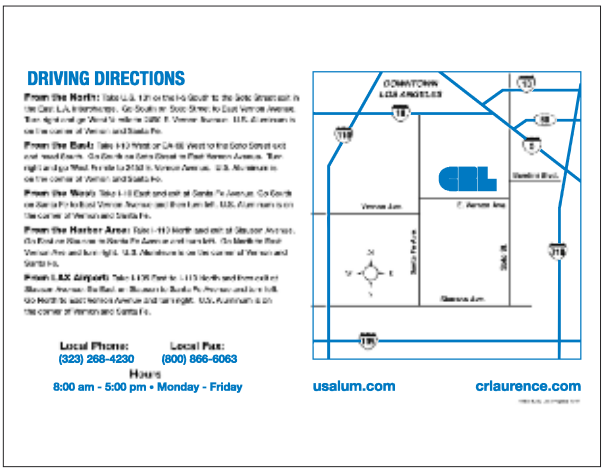

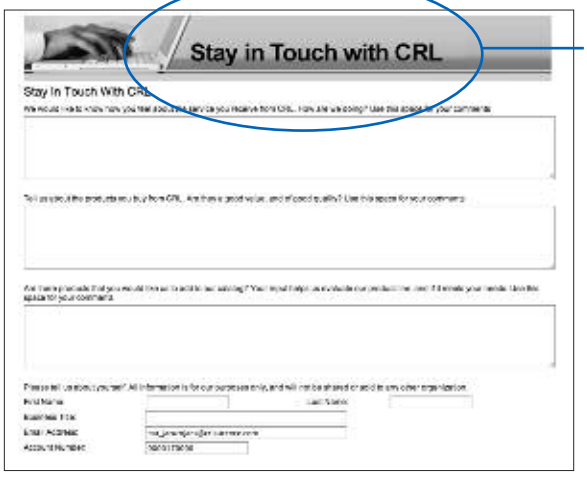

You can use this link to send us your comments and suggestions about any aspect of service or product quality you receive from U.S. Aluminum or C.R. Laurence Company.

The U.S. Aluminum web site makes it easier for you to do business with us, and we intend to continue our efforts to improve its value to you. We want your online experience with U.S. Aluminum to be pleasant and productive, and welcome at any time your comments on how we can make it better.

NOTE: Displayed images are samples from **usalum.com** at time of publication. All links are subject to update without notice.

H

ENTRANCES

- Series 250/400/550 Entrance Doors
- Series 800/850 Durafront Doors
- Platinum Series Doors
- Thermal Entrances
- Balanced Doors
- Series 900 Terrace Doors
- Series 2000 Sliding Doors
- Elephant Doors
- Accessory Hardware

Toll Free Phone Service
(800) 262-5151
Ext. 5305

Toll Free Fax Service
(866) 262-3299
U.S. and Canada

CRL®
U.S. ALUMINUM

usalum.com

H ENTRANCES

CRL U.S. ALUMINUM

Waxahachie Civic Center
Waxahachie, TX

U.S. Aluminum has long been an industry leader in the manufacture of entrance doors and frames. Our products are consistently built to the highest industry standards, ensuring years of reliable service. Job-tested, mechanically fastened and welded corner construction creates a sturdy structural corner assembly. All doors offer clean lines, and are supplied with push-pull hardware and maximum security locks.

All U.S. Aluminum Entrances can be custom modified to the specific requirements of your project. Our product specialists will work with you to ensure the entrance hardware you order from us will meet your needs and the approval of your clients.

For a complete Glossary of Common Terms see pages 62-P1 thru 68-P1.

SYSTEM **PAGES**

- **Series 250/400/550 Entrance Doors ..... 01-H1 thru 24-H1**
- **Series 800/850 Durafront Doors ..... 01-H2 thru 15-H2**
- **Platinum Series Doors ..... 01-H3 thru 09-H3**
- **Thermal Entrances ..... 01-H4 thru 09-H4**
- **Balanced Doors ..... 01-H5 thru 09-H5**
- **Series 900 Terrace Doors ..... 01-H6 thru 06-H6**
- **Series 2000 Sliding Doors ..... 01-H7 thru 08-H7**
- **Elephant Doors ..... 01-H8 thru 08-H8**
- **Accessory Hardware ..... 01-H9 thru 40-H9**

For information or other assistance, use our toll free phone or fax service numbers from anywhere in the U.S. or Canada

Toll Free Phone (800) 262-5151 Ext. 5305 Toll Free Fax (866) 262-3299

Contact us through our web site at usalum.com

ENTRANCES

Table of Contents

- Series 250
- Series 400
- Series 550

SECTION H1

PAGE

SPECIFICATIONS 02-H1
TECHNICAL DATA 03-H1
DOOR FEATURES, OPTIONS, AND PUSH/PULL HARDWARE 04-H1
TYPICAL DETAILS ....05-H1 thru 07-H1
OPTIONS 08-H1
DOOR CORNER CONSTRUCTION 09-H1
GLASS SIZE FORMULAS ....10-H1 thru 13-H1
STOCK DOORS ....14-H1 thru 17-H1
STOCK DOOR FRAMES ....18-H1 thru 21-H1
STOCK HEADERS AND THRESHOLDS ....22-H1 and 23-H1
VANGUARD SECURITY ASTRAGAL, AND CUSTOM HANDLES 24-H1

Project: Retail Entrance, Dallas, TX

Due to the diversity in state/provincial, local, and federal laws and codes that govern the design and application of architectural products, it is the responsibility of the individual architect, owner, and installer to ensure that products selected for use on projects comply with all applicable building codes and laws. U.S. Aluminum exercises no control over the use or application of its products, glazing materials, and operating hardware, and assumes no responsibility thereof.

The rapidly changing technology within the architectural aluminum products industry demands that U.S. Aluminum reserve the right to revise, discontinue or change any product line, specification or electronic media without prior written notice.

NOTE: Dimensions in parentheses ( ) are millimeters unless otherwise noted.
Other metric units shown in this publication are:

m - meter	Kg - kilogram
Pa - pascal	KPa - kilopascal
MPa - megapascal	

ENTRANCES

Specifications

- Series 250
- Series 400
- Series 550

SECTION 08 11 16 ALUMINUM DOORS AND FRAMES

SERIES	STILES	TOP RAIL	BOTTOM RAIL	GLAZING INFILL
250 Narrow Stile	2" (50.8)	2-1/8" (54)	3-3/16" (81)	1/4" (6) or 1" (25)
400 Medium Stile	3-1/2" (88.9)	3-3/16" (81)	6-1/2" (165.1)	1/4" (6) or 1" (25)
550 Wide Stile	5" (127)	5-1/2" (139.7)	6-1/2" (165.1)	1/4" (6) or 1" (25)
A.D.A. Bottom Rail Option for Any Series			9-1/2" (241.3)	

I. GENERAL DESCRIPTION

Work Included: The glazing contractor shall furnish all necessary materials, labor, and equipment for the complete installation of aluminum entrance doors, door frames, and hardware as detailed on the drawings and specified herein.
Work Not Included: Structural support of the framing system, wood framing, structural steel, masonry, and final cleaning.

QUALITY ASSURANCE

For purposes of designating type and quality for work in this section, drawings and specifications are based on one of the following U.S. Aluminum Series 250, 400 or 550 Entrance Doors.
Optional: Door shall have A.D.A. 9-1/2" (241.3) bottom rail.
When substitute products are to be considered, supporting technical literature, samples, and drawings must be submitted 10 days prior to bid date in order to make a valid comparison of the products involved.

II. PRODUCT MATERIALS

Door members shall be extruded architectural aluminum 6063-T5 alloy and temper. Major portions of all door sections, except glazing beads, shall be nominal .125 (3.2) inch. Wall thickness of frame members shall be nominal .093 (2.4) inch. Screws, nuts, washers, bolts, rivets, and other fastening devices shall be aluminum, stainless steel or other non-corrosive materials.

DOOR CONSTRUCTION

Door stiles and rails shall be tubular sections accurately joined at corners with heavy concealed reinforcement brackets secured with bolts, screws, and then MIG welded. Doors shall have snap-in stops with E.P.D.M. glazing gasket on both sides of the glass. No exposed screws shall be permitted. Each door leaf shall be equipped with an adjusting mechanism, located in the top rail near the lock stile, which provides for minor clearance adjustments after installation.
A hard-backed poly-pile weatherstrip shall be installed in both stiles of center hung single doors and in hinge stiles of center hung pairs of doors. Offset pivoted or butt hung doors shall have weatherstripped doorstops at frame jambs and header. The active meeting stile of all pairs of doors shall have an adjustable astragal with a double line of weatherstripping.
OPTIONAL: Door bottom rail will be weatherstripped with an E.P.D.M. blade gasket sweep strip applied with concealed fasteners. (**NOTE:** This option is required for high performance conditions.)
OPTIONAL: Door bottom rail shall receive a concealed weatherstripped insert.

HARDWARE

Hardware for aluminum doors and door frames shall be the entrance manufacturer's standard. If custom hardware is to be furnished by others, templates and physical hardware must be submitted prior to any fabrication.

FINISH

All exposed framing surfaces shall be free of scratches and other serious blemishes. Aluminum extrusions shall be given a caustic etch followed by an anodic oxide treatment to obtain...
(Specify one of the following):
_____#11 Clear anodic coating
_____#22 Dark Bronze anodic coating
_____#33 Black anodic coating

A Fluoropolymer paint coating conforming with the requirements of AAMA 2605. Color shall be *(Specify a U.S. Aluminum standard color).*

III. EXECUTION INSTALLATION

All items under this heading shall be set in their correct locations as shown in the details and shall be level, square, plumb, at proper elevation and in alignment with other work in accordance with the manufacturer's installation instructions and approved shop drawings. All joints between entrance framing and the building structure shall be sealed in order to secure a watertight installation.
Upon completion of the installation of the entrances, it shall be the contractor's responsibility to make all necessary final adjustments to attain normal operation of each door and its mechanical hardware.

PROTECTION AND CLEANING

After installation the General Contractor shall adequately protect exposed portions of the aluminum entrance work from damage by grinding and polishing compounds, plaster, lime, acid, cement or other contaminants. The General Contractor shall be responsible for final cleaning.

ENTRANCES

Technical Data

- Series 250
- Series 400
- Series 550

FOR 1/4" (6) OR 1" (25) GLAZING

As an industry leader in the manufacture of entrance doors and frames, U.S. Aluminum consistently builds products to meet the highest industry standards, ensuring years of reliable service. Job-tested, mechanically fastened and welded corner construction creates a rugged structural corner assembly. All doors offer clean lines and are supplied with unique Astral II push/pull hardware and maximum security locks. These entrances can easily accommodate a wide variety of custom hardware for specific job requirements.

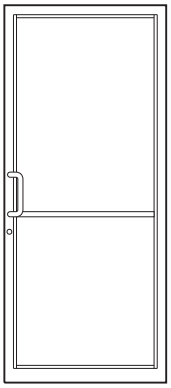

Series 250 - Narrow Stile
(Offset Hung Door Shown)

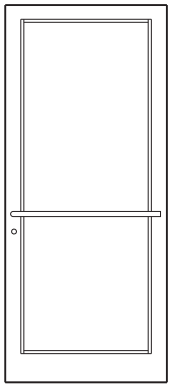

Series 400 - Medium Stile
(Center Hung Door Shown)

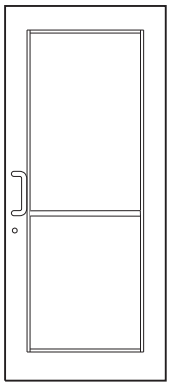

Series 550 - Wide Stile
(Offset Hung Door Shown)

Standard Features:

Glass Stops - Pressure type glass stops (square or beveled) with E.P.D.M. glazing gaskets permit time saving installation of 1/4" (6) glass. Optional glass stops are available for 1" (25) infills. Setting blocks for glass are preset at the factory.
Adjustable Leveling Screw - A simple adjustment on the leveling screw, concealed in the top rail of the door, compensates for minor variances in door openings after installation.
Adjustable Astragal - All pairs of doors come with spring-loaded fully adjustable dual weathered astragals for optimum air resistance. Binding or gaps at the meeting stiles can be easily corrected by simple adjustments. The full length dual weather stripping on the astragal is not interrupted by the deadlock.

Accessories:

Hinging Hardware
- Offset Pivots for Single Acting Doors
- Butt Hinges for Single Acting Doors
- Concealed Center Pivots for Use With Double Acting Doors

Closers
- Exposed Overhead
- Concealed Overhead
- Floor

Panic Exit Devices
- Conventional Cross Bar
- Mid-Panel Panic

Vanguard Security Astragal - See page 24-H1.

*** Maximum Recommended Doors Sizes:**
48" (1.219 m) X 96" (2.438 m)
* Requires special hardware. Please consult with factory.

SERIES	STILES	TOP RAIL	BOTTOM RAIL	TRAFFIC APPLICATIONS
250 Narrow Stile	2" (50.8)	2-1/8" (54)	3-3/16" (81)	Light to Moderate
400 Medium Stile	3-1/2" (88.9)	3-3/16" (81)	6-1/2" (165.1)	Moderate to Heavy
550 Wide Stile	5" (127)	5-1/2" (139.7)	6-1/2" (165.1)	Heavy
A.D.A. Bottom Rail Option for Any Series			9-1/2" (241.3)	

ENTRANCES

Door Features and Options

FEATURES	SERIES				
	250 NARROW STILE	400 MEDIUM STILE	550 WIDE STILE	800 DURAFRONT	850 DURAFRONT
Single Glaze 1/4" (6)	●	●	●	●	●
Dual Glaze 1" (25)	●	●	●	●	●
Narrow Stile	●				
Medium Stile		●		●	
Wide Stile			●		●
Light to Moderate Traffic	●	●			
Moderate To Heavy Traffic		●	●	●	●
Heavy Traffic		●	●	●	●
Heavy To Abusive Traffic				●	●
Dual Weatherstrip Meeting Stiles	●	●	●	●	●
Adjustable Astragal	●	●	●	●	●
Swing Out	●	●	●	●	●
Swing In	●	●	●	●	●
Double Acting	●	●	●	●	●
Vanguard Security Astragal	Optional	Optional	Optional	Optional	Optional
Mid-Panel Panic	Optional	Optional	Optional	Optional	Optional
3/16" (4.8) Wall Thickness				●	●
A.D.A. Compliant	Optional	Optional	Optional	Optional	Optional

Astral II STANDARD PUSH/PULL HARDWARE

Clear Push/Pull Standard on Clear Anodized Doors and Painted Doors. Champagne Push/Pull Standard on Bronze and Black Anodized Doors. Push Bars are made from 1" (25) diameter solid aluminum with a 2-1/2" (63.5) projection at lock stile. Pull Handles are made from 1" (25) diameter, solid aluminum with a 9" (229) centerline attachment and 2-1/2" (63.5) projection. *Push/Pull Hardware is sold one each. For back-to-back handles you must order a quantity of two.
NOTE: Other Push/Pull Hardware Available see pages 12-H8 and 13-H8.

Astral II Standard Push Bars

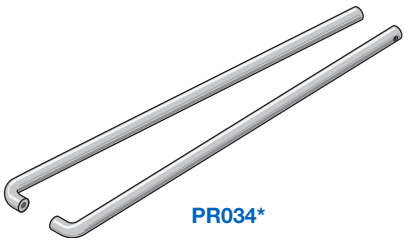

PR034*

PART NO.	DESCRIPTION	FINISH
PR03411	Push Bar	Clear
PR03425	Push Bar	Champagne

Minimum order: 1 each. Available in 36" (914), 42" (1067), and 48" (1219) sizes. Please specify.

Astral II Standard Push/Pull

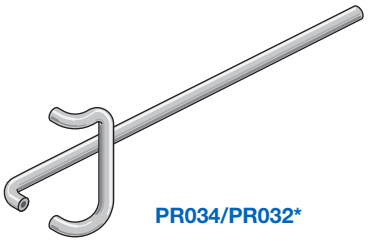

PR034/PR032*

PART NO.	DESCRIPTION	FINISH
PR03411	Push Bar	Clear
PR03211	Pull	Clear
PR03425	Push Bar	Champagne
PR03225	Pull	Champagne

Minimum order: 1 each. Must specify sizes.

Astral II Optional Pulls

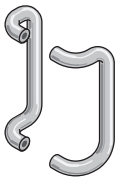

PR032*

PART NO.	DESCRIPTION	FINISH
PR03211	Pull	Clear
PR03225	Pull	Champagne

Minimum order: 1 each. Available in 9" (229), 12" (305), and 16" (406) Center-to-Center sizes. Please specify.

ENTRANCES

Typical Details

Narrow Stile • Series 250

FOR 1/4" (6) OR 1" (25) GLAZING

See pages 14-H2 and 15-H2 for Quote/Order Form Checkoff List.

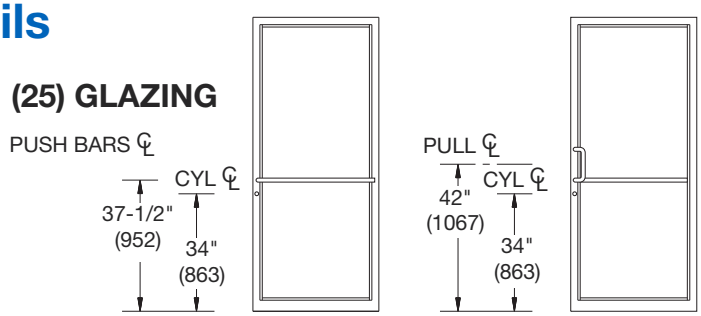

CENTER HUNG DOOR

OFFSET HUNG DOOR

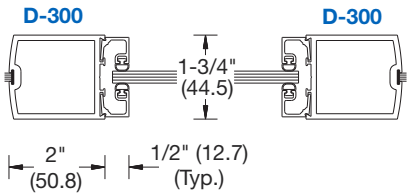

Single Door

CENTER HUNG DOORS

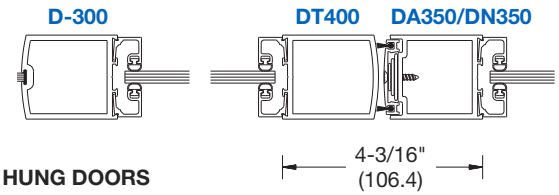

Meeting Stiles for Pair of Doors

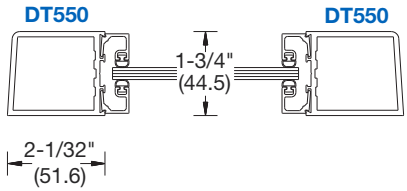

Single Door

OFFSET HUNG DOORS

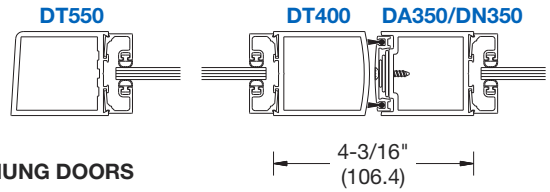

Meeting Stiles for Pair of Doors

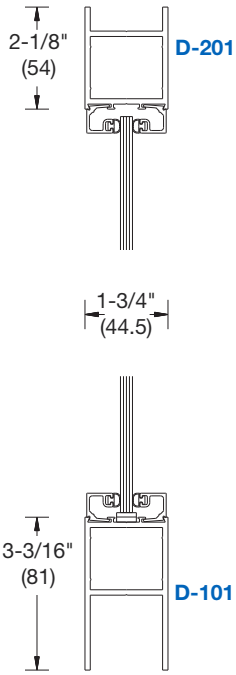

Standard
Top and Bottom Rails

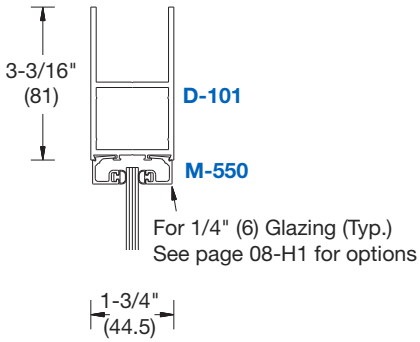

For 1/4" (6) Glazing (Typ.)
See page 08-H1 for options

Special Top Rail for Offset Hung Doors With Overhead Concealed Closers
NOTE: Special Glass Size Required.

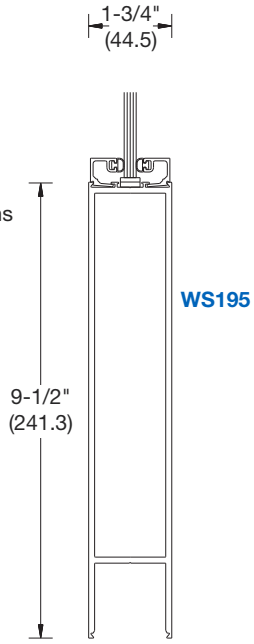

Special Bottom Rail
to Comply With A.D.A.

NOT TO SCALE

ENTRANCES

Typical Details

Medium Stile • Series 400

FOR 1/4" (6) OR 1" (25) GLAZING

See pages 14-H2 and 15-H2 for Quote/Order Form Checkoff List.

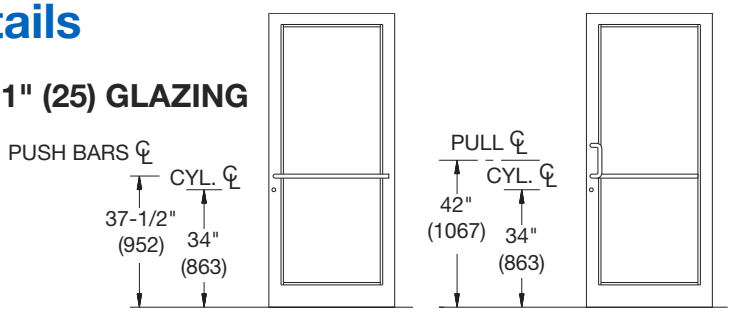

CENTER HUNG DOOR

OFFSET HUNG DOOR

CENTER HUNG DOORS

Single Door

Meeting Stiles for Pair of Doors

OFFSET HUNG DOORS

Single Door

Meeting Stiles for Pair of Doors

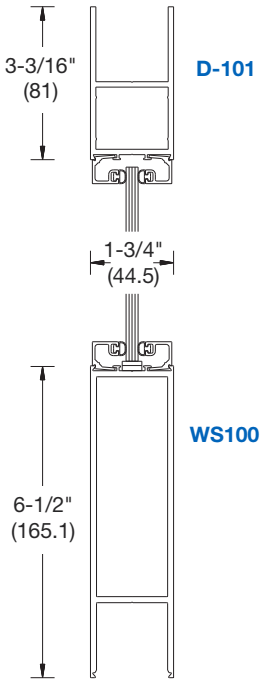

Standard
Top and Bottom Rails

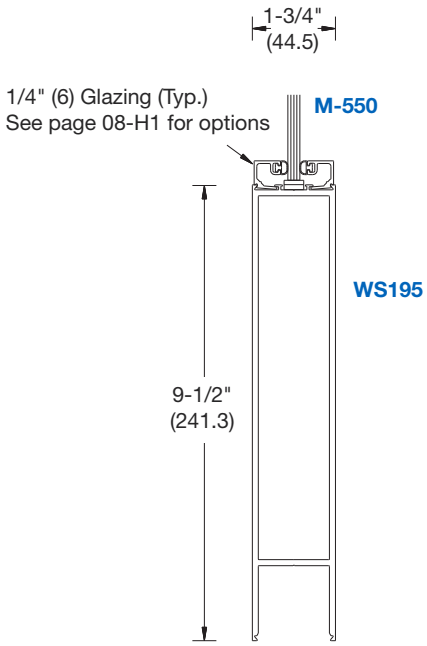

Special Bottom Rail
to Comply With A.D.A.

NOT TO SCALE

ENTRANCES

Typical Details

Wide Stile • Series 550

FOR 1/4" (6) OR 1" (25) GLAZING

See pages 14-H2 and 15-H2 for Quote/Order Form Checkoff List.

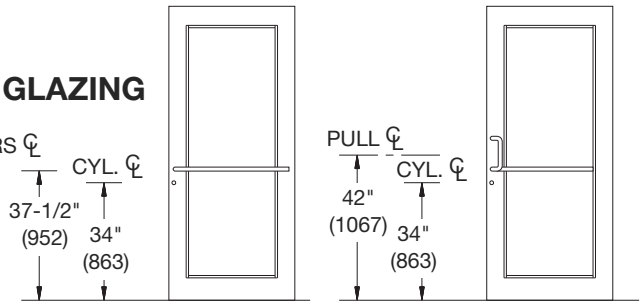

CENTER HUNG DOOR

OFFSET HUNG DOOR

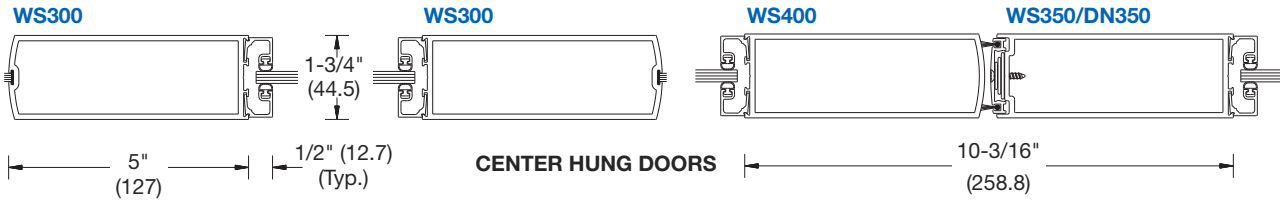

CENTER HUNG DOORS

Single Door

Meeting Stiles for Pair of Doors

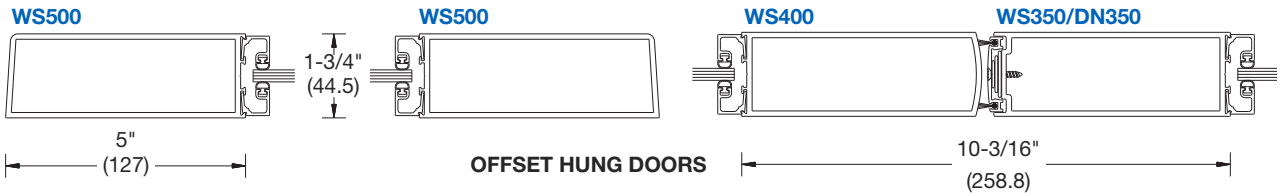

OFFSET HUNG DOORS

Single Door

Meeting Stiles for Pair of Doors

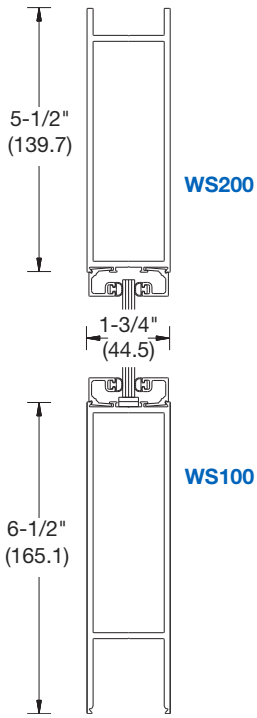

Standard
Top and Bottom Rails

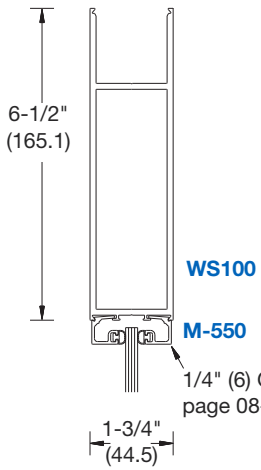

Special Top Rail for Offset Hung Doors With Overhead Concealed Closers
NOTE: Special Glass Size Required.

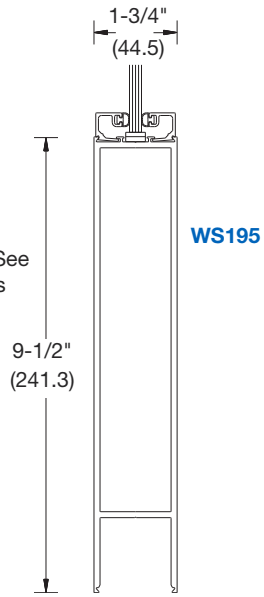

Special Bottom Rail
to Comply With A.D.A.

NOT TO SCALE

ENTRANCES

Options

- Series 250
- Series 400
- Series 550

DOOR MUNTINS

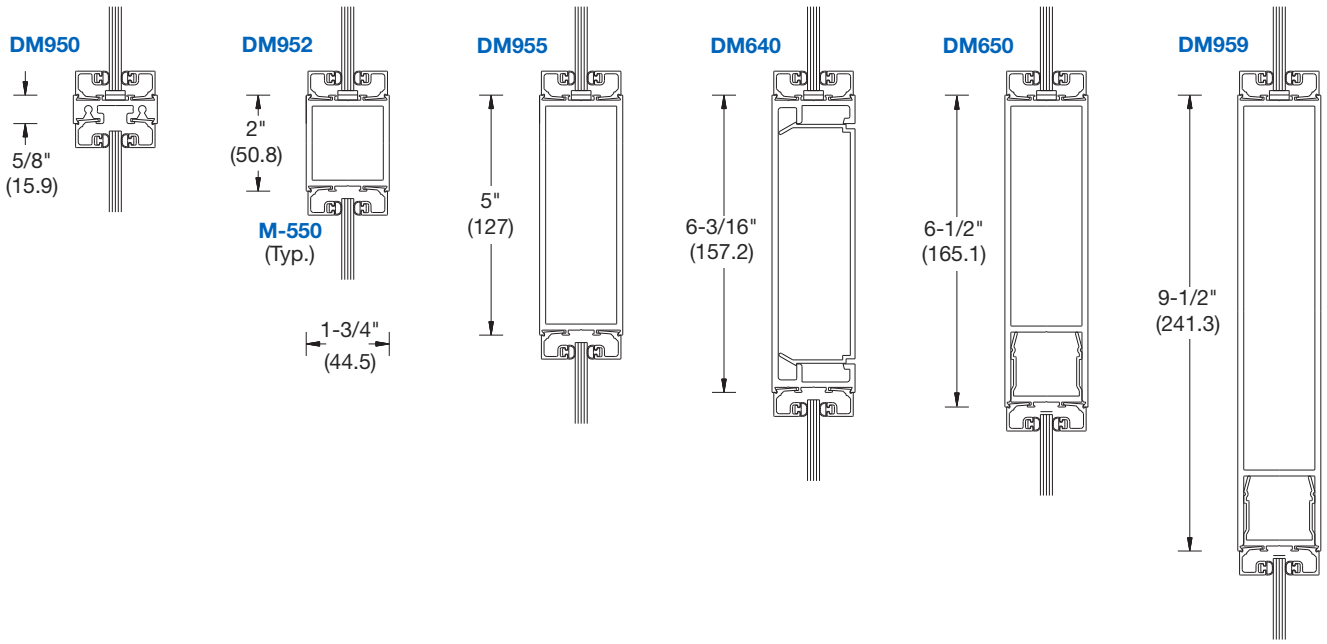

THRESHOLDS
(See Frames for Applications)

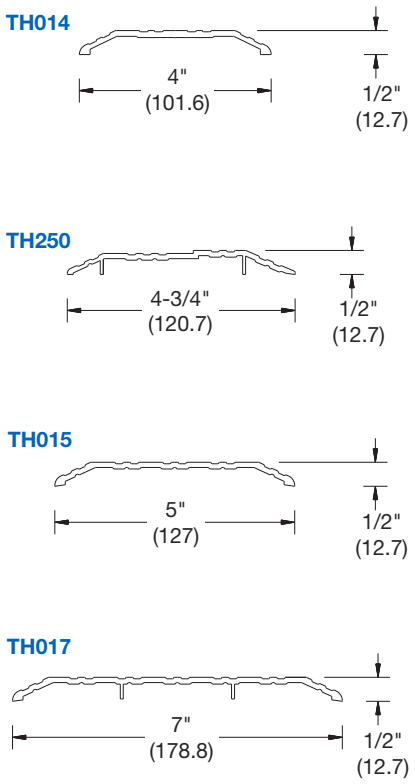

GLAZING OPTIONS

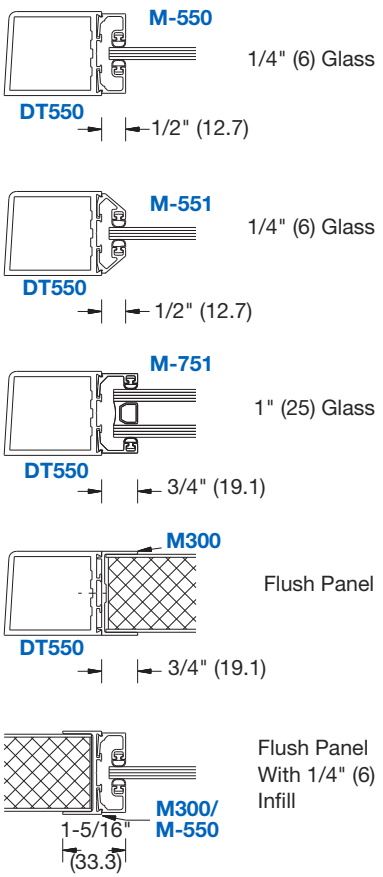

TOP AND BOTTOM WEATHERSTRIPPING

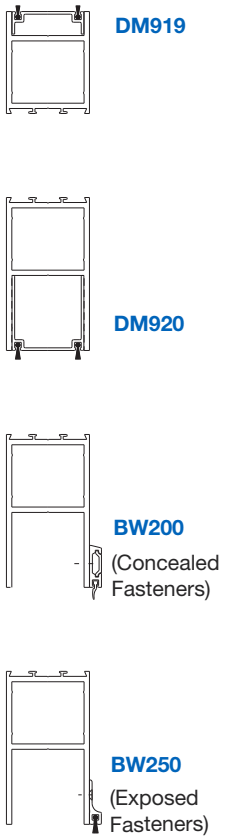

NOT TO SCALE

ENTRANCES

Door Corner Construction

- Series 250
- Series 400
- Series 550

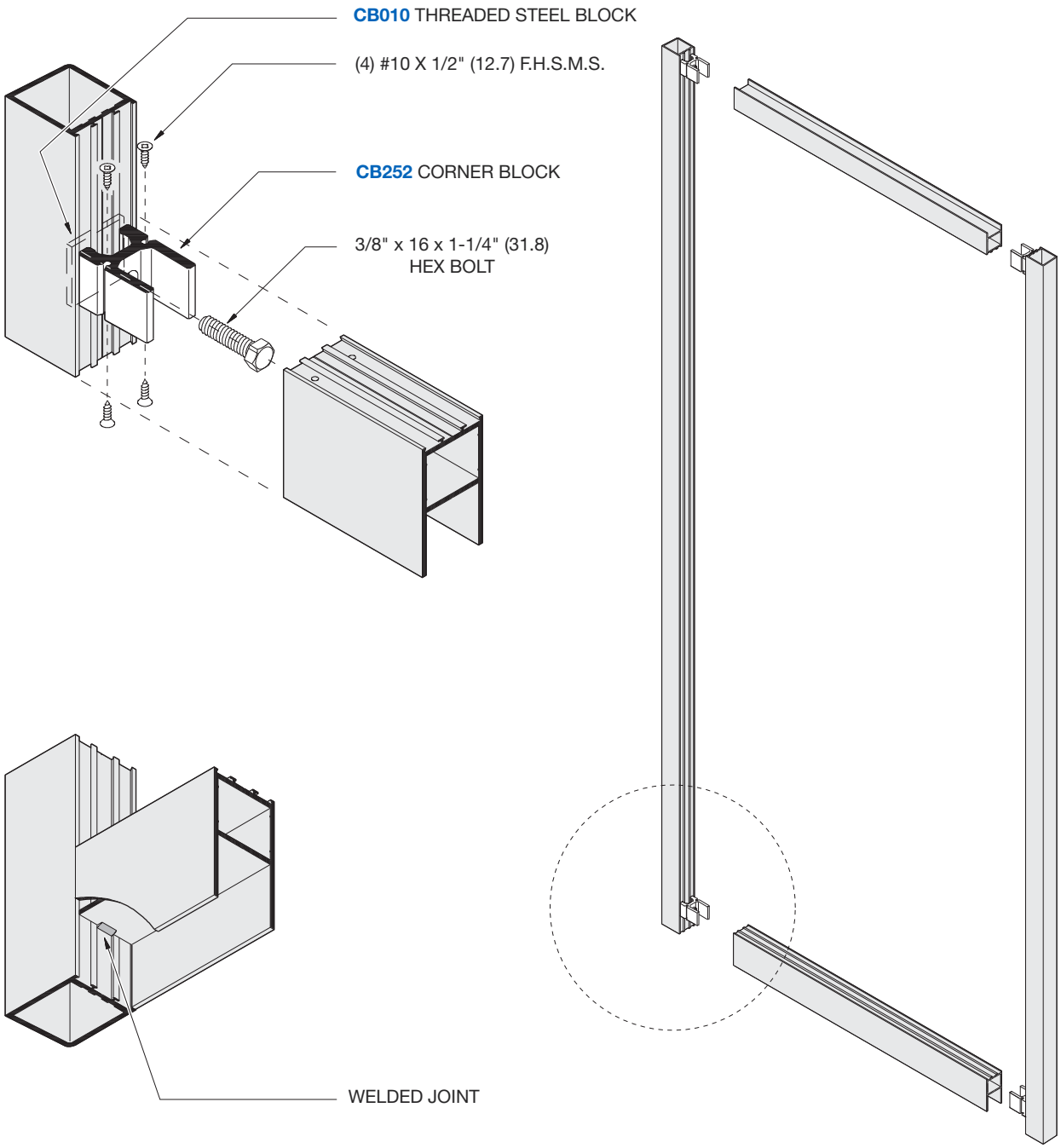

For a complete Door Quote or Order Checkoff List, please see pages 14-H2 and 15-H2 in this catalog.

ENTRANCES

Glass Formulas for Doors With Standard Bottom Rails

- Series 250
- Series 400
- Series 550

GLASS HEIGHT FORMULAS FOR RAIL COMBINATIONS AND CUSTOM HEIGHT DOORS

Door Opening Height - [Top Clearance + Top Rail Size + Top Glass Clearance + Bottom Clearance + Bottom Rail Size + Bottom Glass Clearance] = Glass Height

EXAMPLE 1: 84" Door Opening Height with Butt Hinges and 1/4" (6) Glass: D-201 Top Rail and D-101 Bottom Rail with 1/2" Threshold.
FORMULA: 84" - [2-15/32" + 3-31/32"] = 77-9/16" Glass Height Size.

EXAMPLE 2: 96" Door Opening Height with Butt Hinges and 1" (25) Glass: D-101 Top Rail and WS195 Bottom Rail with 1/2" Threshold.
FORMULA: 96" - [3-23/32" + 10-9/32"] = 82" Glass Height Size.

NOTE: Round Glass Calculations Up to the Nearest 1/16 Inch.

RAIL SIZES:

D-201	2-1/8"
D-101	3-3/16"
WS200	5-1/2"
WS100	6-1/2"
WS195	9-1/2"

DOOR CLEARANCES:

At Top Rail	1/8"
At Bottom Rail	11/16" @ 1/2" Threshold
1/4" (6) Glass	7/32" (Top) and 3/32" (Bottom)
1" (25) Glass	13/32" (Top) and 3/32" (Bottom)

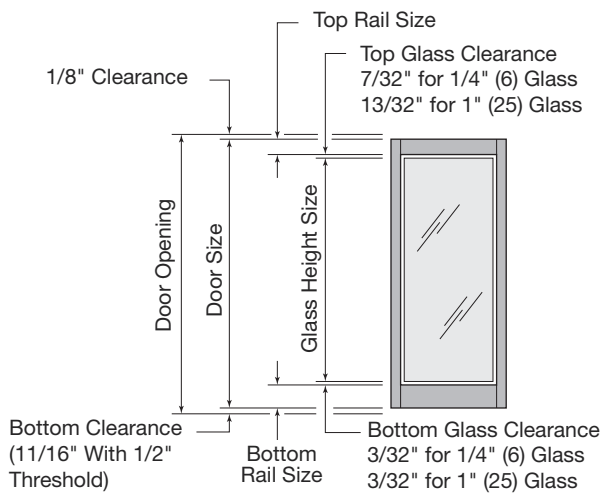

GLASS SIZES FOR STANDARD 36" X 84" CENTER HUNG DOOR LEAVES WITH OVERHEAD CONCEALED CLOSER

DOOR STILE	1/4" (6) GLASS	1" (25) GLASS
Series 250 Narrow Stile (D-201 Top, D-101 Bottom Rail)	31-7/16" x 77-9/16"	31-1/4" x 77-3/8"
Series 400 Medium Stile (D-101 Top, WS100 Bottom Rail)	28-1/2" x 73-3/16"	28-5/16" x 73"
Series 550 Wide Stile (WS200 Top, WS100 Bottom Rail)	25-1/2" x 70-7/8"	25-5/16" x 70-11/16"

Above glass sizes are for standard top and bottom rails for overhead concealed closer and 1/2" threshold. For special height glass sizes, see formulas above.

GLASS SIZES FOR 36" X 84" OFFSET DOOR LEAVES WITH SURFACE MOUNTED CLOSER

DOOR STILE	1/4" (6) GLASS			1" (25) GLASS		
	BUTT HINGES OR OFFSET PIVOTS	STANDARD GEARED HINGE	VANGUARD SECURITY ASTRAGAL	BUTT HINGES OR OFFSET PIVOTS	STANDARD GEARED HINGE	VANGUARD SECURITY ASTRAGAL
Series 250 Narrow Stile (D-201 Top, D-101 Bottom Rail)	31-7/16" x 77-9/16"	31-1/4" x 77-9/16"	30-1/16" x 77-9/16"	31-1/4" x 77-3/8"	31-1/16" x 77-3/8"	29-7/8" x 77-3/8"
Series 400 Medium Stile (D-101 Top, WS100 Bottom Rail)	28-1/2" x 73-3/16"	28-5/16" x 73-3/16"	28-5/8" x 73-3/16"	28-5/16" x 73"	28-1/8" x 73"	28-7/16" x 73"
Series 550 Wide Stile (WS200 Top, WS100 Bottom Rail)	25-1/2" x 70-7/8"	25-5/16" x 70-7/8"	25-3/8" x 70-7/8"	25-5/16" x 70-11/16"	25-1/8" x 70-11/16"	25-3/16" x 70-11/16"

Above glass sizes are for standard top and bottom rails for surface closer and 1/2" threshold. For special height glass sizes, see formulas above.

GLASS SIZES FOR 36" X 84" OFFSET DOOR LEAVES WITH OVERHEAD CONCEALED CLOSER

DOOR STILE	1/4" (6) GLASS			1" (25) GLASS		
	BUTT HINGES OR OFFSET PIVOTS	STANDARD GEARED HINGE	VANGUARD SECURITY ASTRAGAL	BUTT HINGES OR OFFSET PIVOTS	STANDARD GEARED HINGE	VANGUARD SECURITY ASTRAGAL
Series 250 Narrow Stile (D-101 Top, D-101 Bottom Rail)	31-7/16" x 76-1/2"	31-1/4" x 76-1/2"	30-1/16" x 76-1/2"	31-1/4" x 76-5/16"	31-1/16" x 76-5/16"	29-7/8" x 76-5/16"
Series 400 Medium Stile (D-101 Top, WS100 Bottom Rail)	28-1/2" x 73-3/16"	28-5/16" x 73-3/16"	28-5/8" x 73-3/16"	28-5/16" x 73"	28-1/8" x 73"	28-7/16" x 73"
Series 550 Wide Stile (WS100 Top, WS100 Bottom Rail)	25-1/2" x 69-7/8"	25-5/16" x 69-7/8"	25-3/8" x 69-7/8"	25-5/16" x 69-11/16"	25-1/8" x 69-11/16"	25-3/16" x 69-11/16"

Above glass sizes are for standard top and bottom rails for overhead concealed closer and 1/2" threshold. For special height glass sizes, see formulas above.

CRL U.S. ALUMINUM

ENTRANCES

Glass Formulas for Custom Door Widths and Heights With Standard Bottom Rails

- Series 250
- Series 400
- Series 550

GLASS HEIGHT FORMULAS FOR RAIL COMBINATIONS AND CUSTOM HEIGHT DOORS

Door Opening Height - [Top Clearance + Top Rail Size + Top Glass Clearance + Bottom Clearance + Bottom Rail Size + Bottom Glass Clearance] = Glass Height

EXAMPLE 1: 84" Door Opening Height with Butt Hinges and 1/4" (6) Glass: D-201 Top Rail and D-101 Bottom Rail with 1/2" Threshold.
FORMULA: 84" - [2-15/32" + 3-31/32"] = 77-9/16" Glass Height Size.

EXAMPLE 2: 96" Door Opening Height with Butt Hinges and 1" (25) Glass: D-101 Top Rail and WS195 Bottom Rail with 1/2" Threshold.
FORMULA: 96" - [3-23/32" + 10-9/32"] = 82" Glass Height Size.

NOTE: Round Glass Calculations Up to the Nearest 1/16 Inch.

RAIL SIZES:

D-201	2-1/8"
D-101	3-3/16"
WS200	5-1/2"
WS100	6-1/2"
WS195	9-1/2"

DOOR CLEARANCES:

At Top Rail	1/8"
At Bottom Rail	11/16" @ 1/2" Threshold
1/4" (6) Glass	7/32" (Top) and 3/32" (Bottom)
1" (25) Glass	13/32" (Top) and 3/32" (Bottom)

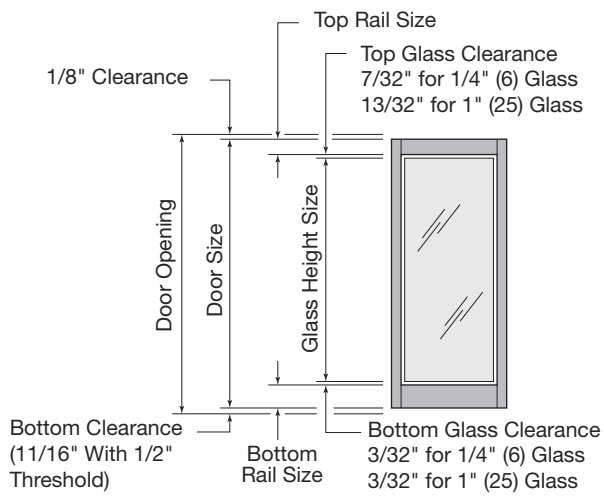

CUSTOM WIDTH DOORS FOR CENTER HUNG, BUTT HINGES, AND OFFSET PIVOTS

DOOR STILE		1/4" (6) GLASS	1" (25) GLASS
Series 250 Narrow Stile	Single Door	Door Opening Width minus 4-9/16"	Door Opening Width minus 4-3/4"
	Pair of Doors	Door Opening Width divided by 2, minus 4-9/16"	Door Opening Width divided by 2, minus 4-3/4"
Series 400 Medium Stile	Single Door	Door Opening Width minus 7-1/2"	Door Opening Width minus 7-11/16"
	Pair of Doors	Door Opening Width divided by 2, minus 7-1/2"	Door Opening Width divided by 2, minus 7-11/16"
Series 550 Wide Stile	Single Door	Door Opening Width minus 10-1/2"	Door Opening Width minus 10-11/16"
	Pair of Doors	Door Opening Width divided by 2, minus 10-1/2"	Door Opening Width divided by 2, minus 10-11/16"

CUSTOM WIDTH DOORS FOR CONTINUOUS GEARED HINGE

DOOR STILE		1/4" (6) GLASS	1" (25) GLASS
Series 250 Narrow Stile	Single Door	Door Opening Width minus 4-3/4"	Door Opening Width minus 4-15/16"
	Pair of Doors	Door Opening Width divided by 2, minus 4-3/4"	Door Opening Width divided by 2, minus 4-15/16"
Series 400 Medium Stile	Single Door	Door Opening Width minus 7-11/16"	Door Opening Width minus 7-15/16"
	Pair of Doors	Door Opening Width divided by 2, minus 7-11/16"	Door Opening Width divided by 2, minus 7-15/16"
Series 550 Wide Stile	Single Door	Door Opening Width minus 10-11/16"	Door Opening Width minus 10-15/16"
	Pair of Doors	Door Opening Width divided by 2, minus 10-11/16"	Door Opening Width divided by 2, minus 10-15/16"

CUSTOM WIDTH DOORS FOR VANGUARD SECURITY ASTRAGAL

DOOR STILE		1/4" (6) GLASS	1" (25) GLASS
Series 250 Narrow Stile	Pair of Doors	Door Opening Width divided by 2, minus 5-15/16"	Door Opening Width divided by 2, minus 6-1/8"
Series 400 Medium Stile	Pair of Doors	Door Opening Width divided by 2, minus 7-3/8"	Door Opening Width divided by 2, minus 7-9/16"
Series 550 Wide Stile	Pair of Doors	Door Opening Width divided by 2, minus 10-5/8"	Door Opening Width divided by 2, minus 10-13/16"

ENTRANCES

Glass Formulas for Standard Size Doors With A.D.A. 9-1/2" Bottom Rails

- Series 250
- Series 400
- Series 550

GLASS HEIGHT FORMULAS FOR RAIL COMBINATIONS AND CUSTOM HEIGHT DOORS

Door Opening Height - [Top Clearance + Top Rail Size + Top Glass Clearance + Bottom Clearance + Bottom Rail Size + Bottom Glass Clearance] = Glass Height

EXAMPLE 1: 84" Door Opening Height with Butt Hinges and 1/4" (6) Glass: D-201 Top Rail and WS195 Bottom Rail with 1/2" Threshold.
FORMULA: 84" - [2-15/32" + 10-9/32"] = 71-1/4" Glass Height Size.

EXAMPLE 2: 96" Door Opening Height with Butt Hinges and 1" (25) Glass: D-101 Top Rail and WS195 Bottom Rail with 1/2" Threshold.
FORMULA: 96" - [3-23/32" + 10-9/32"] = 82" Glass Height Size.

NOTE: Round Glass Calculations Up to the Nearest 1/16 Inch.

RAIL SIZES:

D-201	2-1/8"
D-101	3-3/16"
WS200	5-1/2"
WS100	6-1/2"
WS195	9-1/2"

DOOR CLEARANCES:

At Top Rail	1/8"
At Bottom Rail	11/16" @ 1/2" Threshold
1/4" (6) Glass	7/32" (Top) and 3/32" (Bottom)
1" (25) Glass	13/32" (Top) and 3/32" (Bottom)

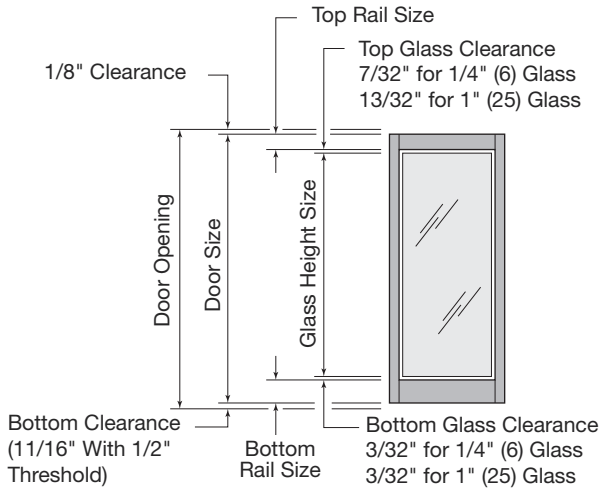

GLASS SIZES FOR STANDARD 36" X 84" CENTER HUNG DOOR LEAVES WITH 9-1/2" BOTTOM RAIL AND OVERHEAD CONCEALED CLOSER

DOOR STILE	1/4" (6) GLASS	1" (25) GLASS
Series 250 Narrow Stile (D-201 Top, WS195 Bottom Rail)	31-7/16" x 71-1/4"	31-1/4" x 71-1/16"
Series 400 Medium Stile (D-101 Top, WS195 Bottom Rail)	28-1/2" x 70-3/16"	28-5/16" x 70"
Series 550 Wide Stile (WS200 Top, WS195 Bottom Rail)	25-1/2" x 67-7/8"	25-5/16" x 67-11/16"

Above glass sizes are for standard top and bottom rails for overhead concealed closer and 1/2" threshold. For special height glass sizes, see formulas above.

GLASS SIZES STANDARD FOR 36" X 84" OFFSET DOOR LEAVES WITH SURFACE MOUNTED CLOSER

DOOR STILE	1/4" (6) GLASS			1" (25) GLASS		
	BUTT HINGES OR OFFSET PIVOTS	STANDARD GEARED HINGE	VANGUARD SECURITY ASTRAGAL	BUTT HINGES OR OFFSET PIVOTS	STANDARD GEARED HINGE	VANGUARD SECURITY ASTRAGAL
Series 250 Narrow Stile (D-201 Top, WS195 Bottom Rail)	31-7/16" x 71-1/4"	31-3/16" x 71-1/4"	29-15/16" x 71-1/4"	31-1/4" x 71-1/16"	31" x 71-1/16"	29-3/4" x 71-1/16"
Series 400 Medium Stile (D-101 Top, WS195 Bottom Rail)	28-1/2" x 70-3/16"	28-1/4" x 70-3/16"	28-1/2" x 70-3/16"	28-5/16" x 70"	28-1/16" x 70"	28-5/16" x 70"
Series 550 Wide Stile (WS200 Top, WS195 Bottom Rail)	25-1/2" x 67-7/8"	25-1/4" x 67-7/8"	25-1/2" x 67-7/8"	25-5/16" x 67-11/16"	25-1/16" x 67-11/16"	25-5/16" x 67-11/16"

Above glass sizes are for standard top and bottom rails for surface closer and 1/2" threshold. For special height glass sizes, see formulas above.

GLASS SIZES FOR 36" X 84" OFFSET DOOR LEAVES WITH OVERHEAD CONCEALED CLOSER

DOOR STILE	1/4" (6) GLASS			1" (25) GLASS		
	BUTT HINGES OR OFFSET PIVOTS	STANDARD GEARED HINGE	VANGUARD SECURITY ASTRAGAL	BUTT HINGES OR OFFSET PIVOTS	STANDARD GEARED HINGE	VANGUARD SECURITY ASTRAGAL
Series 250 Narrow Stile (D-101 Top, WS195 Bottom Rail)	31-7/16" x 70-3/16"	31-3/16" x 70-3/16"	29-15/16" x 70-3/16"	31-1/4" x 70"	31" x 70"	31-5/16" x 70"
Series 400 Medium Stile (D-101 Top, WS195 Bottom Rail)	28-1/2" x 70-3/16"	28-1/4" x 70-3/16"	28-1/2" x 70-3/16"	28-5/16" x 70"	28-1/16" x 70"	28-5/16" x 70"
Series 550 Wide Stile (WS100 Top, WS195 Bottom Rail)	25-1/2" x 66-7/8"	25-1/4" x 66-7/8"	25-1/2" x 66-7/8"	25-5/16" x 66-11/16"	25-1/16" x 66-11/16"	25-5/16" x 66-11/16"

Above glass sizes are for standard top and bottom rails for overhead concealed closer and 1/2" threshold. For special height glass sizes, see formulas above.

CRL U.S. ALUMINUM

ENTRANCES

Glass Formulas for Custom Door Widths and Heights With A.D.A. 9-1/2" Bottom Rails

- Series 250
- Series 400
- Series 550

GLASS HEIGHT FORMULAS FOR RAIL COMBINATIONS AND CUSTOM HEIGHT DOORS

Door Opening Height - [Top Clearance + Top Rail Size + Top Glass Clearance + Bottom Clearance + Bottom Rail Size + Bottom Glass Clearance] = Glass Height

EXAMPLE 1: 84" Door Opening Height with Butt Hinges and 1/4" (6) Glass: D-201 Top Rail and WS195 Bottom Rail with 1/2" Threshold.
FORMULA: 84" - [2-15/32" + 10-9/32"] = 71-1/4" Glass Height Size.

EXAMPLE 2: 96" Door Opening Height with Butt Hinges and 1" (25) Glass: D-101 Top Rail and WS195 Bottom Rail with 1/2" Threshold.
FORMULA: 96" - [3-23/32" + 10-9/32"] = 82" Glass Height Size.

NOTE: Round Glass Calculations Up to the Nearest 1/16 Inch.

RAIL SIZES:

D-201	2-1/8"
D-101	3-3/16"
WS200	5-1/2"
WS100	6-1/2"
WS195	9-1/2"

DOOR CLEARANCES:

At Top Rail	1/8"
At Bottom Rail	11/16" @ 1/2" Threshold
1/4" (6) Glass	7/32" (Top) and 3/32" (Bottom)
1" (25) Glass	13/32" (Top) and 3/32" (Bottom)

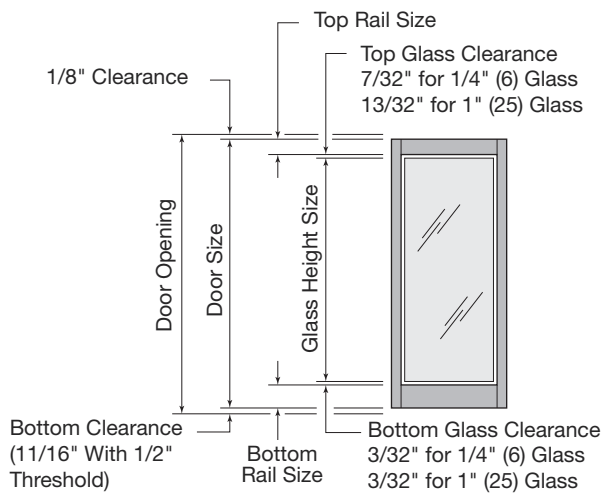

CUSTOM WIDTH DOORS WITH 9-1/2" BOTTOM RAIL FOR CENTER HUNG, BUTT HINGES, AND OFFSET PIVOTS

DOOR STILE		1/4" (6) GLASS	1" (25) GLASS
Series 250 Narrow Stile	Single Door	Door Opening Width minus 4-9/16"	Door Opening Width minus 4-3/4"
	Pair of Doors	Door Opening Width divided by 2, minus 4-9/16"	Door Opening Width divided by 2, minus 4-3/4"
Series 400 Medium Stile	Single Door	Door Opening Width minus 7-1/2"	Door Opening Width minus 7-11/16"
	Pair of Doors	Door Opening Width divided by 2, minus 7-1/2"	Door Opening Width divided by 2, minus 7-11/16"
Series 550 Wide Stile	Single Door	Door Opening Width minus 10-1/2"	Door Opening Width minus 10-11/16"
	Pair of Doors	Door Opening Width divided by 2, minus 10-1/2"	Door Opening Width divided by 2, minus 10-11/16"

CUSTOM WIDTH DOORS WITH 9-1/2" BOTTOM RAIL FOR CONTINUOUS GEARED HINGE

DOOR STILE		1/4" (6) GLASS	1" (25) GLASS
Series 250 Narrow Stile	Single Door	Door Opening Width minus 4-3/4"	Door Opening Width minus 4-15/16"
	Pair of Doors	Door Opening Width divided by 2, minus 4-3/4"	Door Opening Width divided by 2, minus 4-15/16"
Series 400 Medium Stile	Single Door	Door Opening Width minus 7-11/16"	Door Opening Width minus 7-15/16"
	Pair of Doors	Door Opening Width divided by 2, minus 7-11/16"	Door Opening Width divided by 2, minus 7-15/16"
Series 550 Wide Stile	Single Door	Door Opening Width minus 10-11/16"	Door Opening Width minus 10-15/16"
	Pair of Doors	Door Opening Width divided by 2, minus 10-11/16"	Door Opening Width divided by 2, minus 10-15/16"

CUSTOM WIDTH DOORS WITH 9-1/2" BOTTOM RAIL FOR VANGUARD SECURITY ASTRAGAL

DOOR STILE		1/4" (6) GLASS	1" (25) GLASS
Series 250 Narrow Stile	Pair of Doors	Door Opening Width divided by 2, minus 5-15/16"	Door Opening Width divided by 2, minus 6-1/8"
Series 400 Medium Stile	Pair of Doors	Door Opening Width divided by 2, minus 7-3/8"	Door Opening Width divided by 2, minus 7-9/16"
Series 550 Wide Stile	Pair of Doors	Door Opening Width divided by 2, minus 10-5/8"	Door Opening Width divided by 2, minus 10-13/16"

ENTRANCES

Center Pivot Doors for Overhead Concealed Closers

NEW STOCKING PROGRAM ON THESE BEST SELLERS!

Stock Doors
• Series 250

- Narrow Stile Aluminum Doors for Exterior and Interior Applications
- Accommodates 1/4" (6) Clear Tempered Glass (Not Included)
- Prepped for Overhead Concealed Door Closer (Not Included)
- Choice of Standard or ADA Access Bottom Rails
- Lifetime Warranty on Mechanically Fastened and Welded Corner Construction

When you need a quality door in a hurry, our new Stocking Program is the solution. U.S. Aluminum now offers a line of stock size Narrow Stile Doors for exterior and interior applications. Both Clear Anodized and Bronze Anodized finishes are available as single doors or in pairs in two versions: Center Pivot and Offset Pivot.

These Center Pivot Doors include standard 2" (51) Stiles, 2-1/8" (54) Top Rails, and your choice of standard 3-3/16" (81) Bottom Rails or 9-1/2" (241) ADA Access Bottom Rails. Other standard features include a Push Bar, Lock, Lock Indicator, Cylinder and Cylinder Guards, Glass Stops, and Glazing Gaskets. You supply the 1/4" (6) clear tempered glass.

Doors are packed for immediate shipment or pickup from all U.S. Aluminum and C.R. Laurence Service Centers. Pricing is available from U.S. Aluminum at (800) 262-5151 or at usalum.com.

- Clear Anodized and Bronze Anodized in Single or Pairs of Doors

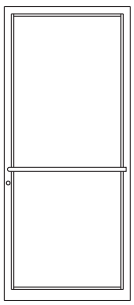

SINGLE DOOR
36" x 84"
(914 x 2134)

STANDARD FEATURES:
- Push Bars
- Hookbolt Lock (Single Doors)
- Three-Point Lock (Paired Doors)
- Lock Indicator
- Cylinders
- Cylinder Guards
- Glazing Gaskets

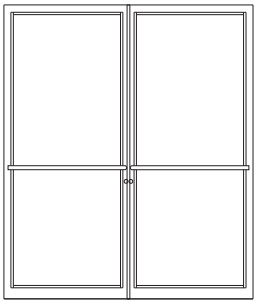

PAIRS OF DOORS
72" x 84"
(1829 x 2134)

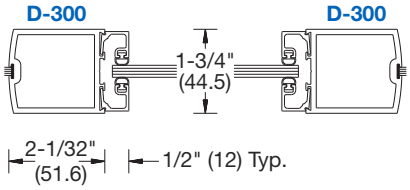

AVAILABLE OPTIONS:
- Panic Devices
- Continuous Geared Hinges
- Butt Hinges
- Vanguard Security Astragal

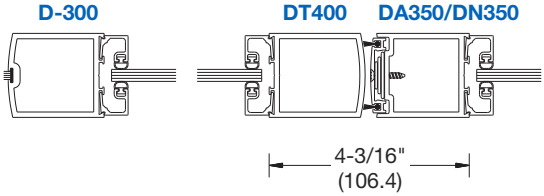

Online usalum.com By Phone (800) 262-5151 Ext. 5305
Online crlaurence.com By Phone (800) 421-6144 Ext. 5305

CRL U.S. ALUMINUM

ENTRANCES

Center Pivot Doors for Overhead Concealed Closers

VIEW OUR DOOR VIDEO ONLINE AT CRL-ARCH.COM

- Available Through All U.S. Aluminum and C.R. Laurence Service Centers

Stock Doors
• Series 250

STOCK SIZE CENTER PIVOT DOORS

- Accommodates 1/4" (6) Tempered Glass (Not Included) See Pages 10-H1 and 12-H1 for Glass Sizes

SINGLE DOOR 36" X 84" (914 X 2134) WITH 2" (51) STILES AND 2-1/8" (54) TOP RAILS (NO GLASS)

CLEAR ANODIZED PART NO.	BRONZE ANODIZED PART NO.	LATCH SIDE	BOTTOM RAIL TYPE
CD21711R036	CD21722R036	Right	ADA Access 9-1/2" (241)
CD21711L036	CD21722L036	Left	ADA Access 9-1/2" (241)
DC21711R036	DC21722R036	Right	Standard 3-3/16" (81)
DC21711L036	DC21722L036	Left	Standard 3-3/16" (81)

Minimum order: 1 each. Must ship common carrier or will call at our Service Centers.
*Latch side as seen from the exterior of the building.

PAIRS OF DOORS 72" X 84" (1829 X 2134) WITH 2" (51) STILES AND 2-1/8" (54) TOP RAILS (NO GLASS)

CLEAR ANODIZED PART NO.	BRONZE ANODIZED PART NO.	BOTTOM RAIL TYPE
CD227110072	CD227220072	ADA Access 9-1/2" (241)
DC227110072	DC227220072	Standard 3-3/16" (81)

Minimum order: 1 pair. Must ship common carrier or will call at our Service Centers.

ENTRANCES

Offset Pivot Doors for Surface Mounted Closers

NEW STOCKING PROGRAM ON THESE BEST SELLERS!

Stock Doors
• Series 250

- Narrow Stile Aluminum Doors for Exterior and Interior Applications
- Accommodates 1/4" (6) Clear Tempered Glass (Not Included)
- Prepped for Offset Pivots, Door Closer (Not Included)
- Choice of Standard or ADA Access Bottom Rails
- Lifetime Warranty on Mechanically Fastened and Welded Corner Construction

When you need a quality door in a hurry, our new Stocking Program is the solution. U.S. Aluminum now offers a line of stock size Narrow Stile Doors for exterior and interior applications. Both Clear Anodized and Bronze Anodized finishes are available as single doors or in pairs in two versions: Offset Pivot and Center Pivot.

These Offset Pivot Doors include standard 2" (51) Stiles, 2-1/8" (54) Top Rails, and your choice of Standard 3-3/16" (81) Bottom Rails or 9-1/2" (241) ADA Access Bottom Rails. Other standard features include a Push Bar, Offset Pull Handle, Lock, Lock Indicator, Cylinder and Cylinder Guards, Glass Stops, and Glazing Gaskets. You supply the 1/4" (6) clear tempered glass.

Doors are packed for immediate shipment or pickup from all U.S. Aluminum and C.R. Laurence Service Centers. Pricing is available from U.S. Aluminum at (800) 262-5151 or at usalum.com.

- Clear Anodized and Bronze Anodized in Single or Pairs of Doors

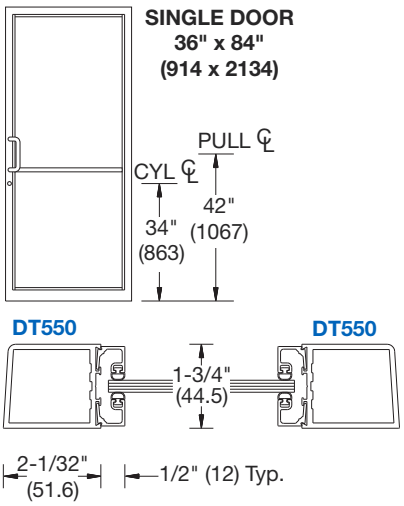

STANDARD FEATURES:
- Push Bar and Offset Pull Handle
- Hookbolt Lock (Single Doors)
- Three-Point Lock (Paired Doors)
- Lock Indicator
- Cylinders
- Cylinder Guards
- Glazing Gaskets

AVAILABLE OPTIONS:
- Panic Devices
- Continuous Geared Hinges
- Butt Hinges
- Vanguard Security Astragal

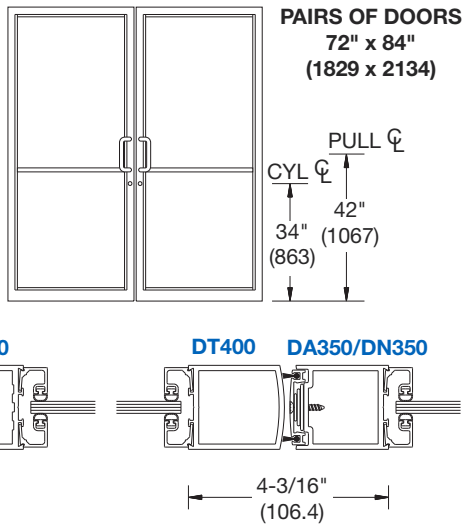

CRL U.S. ALUMINUM

ENTRANCES

Offset Pivot Doors for Surface Mounted Closers

VIEW OUR DOOR VIDEO ONLINE AT CRL-ARCH.COM

Stock Doors
• Series 250

- Available Through All U.S. Aluminum and C.R. Laurence Service Centers

STOCK SIZE OFFSET PIVOT DOORS

- Accommodates 1/4" (6) Tempered Glass (Not Included) See Pages 10-H1 and 12-H1 for Glass Sizes

SINGLE DOOR 36" X 84" (914 X 2134) WITH 2" (51) STILES AND 2-1/8" (54) TOP RAILS (NO GLASS)

CLEAR ANODIZED PART NO.	BRONZE ANODIZED PART NO.	LATCH SIDE*	BOTTOM RAIL TYPE
CD21211R036	CD21222R036	Right	ADA Access 9-1/2" (241)
CD21211L036	CD21222L036	Left	ADA Access 9-1/2" (241)
DC21211R036	DC21222R036	Right	Standard 3-3/16" (81)
DC21211L036	DC21222L036	Left	Standard 3-3/16" (81)

Minimum order: 1 each. Must ship common carrier or will call at our Service Centers.
*Latch side as seen from the exterior of the building.

PAIRS OF DOORS 72" X 84" (1829 X 2134) WITH 2" (51) STILES AND 2-1/8" (54) TOP RAILS (NO GLASS)

CLEAR ANODIZED PART NO.	BRONZE ANODIZED PART NO.	BOTTOM RAIL TYPE
CD222110072	CD222220072	ADA Access 9-1/2" (241)
DC222110072	DC222220072	Standard 3-3/16" (81)

Minimum order: 1 each. Must ship common carrier or will call at our Service Centers.

ENTRANCES

Stock Up/Over Frames for Center Pivot Applications

- Available Through All U.S. Aluminum and C.R. Laurence Service Centers

- Series 250
- Series 400
- Series 550

SERIES 400 SINGLE DOOR FRAME - 1-3/4" X 4" (44.5 X 101.6)

UP/OVER FRAME FOR SINGLE DOOR	OPEN BACK PART NO.	TUBULAR PART NO.	FINISH
39-1/2" x 85-3/4"	0B1171136	FR1171136	Clear Anodized
	0B1172236	FR1172236	Bronze Anodized

Minimum order: 1 each.

SERIES 400 DOUBLE DOOR FRAME - 1-3/4" X 4" (44.5 X 101.6)

UP/OVER FRAME FOR PAIRS	OPEN BACK PART NO.	TUBULAR PART NO.	FINISH
75-1/2" x 85-3/4"	0A1271172	FA1271172	Clear Anodized
	0A1272272	FA1272272	Bronze Anodized

Minimum order: 1 each.

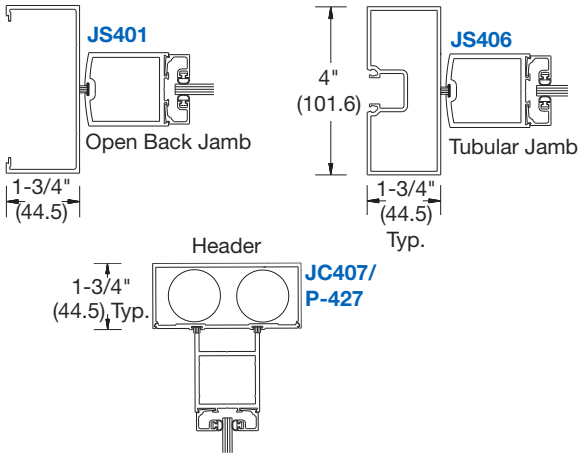

SERIES 450 SINGLE DOOR FRAME - 1-3/4" X 4-1/2" (44.5 X 114.3)

UP/OVER FRAME FOR SINGLE DOOR	OPEN BACK PART NO.	TUBULAR PART NO.	FINISH
39-1/2" x 85-3/4"	0B4171136	FR4171136	Clear Anodized
	0B4172236	FR4172236	Bronze Anodized

Minimum order: 1 each.

SERIES 450 DOUBLE DOOR FRAME - 1-3/4" X 4-1/2" (44.5 X 114.3)

UP/OVER FRAME FOR PAIRS	OPEN BACK PART NO.	TUBULAR PART NO.	FINISH
75-1/2" x 85-3/4"	0A4271172	FA4271172	Clear Anodized
	0A4272272	FA4272272	Bronze Anodized

Minimum order: 1 each.

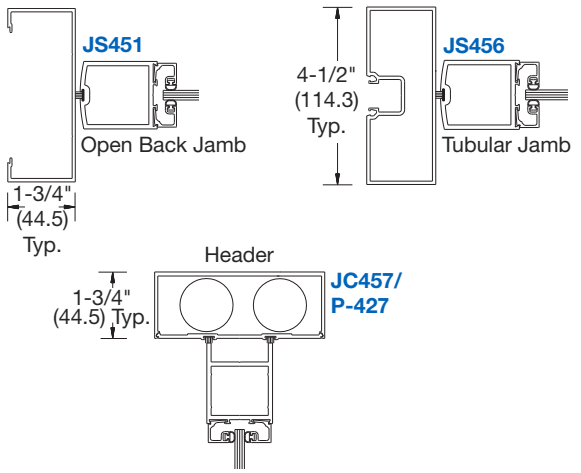

SERIES 451 SINGLE DOOR FRAME - 2" X 4-1/2" (50.8 X 114.3)

UP/OVER FRAME FOR SINGLE DOOR	OPEN BACK PART NO.	TUBULAR PART NO.	FINISH
40" x 86"	0B7171136	FR7171136	Clear Anodized
	0B7172236	FR7172236	Bronze Anodized

Minimum order: 1 each.

SERIES 451 DOUBLE DOOR FRAME - 2" X 4-1/2" (50.8 X 114.3)

UP/OVER FRAME FOR PAIRS	OPEN BACK PART NO.	TUBULAR PART NO.	FINISH
76" x 86"	0A7271172	FA7271172	Clear Anodized
	0A7272272	FA7272272	Bronze Anodized

Minimum order: 1 each.

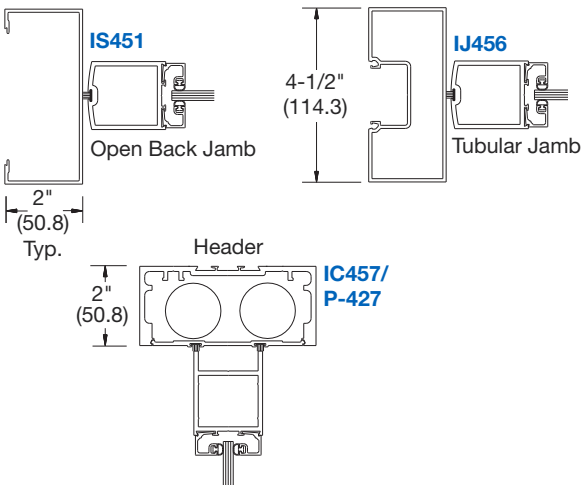

NOTE: Frame packages include TH400 Threshold. Visit usalum.com for additional information.

Stock Transom Frames for Center Pivot Applications

- Series 250
- Series 400
- Series 550

SERIES 400 SINGLE DOOR FRAME - 1-3/4" X 4" (44.5 X 101.6)

TRANSOM FRAME FOR SINGLE DOOR	OPEN BACK PART NO.	TUBULAR PART NO.	FINISH
39-1/2" x 126"	0B3171136	FR3171136	Clear Anodized
	0B3172236	FR3172236	Bronze Anodized

Minimum order: 1 each.

SERIES 400 DOUBLE DOOR FRAME - 1-3/4" X 4" (44.5 X 101.6)

TRANSOM FRAME FOR PAIRS	OPEN BACK PART NO.	TUBULAR PART NO.	FINISH
75-1/2" x 126"	0A3271172	FA3271172	Clear Anodized
	0A3272272	FA3272272	Bronze Anodized

Minimum order: 1 each.

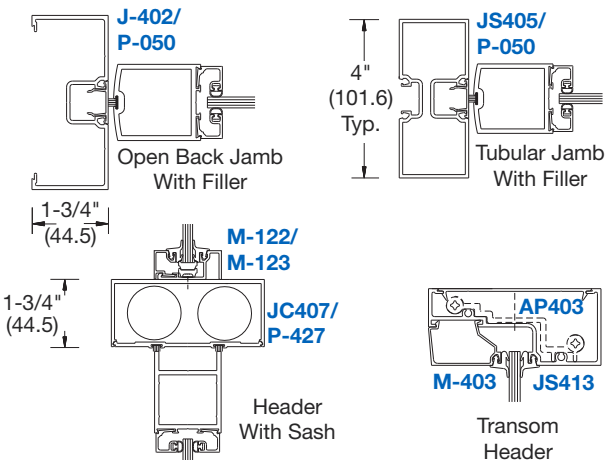

SERIES 450 SINGLE DOOR FRAME - 1-3/4" X 4-1/2" (44.5 X 114.3)

TRANSOM FRAME FOR SINGLE DOOR	OPEN BACK PART NO.	TUBULAR PART NO.	FINISH
39-1/2" x 126"	0B6171136	FR6171136	Clear Anodized
	0B6172236	FR6172236	Bronze Anodized

Minimum order: 1 each.

SERIES 450 DOUBLE DOOR FRAME - 1-3/4" X 4-1/2" (44.5 X 114.3)

TRANSOM FRAME FOR PAIRS	OPEN BACK PART NO.	TUBULAR PART NO.	FINISH
75-1/2" x 126"	0A6271172	FA6271172	Clear Anodized
	0A6272272	FA6272272	Bronze Anodized

Minimum order: 1 each.

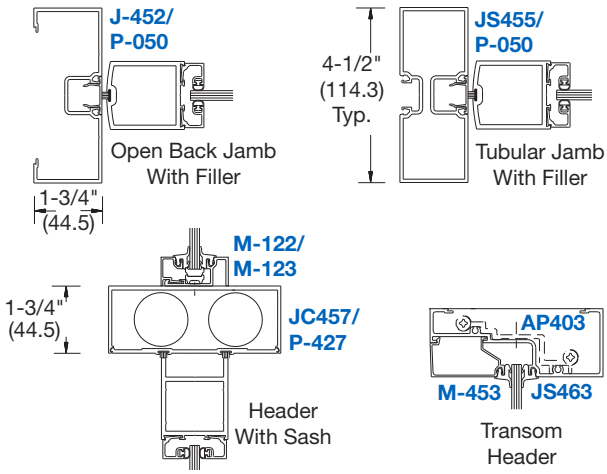

SERIES 451 SINGLE DOOR FRAME - 2" X 4-1/2" (50.8 X 114.3)

TRANSOM FRAME FOR SINGLE DOOR	OPEN BACK PART NO.	TUBULAR PART NO.	FINISH
40" x 126"	0B9171136	FR9171136	Clear Anodized
	0B9172236	FR9172236	Bronze Anodized

Minimum order: 1 each.

SERIES 451 DOUBLE DOOR FRAME - 2" X 4-1/2" (50.8 X 114.3)

TRANSOM FRAME FOR PAIRS	OPEN BACK PART NO.	TUBULAR PART NO.	FINISH
76" x 126"	0A9271172	FA9271172	Clear Anodized
	0A9272272	FA9272272	Bronze Anodized

Minimum order: 1 each.

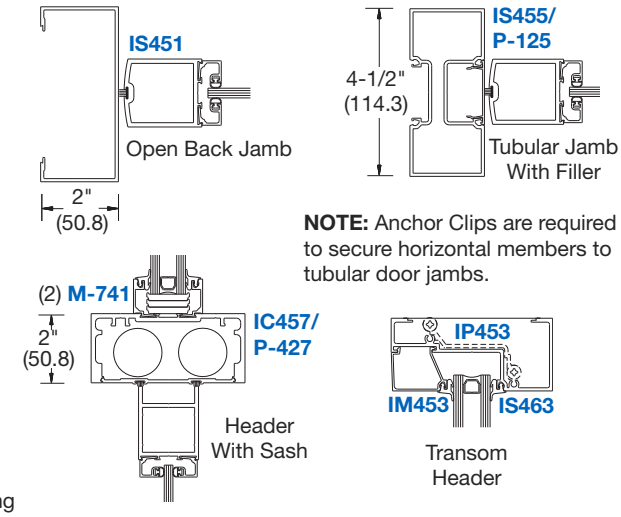

NOTE: Anchor Clips are required to secure horizontal members to tubular door jambs.

NOTE: Frame packages include TH400 Threshold and transom sash with glazing gaskets for transom frames. Visit usalum.com for additional information.

ENTRANCES

Stock Up/Over Frames for Offset Pivot Applications

- Available Through All U.S. Aluminum and C.R. Laurence Service Centers

- Series 250
- Series 400
- Series 550

SERIES 400 SINGLE DOOR FRAME - 1-3/4" X 4" (44.5 X 101.6)

UP/OVER FRAME FOR SINGLE DOOR	OPEN BACK PART NO.	TUBULAR PART NO.	HAND	FINISH
39-1/2" x 85-3/4"	0B11211L36	FR11211L36	Left	Clear Anodized
	0B11211R36	FR11211R36	Right	Clear Anodized
	0B11222L36	FR11222L36	Left	Bronze Anodized
	0B11222R36	FR11222R36	Right	Bronze Anodized

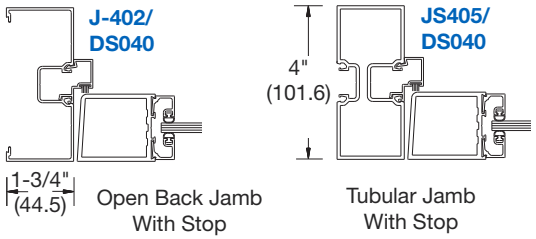

SERIES 400 DOUBLE DOOR FRAME - 1-3/4" X 4" (44.5 X 101.6)

UP/OVER FRAME FOR PAIRS	OPEN BACK PART NO.	TUBULAR PART NO.	FINISH
75-1/2" x 85-3/4"	0A1221172	FA1221172	Clear Anodized
	0A1222272	FA1222272	Bronze Anodized

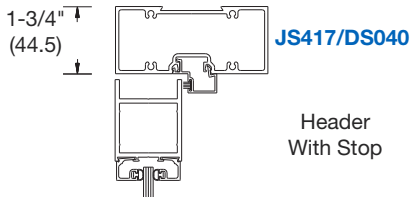

SERIES 450 SINGLE DOOR FRAME - 1-3/4" X 4-1/2" (44.5 X 114.3)

UP/OVER FRAME FOR SINGLE DOOR	OPEN BACK PART NO.	TUBULAR PART NO.	HAND	FINISH
39-1/2" x 85-3/4"	0B41211L36	FR41211L36	Left	Clear Anodized
	0B41211R36	FR41211R36	Right	Clear Anodized
	0B41222L36	FR41222L36	Left	Bronze Anodized
	0B41222R36	FR41222R36	Right	Bronze Anodized

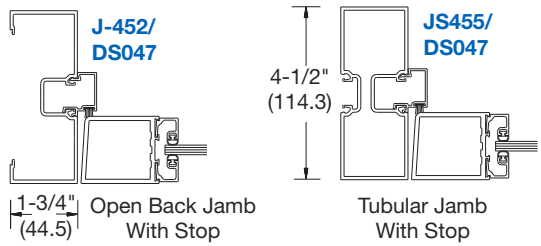

SERIES 450 DOUBLE DOOR FRAME - 1-3/4" X 4-1/2" (44.5 X 114.3)

UP/OVER FRAME FOR PAIRS	OPEN BACK PART NO.	TUBULAR PART NO.	FINISH
75-1/2" x 85-3/4"	0A4221172	FA4221172	Clear Anodized
	0A4222272	FA4222272	Bronze Anodized

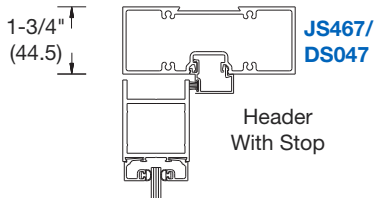

SERIES 451 SINGLE DOOR FRAME - 2" X 4-1/2" (50.8 X 114.3)

UP/OVER FRAME FOR SINGLE DOOR	OPEN BACK PART NO.	TUBULAR PART NO.	HAND	FINISH
40" x 86"	0B71211L36	FR71211L36	Left	Clear Anodized
	0B71211R36	FR71211R36	Right	Clear Anodized
	0B71222L36	FR71222L36	Left	Bronze Anodized
	0B71222R36	FR71222R36	Right	Bronze Anodized

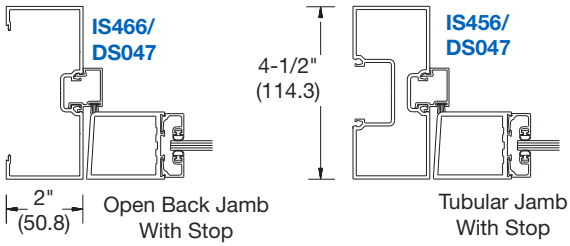

SERIES 451 DOUBLE DOOR FRAME - 2" X 4-1/2" (50.8 X 114.3)

UP/OVER FRAME FOR PAIRS	OPEN BACK PART NO.	TUBULAR PART NO.	FINISH
76" x 86"	0A7221172	FA7221172	Clear Anodized
	0A7222272	FA7222272	Bronze Anodized

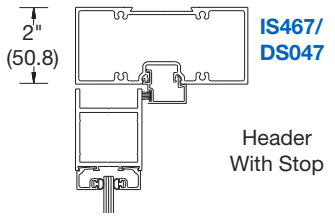

NOTE: Frame packages include TH250 Threshold and transom sash with glazing gaskets for transom frames.
Visit usalum.com for additional information.

Stock Transom Frames for Offset Pivot Applications

- Series 250
- Series 400
- Series 550

SERIES 400 SINGLE DOOR FRAME - 1-3/4" X 4" (44.5 X 101.6)

TRANSOM FRAME FOR SINGLE DOOR	OPEN BACK PART NO.	TUBULAR PART NO.	HAND	FINISH
39-1/2" x 126"	0B31211L36	FR31211L36	Left	Clear Anodized
	0B31211R36	FR31211R36	Right	Clear Anodized
	0B31222L36	FR31222L36	Left	Bronze Anodized
	0B31222R36	FR31222R36	Right	Bronze Anodized

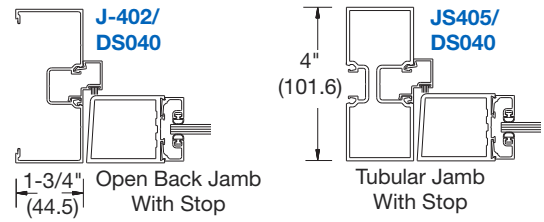

SERIES 400 DOUBLE DOOR FRAME - 1-3/4" X 4" (44.5 X 101.6)

TRANSOM FRAME FOR PAIRS	OPEN BACK PART NO.	TUBULAR PART NO.	FINISH
75-1/2" x 126"	0A3221172	FA3221172	Clear Anodized
	0A3222272	FA3222272	Bronze Anodized

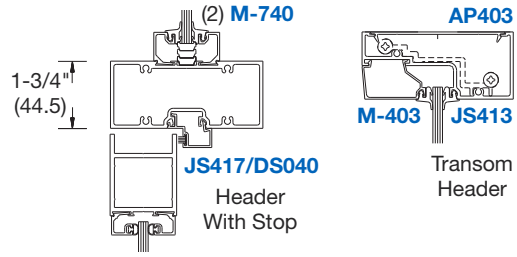

SERIES 450 SINGLE DOOR FRAME - 1-3/4" X 4-1/2" (44.5 X 114.3)

TRANSOM FRAME FOR SINGLE DOOR	OPEN BACK PART NO.	TUBULAR PART NO.	HAND	FINISH
39-1/2" x 126"	0B61211L36	FR61211L36	Left	Clear Anodized
	0B61211R36	FR61211R36	Right	Clear Anodized
	0B61222L36	FR61222L36	Left	Bronze Anodized
	0B61222R36	FR61222R36	Right	Bronze Anodized

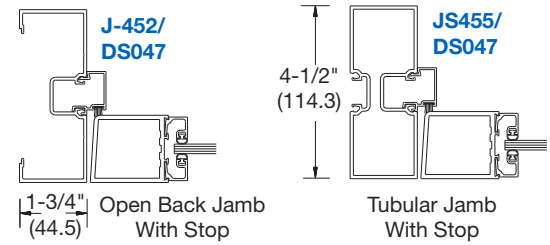

SERIES 450 DOUBLE DOOR FRAME - 1-3/4" X 4-1/2" (44.5 X 114.3)

TRANSOM FRAME FOR PAIRS	OPEN BACK PART NO.	TUBULAR PART NO.	FINISH
75-1/2" x 126"	0A6221172	FA6221172	Clear Anodized
	0A6222272	FA6222272	Bronze Anodized

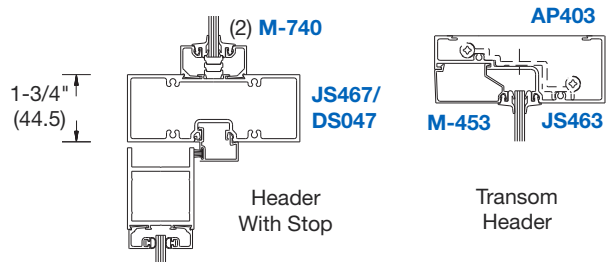

SERIES 451 SINGLE DOOR FRAME - 2" X 4-1/2" (50.8 X 114.3)

TRANSOM FRAME FOR SINGLE DOOR	OPEN BACK PART NO.	TUBULAR PART NO.	HAND	FINISH
40" x 126"	0B91211L36	FR91211L36	Left	Clear Anodized
	0B91211R36	FR91211R36	Right	Clear Anodized
	0B91222L36	FR91222L36	Left	Bronze Anodized
	0B91222R36	FR91222R36	Right	Bronze Anodized

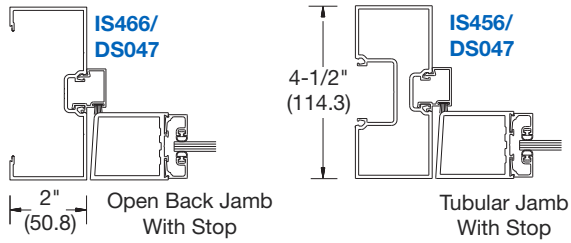

SERIES 451 DOUBLE DOOR FRAME - 2" X 4-1/2" (50.8 X 114.3)

TRANSOM FRAME FOR PAIRS	OPEN BACK PART NO.	TUBULAR PART NO.	FINISH
76" x 126"	0A9221172	FA9221172	Clear Anodized
	0A9222272	FA9222272	Bronze Anodized

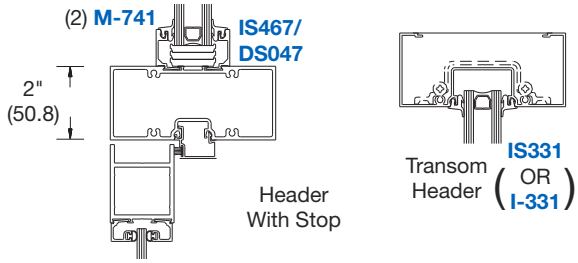

NOTE: Frame packages include TH250 Threshold and transom sash with glazing gaskets for transom frames.
Visit usalum.com for additional information.

ENTRANCES

Prepared Door Headers and Thresholds for Stock Center Pivot Doors

- Series 250
- Series 400
- Series 550

NEW STOCKING PROGRAM ON THESE BEST SELLERS!

- Available Through All U.S. Aluminum and C.R. Laurence Service Centers

FABRICATED DOOR HEADERS FOR STOCK CENTER PIVOT DOORS WITH OVERHEAD CONCEALED CLOSERS

Single and Double Door Headers are fabricated to hold our Overhead Concealed Door Closers. Headers are carried in three stock sizes, and custom sizes can be special ordered. Headers are supplied with Snap-In Cover Plates with weatherstripping. For Door Closers see pages 04-H9 and 05-H9.

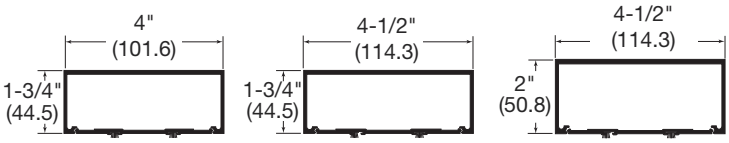

SERIES 400 - 1-3/4" X 4" (44.5 X 101.6) HEADER

36" (914) SINGLE DOOR HEADER PART NO.	72" (1829) DOUBLE DOORS HEADER PART NO.	72" (1829) DOUBLE DOORS 3 PT. LOCK HEADER PART NO.	FINISH
HB117110036	HB127110072	HB127110A72	Clear Anodized
HB117220036	HB127220072	HB127220A72	Bronze Anodized

Minimum order: 1 each.

SERIES 450 - 1-3/4" X 4-1/2" (44.5 X 114.3) HEADER

36" (914) SINGLE DOOR HEADER PART NO.	72" (1829) DOUBLE DOORS HEADER PART NO.	72" (1829) DOUBLE DOORS 3 PT. LOCK HEADER PART NO.	FINISH
HB217110036	HB227110072	HB227110A72	Clear Anodized
HB217110036	HB227220072	HB227220A72	Bronze Anodized

Minimum order: 1 each.

SERIES 451 - 2" X 4-1/2" (50.8 X 114.3) HEADER

36" (914) SINGLE DOOR HEADER PART NO.	72" (1829) DOUBLE DOORS HEADER PART NO.	72" (1829) DOUBLE DOORS 3 PT. LOCK HEADER PART NO.	FINISH
HB317110036	HB327110072	HB327110A72	Clear Anodized
HB317220036	HB327220072	HB327220A72	Bronze Anodized

Minimum order: 1 each.

FABRICATED 4" (101.6) THRESHOLD FOR CENTER PIVOT DOOR WITH OVERHEAD CONCEALED CLOSER

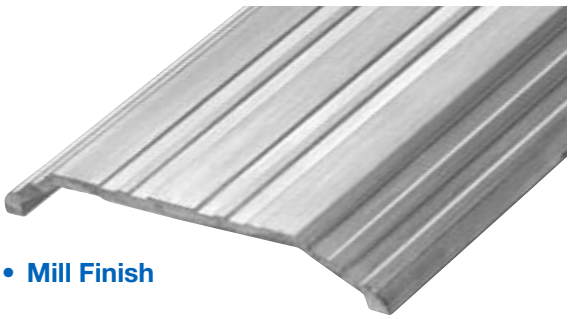

- Mill Finish

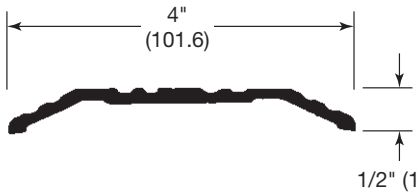

4" (101.6) THRESHOLD PREPARED FOR CENTER PIVOT DOORS

36" (914) SINGLE DOOR THRESHOLD PART NO.	72" (1829) DOUBLE DOORS THRESHOLD PART NO.	72" (1829) DOUBLE DOORS 3 PT. LOCK THRESHOLD PART NO.
TP417990036	TP427990072	TP427990A72

Minimum order: 1 each.

Prepared Door Headers and Thresholds for Stock Offset Pivot Doors

NEW STOCKING PROGRAM ON THESE BEST SELLERS!

- Series 250
- Series 400
- Series 550

- Available Through All U.S. Aluminum and C.R. Laurence Service Centers

FABRICATED DOOR HEADERS FOR STOCK OFFSET PIVOT DOORS WITH SURFACE MOUNTED CLOSERS

Single and Double Door Headers are fabricated with door stops to work with our stock offset pivot doors. Headers are carried in three stock sizes, and custom sizes can be special ordered. Headers are supplied with Snap-In Door Stops. For Surface Mounted Door Closers see pages 02-H9 and 03-H9.

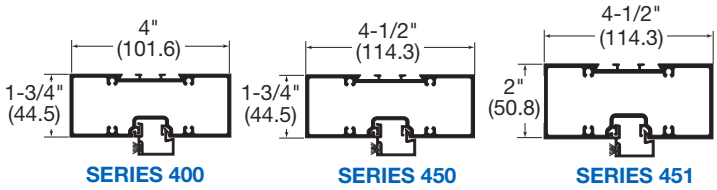

SERIES 400 - 1-3/4" X 4" (44.5 X 101.6) HEADER

36" (914) SINGLE DOOR HEADER PART NO.*	72" (1829) DOUBLE DOORS HEADER PART NO.	72" (1829) DOUBLE DOORS 3 PT. LOCK HEADER PART NO.	FINISH
HB11211L036 HB11211R036	HB122110072	HB122110A72	Clear Anodized
HB11222L036 HB11222R036	HB122220072	HB122220A72	Bronze Anodized

Minimum order: 1 each. *Must specify right or left hand.

SERIES 450 - 1-3/4" X 4-1/2" (44.5 X 114.3) HEADER

36" (914) SINGLE DOOR HEADER PART NO.*	72" (1829) DOUBLE DOORS HEADER PART NO.	72" (1829) DOUBLE DOORS 3 PT. LOCK HEADER PART NO.	FINISH
HB21211L036 HB21211R036	HB222110072	HB222110A72	Clear Anodized
HB21222L036 HB21222R036	HB222220072	HB222220A72	Bronze Anodized

Minimum order: 1 each. *Must specify right or left hand.

SERIES 451 - 2" X 4-1/2" (50.8 X 114.3) HEADER

36" (914) SINGLE DOOR HEADER PART NO.*	72" (1829) DOUBLE DOORS HEADER PART NO.	72" (1829) DOUBLE DOORS 3 PT. LOCK HEADER PART NO.	FINISH
HB31211L036 HB31211R036	HB322110072	HB322110A72	Clear Anodized
HB31222L036 HB31222R036	HB322220072	HB322220A72	Bronze Anodized

Minimum order: 1 each. *Must specify right or left hand.

FABRICATED 4-3/4" (120.7) THRESHOLD FOR OFFSET PIVOT DOOR WITH SURFACE MOUNTED CLOSER

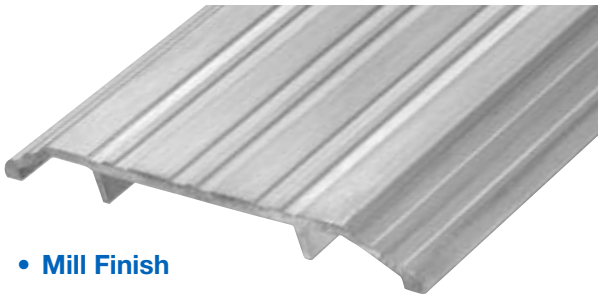

- Mill Finish

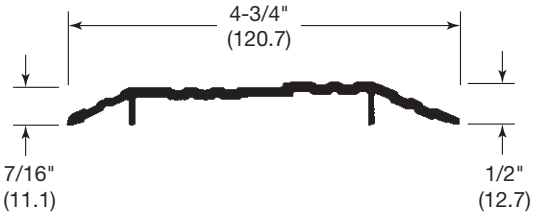

4-3/4" (120.7) THRESHOLD PREPARED FOR OFFSET PIVOT DOORS

36" (914) SINGLE DOOR THRESHOLD PART NO.*	72" (1829) DOUBLE DOORS THRESHOLD PART NO.	72" (1829) DOUBLE DOORS 3 PT. LOCK THRESHOLD PART NO.
TP21299L036 TP21299R036	TP222990072	TP222990A72

Minimum order: 1 each. *Must specify right or left hand.

ENTRANCES

Accessories

Vanguard Security Astragal

- **For Pairs of Doors With Panic Hardware**
- **Prevents Illegal Access to Buildings**
- **Factory Installed**
- **Patent No. 3,959,957**

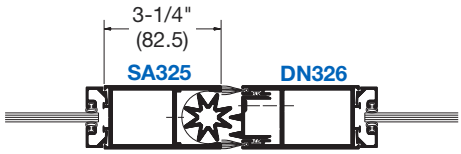

Vanguard meeting stiles for:
Series 250 Narrow Stile*
Series 400 Medium Stile
Series 800 Durafront

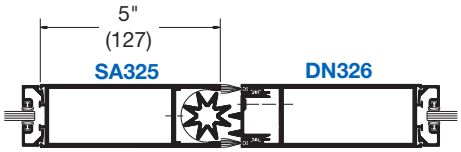

Vanguard meeting stiles for:
Series 550 Wide Stile
Series 850 Durafront

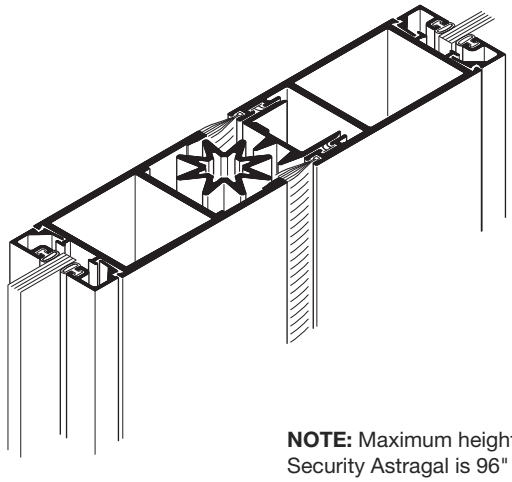

NOTE: Maximum height of Vanguard Security Astragal is 96" (2.4 m). Doors require special glass sizes.

The U.S. Aluminum Vanguard Security Astragal has a continuous rotary astragal that deters the use of a tripping device from being inserted between meeting stiles on panic doors for gaining illegal access to a building. When the panic device is in the exit only mode, access to a building through doors with Vanguard Security Astragal installed will only be possible by forced entry. The concealed Vanguard Security Astragal is a simple but effective free wheeling sprocket which engages into an adjustable rack. It is available for all U.S. Aluminum entrance doors and accommodates most standard panic devices.

***NOTE:** Vanguard meetings stiles are medium stile for Series 250 Narrow Stile doors.

Custom Designed Door Handles

- **For Aluminum, Glass or Wood Doors**
- **Round, Square or Flat Bar Stock**
- **Solid or Tubular Construction**
- **Custom Cast Designs**
- **Metal Etched Logos and Designs**
- **Bending, Mitering, and Welding**
- **Available in Brass, Bronze, Aluminum, and Stainless Steel**
- **Brushed, Polished, Etched, or Powder Coated Finishes**
- **Over 20 Standard Finishes**
- **Custom Color Matching Available**

Let us make your idea a reality! Send us your specifications and our Technical Sales Staff will design your custom handles for you. Then our Engineering Staff will supply you with a 3D rendered drawing of your design to ensure we make exactly what you want. For additional information, or to begin the design process, contact U.S. Aluminum at (800) 262-5151.

ENTRANCES

Table of Contents

Durafront Entrance Systems
- Series 800
- Series 850

SECTION H2 PAGE

SPECIFICATIONS 02-H2
TECHNICAL DATA 03-H2
TYPICAL DETAILS.....04-H2 thru 09-H2
SUBFRAMES AND GEAR HINGES 10-H2
SPECIAL FEATURES 11-H2
GLASS SIZE FORMULAS .....12-H2 and 13-H2
QUOTE/ORDER FORM .....14-H2 and 15-H2

Project: Waxahachie Civic Center, Waxahachie, TX

Due to the diversity in state/provincial, local, and federal laws and codes that govern the design and application of architectural products, it is the responsibility of the individual architect, owner, and installer to ensure that products selected for use on projects comply with all applicable building codes and laws. U.S. Aluminum exercises no control over the use or application of its products, glazing materials, and operating hardware, and assumes no responsibility thereof.

The rapidly changing technology within the architectural aluminum products industry demands that U.S. Aluminum reserve the right to revise, discontinue or change any product line, specification or electronic media without prior written notice.

NOTE: Dimensions in parentheses ( ) are millimeters unless otherwise noted.
Other metric units shown in this publication are:

m - meter	Kg - kilogram
Pa - pascal	KPa - kilopascal
MPa - megapascal	

ENTRANCES

Specifications

Durafront Entrance Systems
- Series 800
- Series 850

08 11 16 ALUMINUM DOOR AND FRAMES

SERIES	STILES	TOP RAIL	BOTTOM RAIL	GLAZING INFILL
800 Medium Stile	3-1/2" (88.9)	3-11/32" (84.9)	6-1/2" (165.1)	1/4" (6) or 1" (25)
850 Wide Stile	5" (127)	5-1/2" (139.7)	6-1/2" (165.1)	1/4" (6) or 1" (25)
A.D.A. Bottom Rail Option for Either Series			9-1/2" (241.3)	

I. GENERAL DESCRIPTION
Work Included: The glazing contractor shall furnish all necessary materials, labor, and equipment for the complete installation of aluminum entrance doors, door frames, and hardware as detailed on the drawings and specified herein.
Work Not Included: Structural support of the framing system, wood framing, structural steel, masonry, and final cleaning.

QUALITY ASSURANCE
For purposes of designating type and quality for work in this section, drawings and specifications are based on United States Aluminum Series *(Specify)* Durafront Entrance System.
Optional: Door shall have ADA 9-1/2" (241.3) bottom rail.
When substitute products are to be considered, supporting technical literature, samples and drawings must be submitted 10 days prior to bid date in order to make a valid comparison of the products involved.

II. PRODUCT MATERIALS
Door and frame members shall be extruded architectural aluminum 6063-T5 alloy and temper.
Jambs and major portions of doors shall have a minimum wall thickness of .188" (4.8). Frame sections shall be tubular members and shall provide for flush glazing of sidelites and transom areas. Applied stops shall be allowed at header bar only.
Overall dimension of frame members shall be 1-3/4" (44.5) x 4-1/2" (114.3) to accommodate 1/4" glass or 2" (50.8) x 4-1/2" (114.3) to accommodate 1" glass. Frames for offset hung doors shall feature snap-in door stops with continuous weather-stripping. Screws, nuts, washers, bolts, rivets, and other fastening devices shall be aluminum, stainless steel or other non-corrosive materials.

DOOR CONSTRUCTION
Door stiles and rails shall be tubular sections, accurately joined at corners with heavy concealed reinforcement brackets secured with bolts, screws, and then MIG welded. Doors shall have snap-in stops with E.P.D.M. glazing gasket on both sides of the glass. No exposed screws shall be permitted. Each door leaf shall be equipped with an adjusting mechanism, located in the top rail near the lock stile, which provides for minor clearance adjustments after installation. A hard-backed poly-pile weather-strip shall be installed in center hung door stiles and in lock stile of all pairs of doors. Offset pivoted or butt hung doors shall have weather-stripped door stops at frame jambs and header. The active meeting stile of all pair of doors shall have an adjustable astragal with double line of weather-stripping.
OPTIONAL: Door bottom rail will be weathered with an E.P.D.M. blade gasket sweep strip applied with concealed fasteners. (**NOTE:** This option is required for high performance conditions.)
OPTIONAL: Door bottom rail shall receive a concealed weather-stripped insert.

HARDWARE
Hardware for aluminum doors and door frames shall be the entrance manufacturer's standard. If custom hardware is to be furnished by others, templates and physical hardware must be submitted prior to any fabrication.

FINISH
All exposed framing surfaces shall be free of scratches and other serious blemishes. Aluminum extrusions shall be given a caustic etch followed by an anodic oxide treatment to obtain...
(Specify one of the following):
_____#11 Clear anodic coating
_____#22 Dark Bronze anodic coating
_____#33 Black anodic coating
A Fluoropolymer paint coating conforming with the requirements of AAMA 2605. Color shall be *(Specify a U.S. Aluminum standard color)*.

III. EXECUTION INSTALLATION
All items under this heading shall be set in their correct locations as shown in the details and shall be level, square, plumb and at proper elevation and in alignment with other work in accordance with the manufacturer's installation instructions and approved shop drawings. All joints between entrance framing and the building structure shall be sealed in order to secure a watertight installation. Upon completion of the installation of the entrances, it shall be the contractor's responsibility to make all necessary final adjustments to attain normal operation of each door and its mechanical hardware.

PROTECTION AND CLEANING
After installation, the General Contractor shall adequately protect exposed portions of the aluminum entrance work from damage by grinding and polishing compounds, plaster, lime, acid, cement, or other contaminants. The General Contractor shall be responsible for final cleaning.

ENTRANCES

Technical Data

Durafront Entrance Systems

- Series 800
- Series 850

Durafront Doors and frames are fabricated from tubular aluminum extrusions with a wall thickness of 3/16" (4.8). These extra strong, long-lasting entrance packages are ideal for locations subjected to extremely high traffic flow.

Durafront Entrance Packages, which are offered for center and offset hung doors, can be easily adapted to most U.S. Aluminum Framing Systems. The door feature mechanically fastened and welded corner construction. Offset hung doors are supplied with a pair and a half of heavy-duty hinges, or pivot sets or a continuous gear hinge. A variety of custom hardware is available upon request.

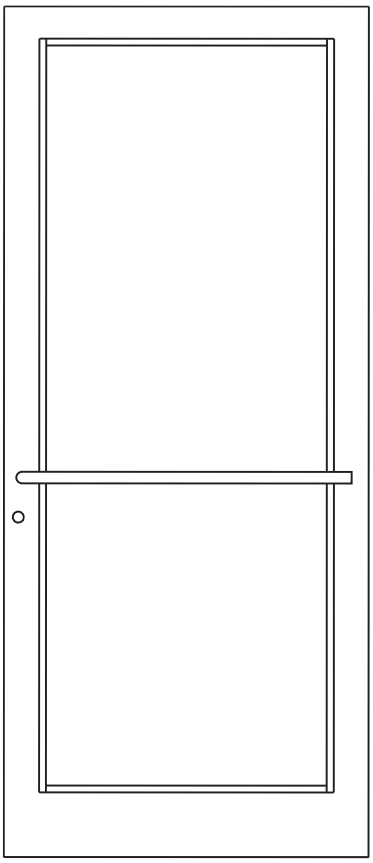

Series 800- Medium Stile
(Center Hung Door Shown)

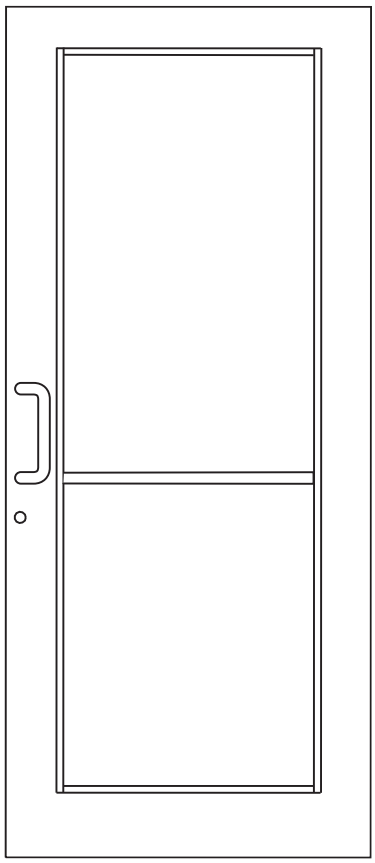

Series 850-Wide Stile
(Offset Hung Door Shown)

SERIES	STILES	TOP RAIL	BOTTOM RAIL	APPLICATIONS
800 Medium Stile	3-1/2" (88.9)	3-11/32" (84.9)	6-1/2" (165.1)	Extremely Heavy Traffic (Institutional Buildings, Schools, Sports Arenas)
850 Wide Stile	5" (127)	5-1/2" (139.7)	6-1/2" (165.1)	
A.D.A. Bottom Rail Option for Any Series			9-1/2" (241.3)	A.D.A.

ENTRANCES

Typical Details

Durafront Entrance Systems • Series 800

FOR 1/4" (6) OR 1" (25) GLAZING

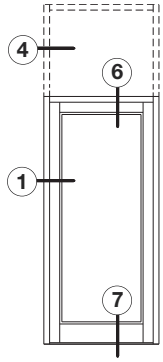

SINGLE DOOR
Shown With 1-3/4" x 4-1/2" (44.5 x 114.3) Frame

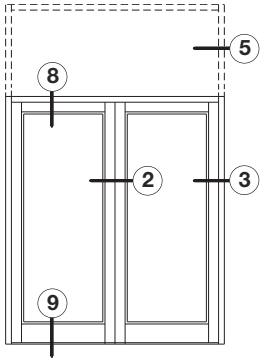

PAIR OF DOORS
Shown With 2" x 4-1/2" (50.8 x 114.3) Frame

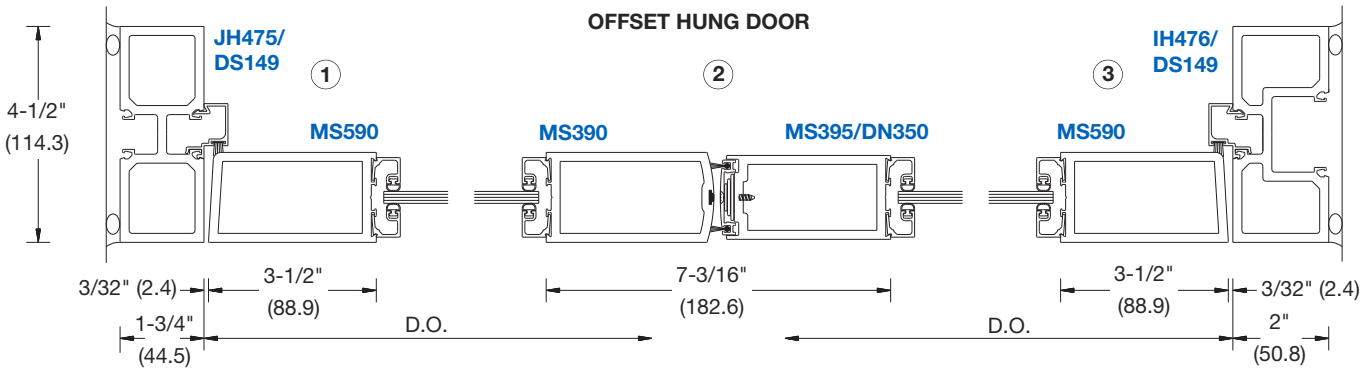

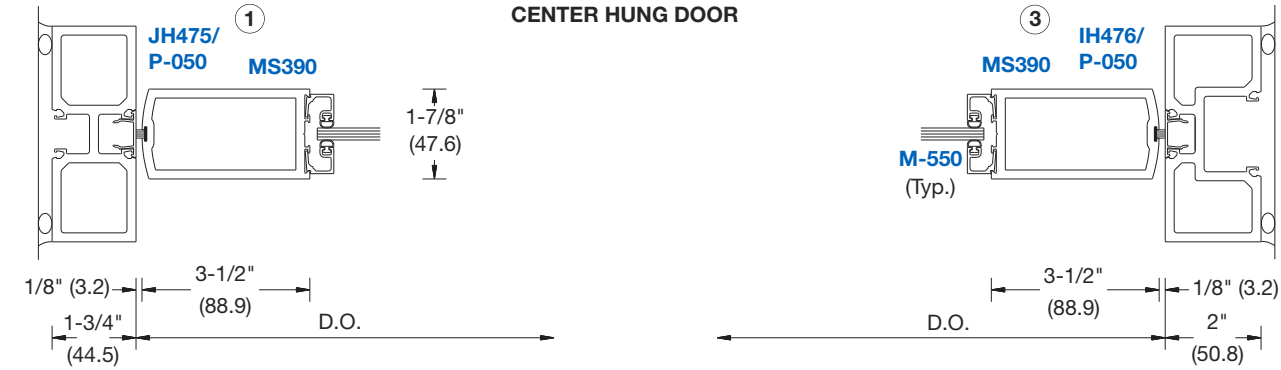

NOT TO SCALE

ENTRANCES

Typical Details

Durafront Entrance Systems • Series 800

FOR 1/4" (6) OR 1" (25) GLAZING

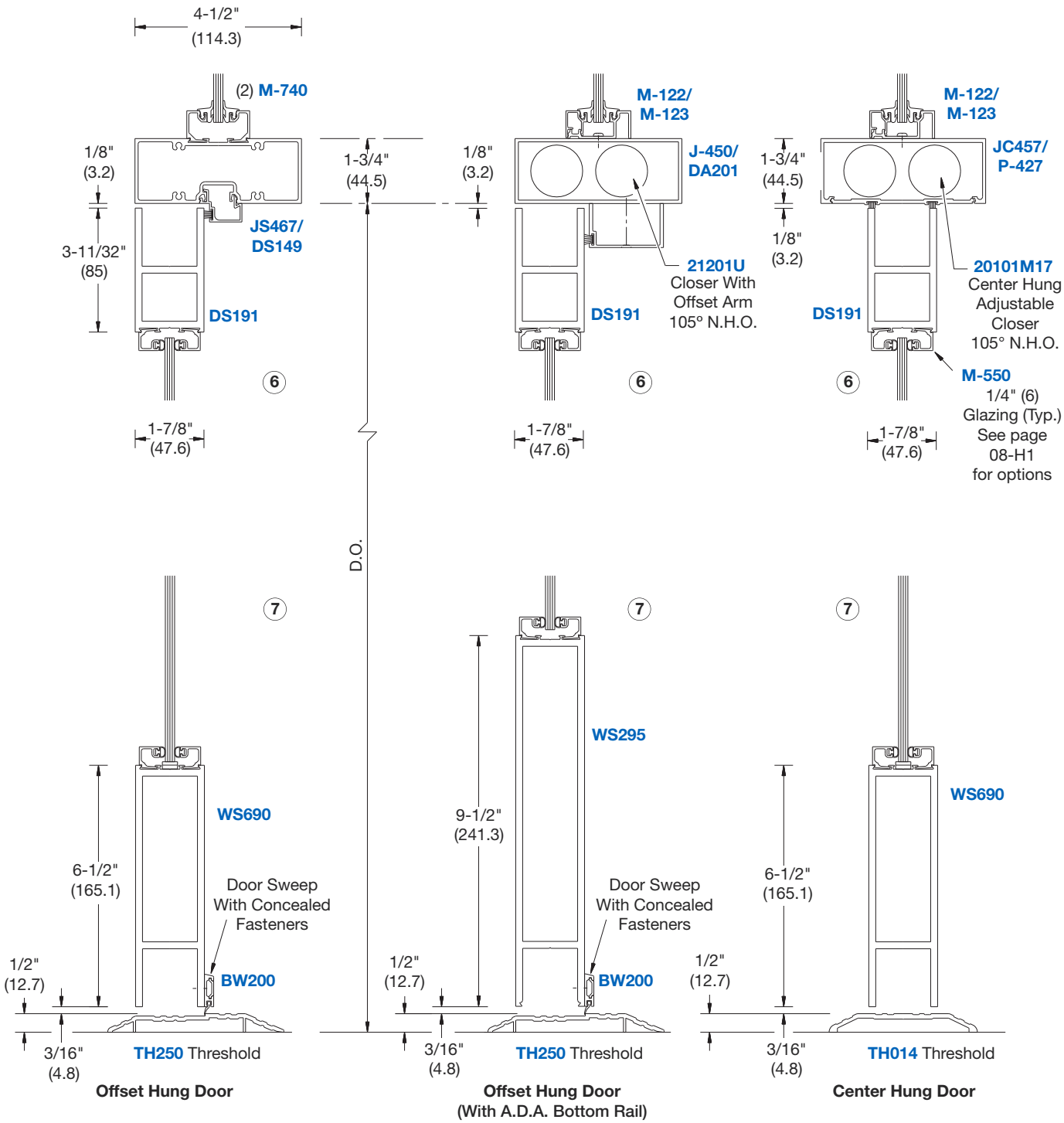

NOT TO SCALE

ENTRANCES

Typical Details

Durafront Entrance Systems • Series 800

FOR 1/4" (6) OR 1" (25) GLAZING

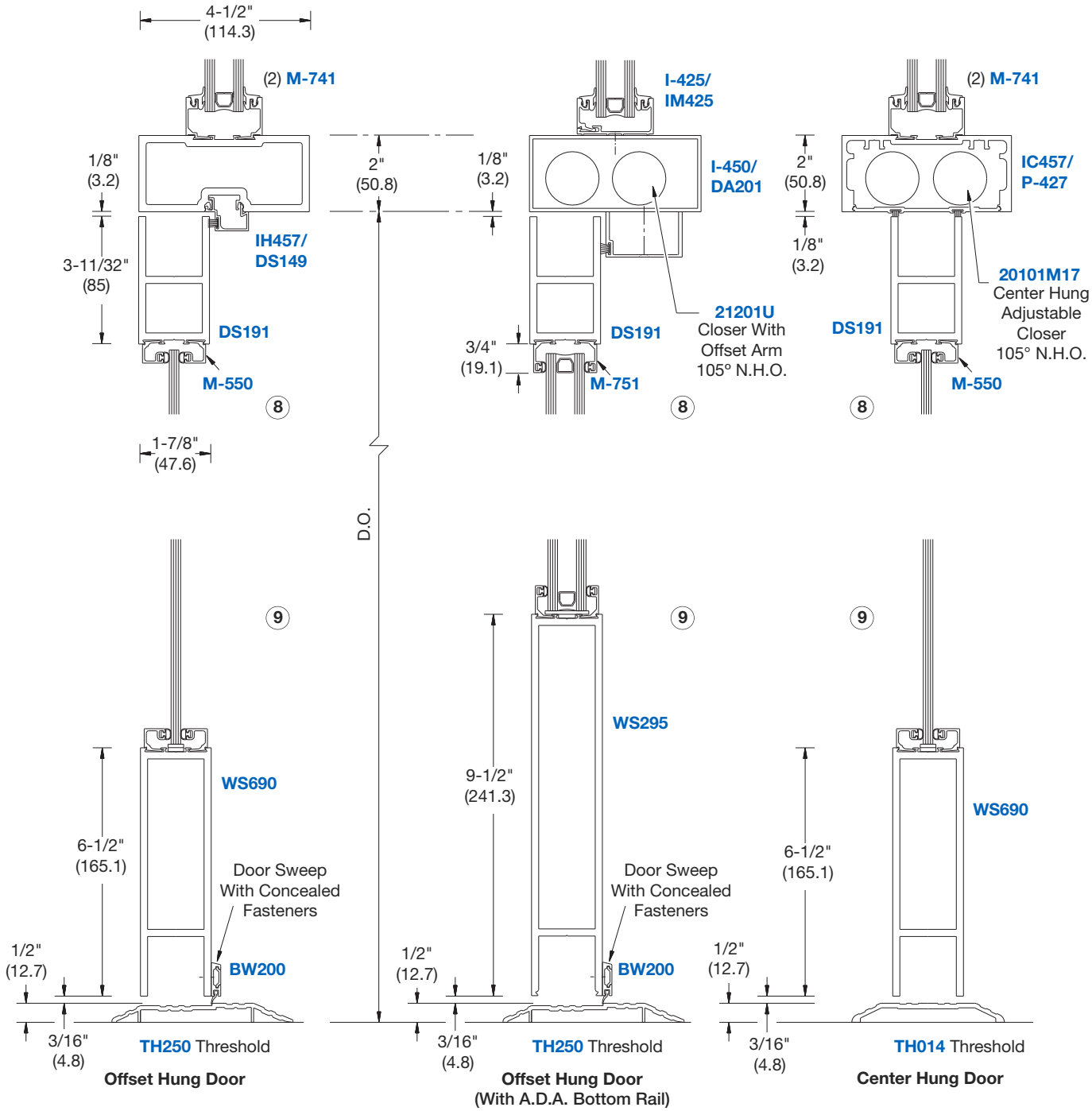

NOT TO SCALE

Typical Details

Durafront Entrance Systems • Series 850

FOR 1/4" (6) OR 1" (25) GLAZING

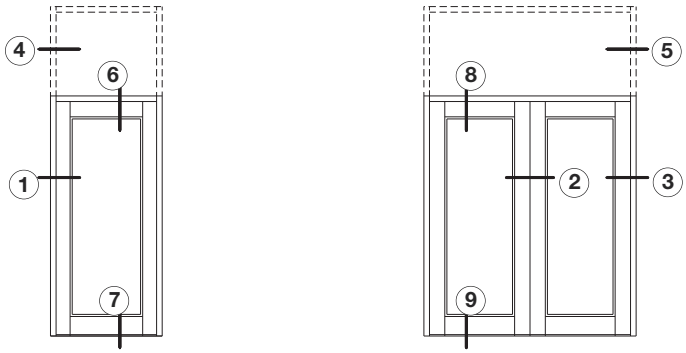

SINGLE DOOR
Shown With 1-3/4" x 4-1/2"
(445 x 1143) Frame

PAIR OF DOORS
Shown With 2" x 4-1/2"
(445 x 1143) Frame

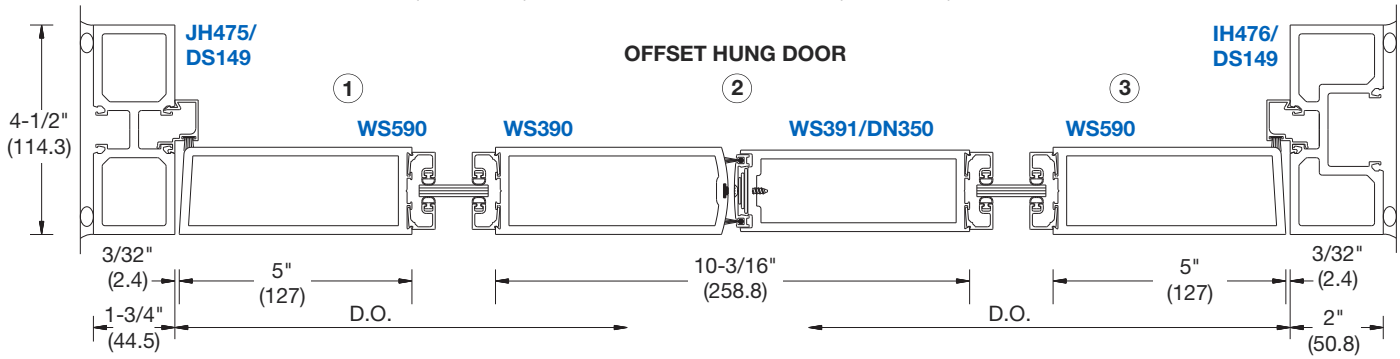

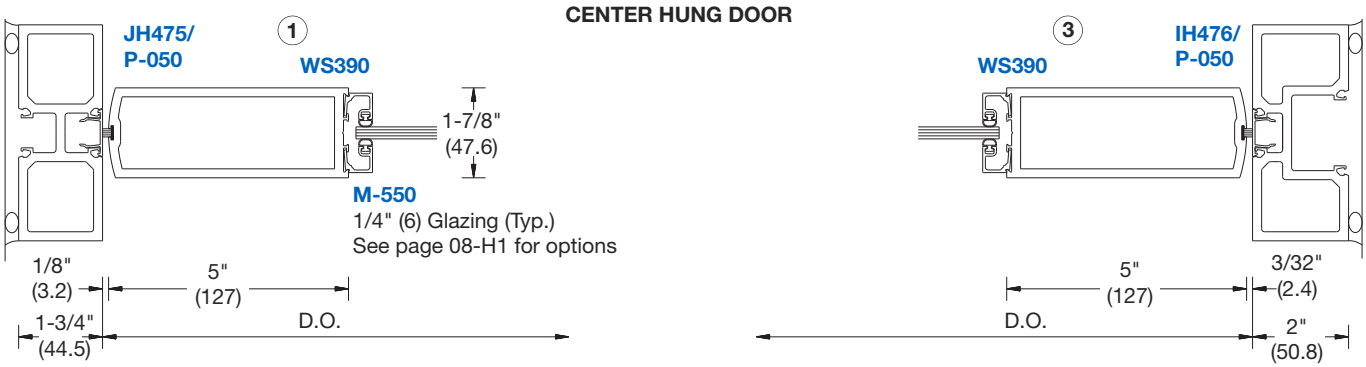

NOT TO SCALE

ENTRANCES

Typical Details

Durafront Entrance Systems • Series 850

FOR 1/4" (6) OR 1" (25) GLAZING

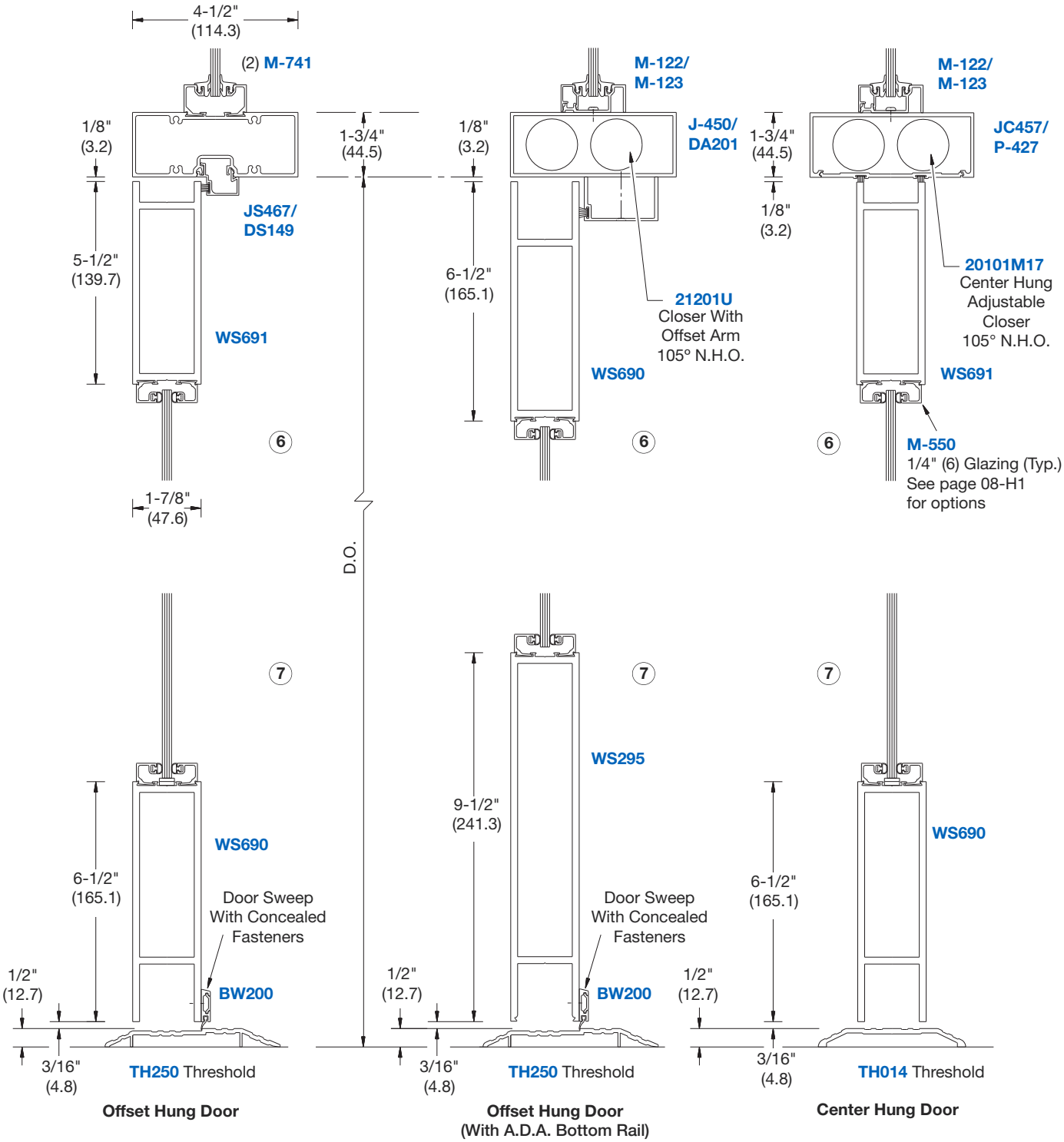

Offset Hung Door

Offset Hung Door
(With A.D.A. Bottom Rail)

Center Hung Door

NOT TO SCALE

Typical Details

Durafront Entrance Systems • Series 850

FOR 1/4" (6) OR 1" (25) GLAZING

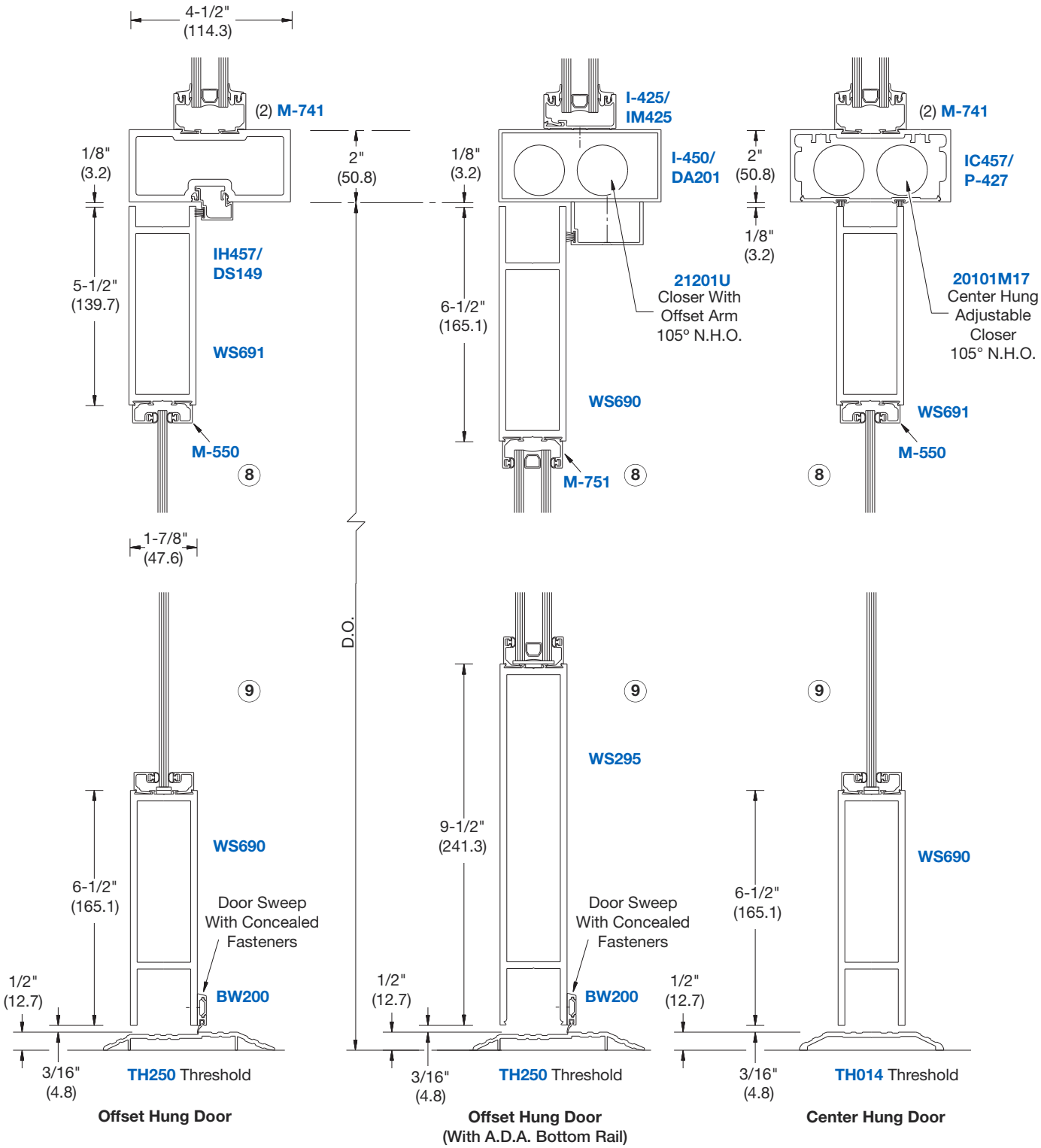

Offset Hung Door

Offset Hung Door
(With A.D.A. Bottom Rail)

Center Hung Door

NOT TO SCALE

ENTRANCES

Subframes and Gear Hinges

Durafront Entrance Systems

- Series 800
- Series 850

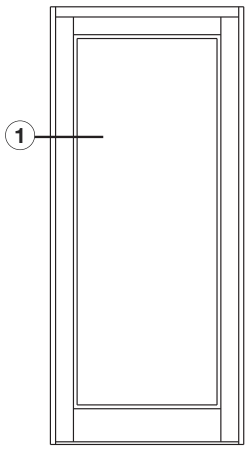

1

SERIES 800
Medium Stile

Shown With
Offset Hung Door
With 1" (25)
Subframe

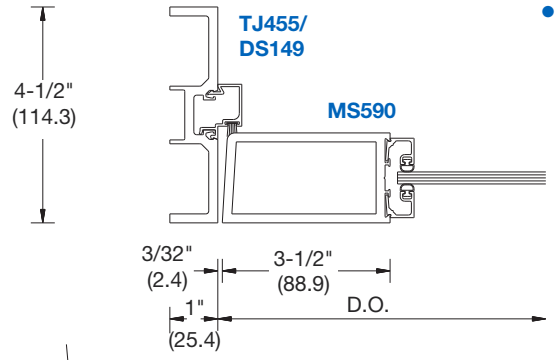

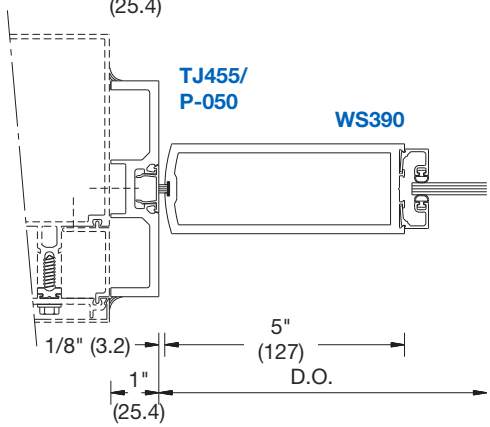

1

SERIES 850
Wide Stile

Shown With
Center Hung Door
in Curtain Wall
Application With
1" (25) Subframe

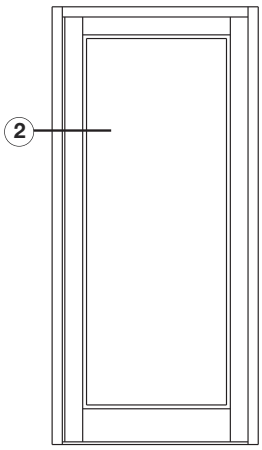

2

SERIES 800
Medium Stile

Shown With
1-3/4" x 4-1/2"
(44.5 x 114.3)
Flush Front Frame

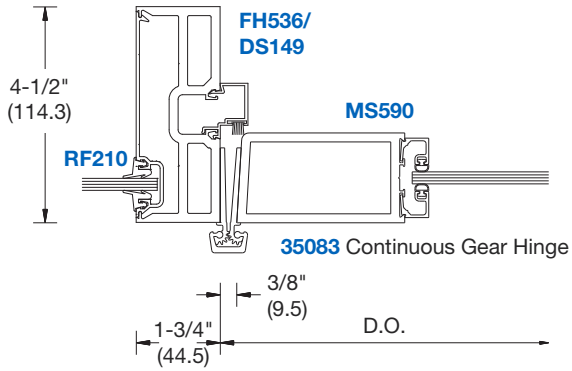

NOTE: Continuous Gear Hinge
Requires Special Clearance

2

SERIES 850
Wide Stile

Shown With
2" x 4-1/2"
(50.8 x 114.3)
Flush Front Frame

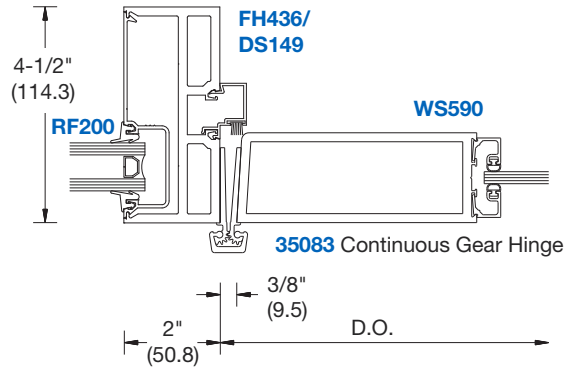

NOT TO SCALE

ENTRANCES

Special Features

Durafront Entrance Systems
- Series 800
- Series 850

Hinging Hardware for Offset Hung Doors

1. Heavy-Duty Top, Intermediate, and Bottom Pivots - Standard
2. Pair and a Half of 5" x 4-1/2" (127 x 114.3) Butt Hinges Per Leaf - Standard
3. Continuous Gear Hinges - Optional

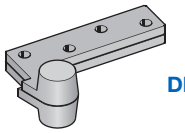

DH141

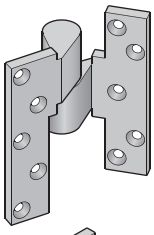

DH140

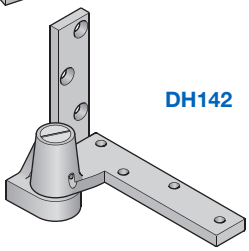

DH142

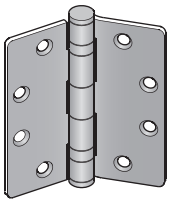

DH719

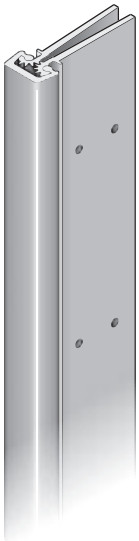

35083

Door Corner Construction

DOOR CORNERS ARE MECHANICALLY FASTENED AND WELDED

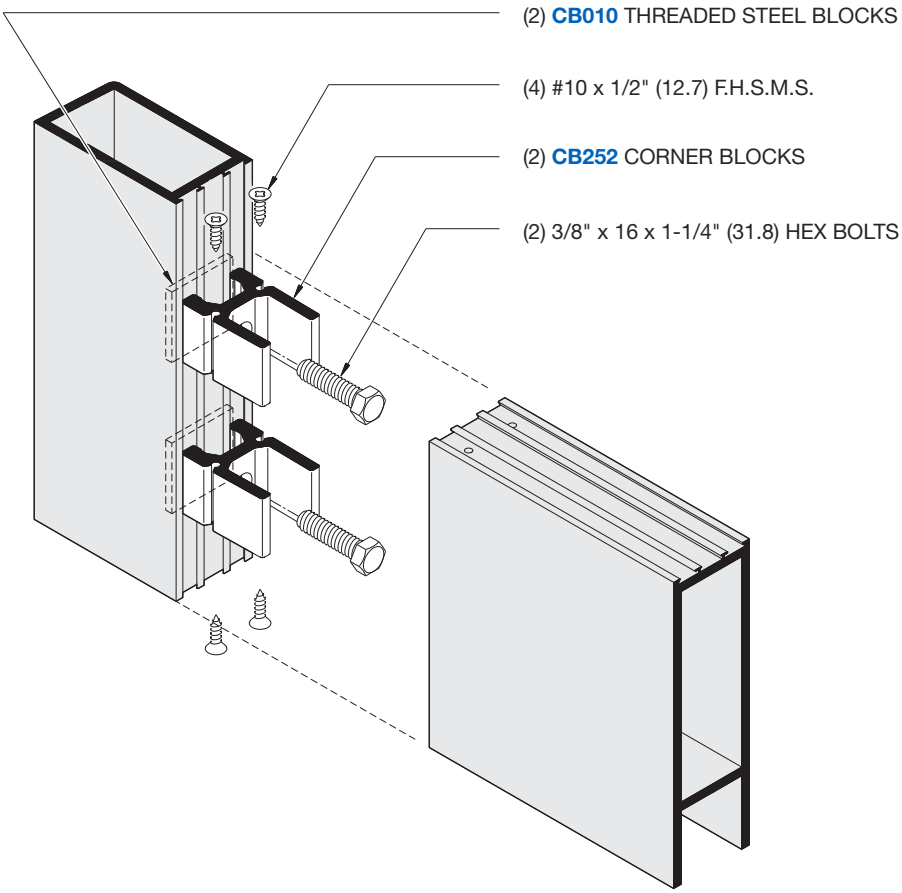

ENTRANCES

Glass Formulas for Standard Size Doors

Durafront Entrance Systems
- Series 800
- Series 850

GLASS HEIGHT FORMULAS FOR RAIL COMBINATIONS AND CUSTOM HEIGHT DOORS

Door Opening Height - [Top Clearance + Top Rail Size + Top Glass Clearance + Bottom Clearance + Bottom Rail Size + Bottom Glass Clearance] = Glass Height

EXAMPLE 1: 84" Door Opening Height with Butt Hinges and 1/4" (6) Glass: DS191 Top Rail and WS690 Bottom Rail with 1/2" Threshold.
FORMULA: 84" - [3-5/8" + 7-11/32"] = 73-1/32" (73-1/16") Glass Height Size.

EXAMPLE 2: 96" Door Opening Height with Butt Hinges and 1" (25) Glass: WS690 Top Rail and WS295 Bottom Rail with 1/2" Threshold.
FORMULA: 96" - [6-7/8" + 10-7/16"] = 78-11/16" Glass Height Size.

NOTE: Round Glass Calculations Up to the Nearest 1/16 Inch. (As Seen in Example 1 Above).

RAIL SIZES:

DS191	3-11/32"
WS691	5-1/2"
WS690	6-1/2"
WS295	9-1/2"

DOOR CLEARANCES:

At Top Rail	1/8"
At Bottom Rail	11/16" @ 1/2" Threshold
1/4" (6) Glass	7/32" (Top) and 3/32" (Bottom)
1" (25) Glass	13/32" (Top) and 3/32" (Bottom)

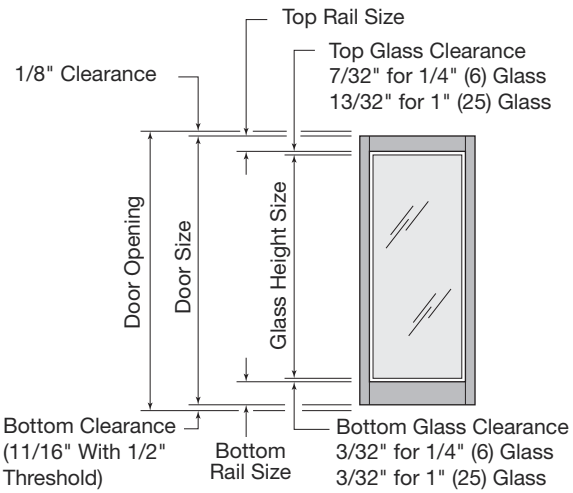

GLASS SIZES FOR STANDARD 36" X 84" CENTER HUNG DOOR LEAVES WITH OVERHEAD CONCEALED CLOSER

DOOR STILE	1/4" (6) GLASS	1" (25) GLASS
Series 800 Medium Stile (DS191 Top, WS690 Bottom Rail)	28-1/2" x 73-1/16"	28-5/16" x 72-7/8"
Series 850 Wide Stile (WS691 Top, WS690 Bottom Rail)	25-1/2" x 70-7/8"	25-5/16" x 70-11/16"

Above glass sizes are for standard top and bottom rails for overhead concealed closer and 1/2" threshold. For special height glass sizes, see formulas above.

GLASS SIZES FOR 36" X 84" OFFSET DOOR LEAVES WITH SURFACE MOUNTED CLOSER

DOOR STILE	1/4" (6) GLASS			1" (25) GLASS		
	BUTT HINGES OR OFFSET PIVOTS	STANDARD GEARED HINGE	VANGUARD SECURITY ASTRAGAL	BUTT HINGES OR OFFSET PIVOT	STANDARD GEARED HINGE	VANGUARD SECURITY ASTRAGAL
Series 800 Medium Stile (DS191 Top, WS690 Bottom Rail)	28-1/2" x 73-1/16"	28-5/16" x 73-1/16"	28-5/8" x 73-1/16"	28-5/16" x 72-7/8"	28-1/8" x 72-7/8"	28-7/16" x 72-7/8"
Series 850 Wide (WS691 Top, WS690 Bottom Rail)	25-1/2" x 70-7/8"	25-5/16" x 70-7/8"	25-3/8" x 70-7/8"	25-5/16" x 70-11/16"	25-1/8" x 70-11/16"	25-3/16" x 70-11/16"

Above glass sizes are for standard top and bottom rails for surface closer and 1/2" threshold. For special height glass sizes, see formulas above.

GLASS SIZES FOR 36" X 84" OFFSET DOOR LEAVES WITH OVERHEAD CONCEALED CLOSER

DOOR STILE	1/4" (6) GLASS			1" (25) GLASS		
	BUTT HINGES OR OFFSET PIVOTS	STANDARD GEARED HINGE	VANGUARD SECURITY ASTRAGAL	BUTT HINGES OR OFFSET PIVOT	STANDARD GEARED HINGE	VANGUARD SECURITY ASTRAGAL
Series 800 Medium Stile (DS191 Top, WS690 Bottom Rail)	28-1/2" x 73-1/16"	28-5/16" x 73-1/16"	28-5/8" x 73-1/16"	28-5/16" x 72-7/8"	28-1/8" x 72-7/8"	28-7/16" x 72-7/8"
Series 850 Wide Stile (WS690 Top, WS690 Bottom Rail)	25-1/2" x 69-7/8"	25-5/16" x 69-7/8"	25-3/8" x 69-7/8"	25-5/16" x 69-11/16"	25-1/8" x 69-11/16"	25-3/16" x 69-11/16"

Above glass sizes are for standard top and bottom rails for overhead concealed closer and 1/2" threshold. For special height glass sizes, see formulas above.

Glass Formulas for Custom Door Widths and Heights

Durafront Entrance Systems
- Series 800
- Series 850

GLASS HEIGHT FORMULAS FOR RAIL COMBINATIONS AND CUSTOM HEIGHT DOORS

Door Opening Height - [Top Clearance + Top Rail Size + Top Glass Clearance + Bottom Clearance + Bottom Rail Size + Bottom Glass Clearance] = Glass Height

EXAMPLE 1: 84" Door Opening Height with Butt Hinges and 1/4" (6) Glass: DS191 Top Rail and WS690 Bottom Rail with 1/2" Threshold.
FORMULA: 84" - [3-5/8" + 7-11/32"] = 73-1/32" (73-1/16") Glass Height Size.

EXAMPLE 2: 96" Door Opening Height with Butt Hinges and 1" (25) Glass: WS690 Top Rail and WS295 Bottom Rail with 1/2" Threshold.
FORMULA: 96" - [6-7/8" + 10-7/16"] = 78-11/16" Glass Height Size.

NOTE: Round Glass Calculations Up to the Nearest 1/16 Inch. (As Seen in Example 1 Above).

RAIL SIZES:

DS191	3-11/32"
WS691	5-1/2"
WS690	6-1/2"
WS295	9-1/2"

DOOR CLEARANCES:

At Top Rail	1/8"
At Bottom Rail	11/16" @ 1/2" Threshold
1/4" (6) Glass	7/32" (Top) and 3/32" (Bottom)
1" (25) Glass	13/32" (Top) and 3/32" (Bottom)

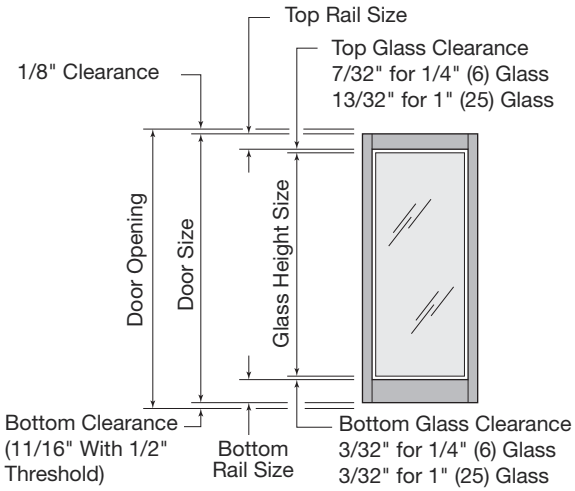

CUSTOM WIDTH DOORS FOR CENTER HUNG, BUTT HINGES, AND OFFSET PIVOTS

DOOR STILE		1/4" (6) GLASS	1" (25) GLASS
Series 800 Medium Stile	Single Door	Door Opening Width minus 7-1/2"	Door Opening Width minus 7-11/16"
	Pair of Doors	Door Opening Width divided by 2, minus 7-1/2"	Door Opening Width divided by 2, minus 7-11/16"
Series 850 Wide Stile	Single Door	Door Opening Width minus 10-1/2"	Door Opening Width minus 10-11/16"
	Pair of Doors	Door Opening Width divided by 2, minus 10-1/2"	Door Opening Width divided by 2, minus 10-11/16"

CUSTOM WIDTH DOORS FOR CONTINUOUS GEARED HINGE

DOOR STILE		1/4" (6) GLASS	1" (25) GLASS
Series 800 Medium Stile	Single Door	Door Opening Width minus 7-11/16"	Door Opening Width minus 7-7/8"
	Pair of Doors	Door Opening Width divided by 2, minus 7-11/16"	Door Opening Width divided by 2, minus 7-7/8"
Series 850 Wide Stile	Single Door	Door Opening Width minus 10-11/16"	Door Opening Width minus 10-7/8"
	Pair of Doors	Door Opening Width divided by 2, minus 10-11/16"	Door Opening Width divided by 2, minus 10-7/8"

CUSTOM WIDTH DOORS FOR VANGUARD SECURITY ASTRAGAL

DOOR STILE		1/4" (6) GLASS	1" (25) GLASS
Series 800 Medium Stile	Pair of Doors	Door Opening Width divided by 2, minus 7-3/8"	Door Opening Width divided by 2, minus 7-9/16"
Series 850 Wide Stile	Pair of Doors	Door Opening Width divided by 2, minus 10-5/8"	Door Opening Width divided by 2, minus 10-13/16"

ENTRANCES

Custom Door Quote/Order Request Form

PAGE 1 OF 2

Fax Completed Checklist to U.S. Aluminum Technical Sales at (866) 262-3299. Then call to discuss: (800) 262-5151 (U.S.), (877) 421-6144 (Canada), or (323) 588-1281 (International). Ask for Extension 5305. This form is also available online at **usalum.com**.

- Series 250
- Series 400
- Series 550
- Series 800
- Series 850

Company Name _____ Phone # _____
Contact _____ Fax # _____
Job Name _____ Date _____

When you are ready to order, utilize this form to assist you in covering the details required to complete a Custom Door Entrance installation. Going through this exercise should prevent you from overlooking any details related to your installation.

IMPORTANT: Depending on the complexity of your project, one or more of the following may be required to accurately order: sketches or drawings of your particular application with dimensions; printed architectural drawings or CAD files; photos of job site conditions (digital images are preferable). **NOTE:** A final sign off is required prior to any custom fabrication.

DOOR STILE

- ❑ Series 250, Narrow
- ❑ Series 400, Medium
- ❑ Series 550, Wide
- ❑ Series 800, Medium Heavy Wall
- ❑ Series 850, Wide Heavy Wall

DOOR FINISH

- ❑ Clear Anodized
- ❑ Dark Bronze Anodized
- ❑ Black Anodized
- ❑ Custom Duranar 70% Kynar

_____

DOOR OPENING SIZE

- ❑ 36" x 84" (914 x 2134)
- ❑ 42" x 84" (1067 x 2134)
- ❑ 72" x 84" (1829 x 2134)
- ❑ Custom

_____

DOOR GLASS (BY OTHERS)

- ❑ With 1/4" (6) Square Stops
- ❑ With 1/4" (6) Bevel Stops
- ❑ With 1" (25) Stops

DOOR SWING CHART

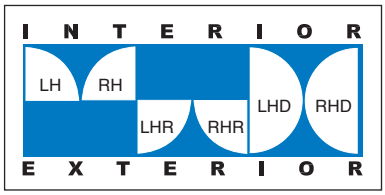

Use the Door Swing Chart to determine how the door(s) should be handed.

DOOR SWING

	QTY
❑ LH Hinge Left Swing In	____ ea.
❑ RH Hinge Right Swing In	____ ea.
❑ LHR Hinge Left Swing Out	____ ea.
❑ RHR Hinge Right Swing Out	____ ea.
❑ LHD Hinge Left Double Acting	____ ea.
❑ RHD Hinge Right Double Acting	____ ea.
❑ PAIR Swing In	____ ea.
❑ PAIR Swing Out	____ ea.
❑ PAIR Double Acting	____ ea.

FRAME SYSTEM

Center Pivot

- ❑ Series 400, Tubular 1-3/4" x 4"
- ❑ Series 400, Open Back 1-3/4" x 4"
- ❑ Series 450, Tubular 1-3/4" x 4-1/2"
- ❑ Series 450, Open Back 1-3/4" x 4-1/2"
- ❑ Series 451, Tubular 2" x 4-1/2"
- ❑ Series 451, Open Back 2" x 4-1/2"

Offset Pivot

- ❑ Series 400, Tubular 1-3/4" x 4"
- ❑ Series 400, Open Back 1-3/4" x 4"
- ❑ Series 450, Tubular 1-3/4" x 4-1/2"
- ❑ Series 450, Open Back 1-3/4" x 4-1/2"
- ❑ Series 451, Tubular 2" x 4-1/2"
- ❑ Series 451, Open Back 2" x 4-1/2"

FRAME TYPE

- ❑ Subframe
- ❑ Up and Over (No Transom)
- ❑ 126" (3.2 m) High With Transom
- ❑ Frame Only
- ❑ Door Only (No Frame)
- ❑ Durafront Frame
- ❑ Custom

_____

BOTTOM RAIL

- ❑ Standard
- ❑ A.D.A. 9-1/2" (241) Rail
- ❑ Custom

_____

Custom Door Quote/Order Request Form

PAGE 2 OF 2

- Series 250
- Series 400
- Series 550
- Series 800
- Series 850

DOOR SWEEP

- ❑ Yes ❑ No
- ❑ Exposed Fasteners
- ❑ Concealed Fasteners

CONCEALED WEATHERSTRIP

- ❑ Top Rail
- ❑ Bottom Rail
- ❑ Both

PUSH/PULL HARDWARE

- ❑ Standard Push Bars
- ❑ Standard Push/Pull
- ❑ Offset Pulls
- ❑ None (Supplied by Others)

DOOR HINGING

- ❑ Top/Bottom Offset Pivots
- ❑ 1 Pair Butt Hinges
- ❑ Center Pivot (Double Acting)
- ❑ Continuous Geared Hinge
- ❑ Intermediate Pivots
  Add_____ per Door
- ❑ Intermediate Butt Hinges
  Add_____ per Door

DOOR HARDWARE FINISH

- ❑ Clear Anodized
- ❑ Bronze Anodized
- ❑ Champagne Anodized
- ❑ Other (Specify)

_____

DOOR CLOSER

- ❑ O.H. Concealed (Double Acting)
- ❑ O.H. Concealed (Offset)
- ❑ 90°
- ❑ 105°
  Hold Open ❑ Yes ❑ No
- ❑ Surface Mount
- ❑ Drop Plate
- ❑ Door Stop
- ❑ No Closer Required

MID-PANEL (MUNTIN)

- ❑ 1-5/8" (41.3)
- ❑ 3" (76.2)
- ❑ 6" (152.4)
- ❑ 7-3/16" (182.6)
- ❑ 7-1/2" (190.5)
- ❑ 10-1/2" (266.7)
- ❑ Custom

_____

PANIC DEVICES

- ❑ Rim Panic With Crashbar
- ❑ Concealed Panic With Crashbar
- ❑ Mid-Panel Device
- ❑ Rim Panic With Push Pad
- ❑ Concealed Panic With Push Pad
- ❑ CRL-Blumcraft Panic
- ❑ Removable Mullion
- ❑ Vanguard Security Astragal
- ❑ Custom

_____

THRESHOLD

- ❑ None
- ❑ Standard
- ❑ Custom

_____

LOCKING OPTIONS

- ❑ MS Deadbolt With Two Cylinders
- ❑ Thumbturn in Lieu of Cylinder
- ❑ 3-Point Locking @ Pair
- ❑ Lock Indicator
- ❑ Cylinder Guard
- ❑ Flushbolts
- ❑ A.R. Latch/Deadlock
- ❑ A.R. Hook Throw Deadlock
- ❑ Paddle Handle
- ❑ A.R. Lever Handle
- ❑ CRL Lever Handle
- ❑ Electric Strike
- ❑ No Locking Hardware

LAYOUT GRID TO SKETCH DESIGN

ENTRANCES

Table of Contents

Platinum Full Framed Doors
- Series FFN1
- Series FFM1
- Series FFW1

SECTION H3 PAGE

SPECIFICATIONS 02-H3
TECHNICAL DATA 03-H3
TYPICAL DETAILS.....04-H3 thru 06-H3
DOOR CORNER CONSTRUCTION 07-H3
QUOTE/ORDER FORM .....08-H3 and 09-H3

Due to the diversity in state/provincial, local, and federal laws and codes that govern the design and application of architectural products, it is the responsibility of the individual architect, owner, and installer to ensure that products selected for use on projects comply with all applicable building codes and laws. U.S. Aluminum exercises no control over the use or application of its products, glazing materials, and operating hardware, and assumes no responsibility thereof.

The rapidly changing technology within the architectural aluminum products industry demands that U.S. Aluminum reserve the right to revise, discontinue or change any product line, specification or electronic media without prior written notice.

NOTE: Dimensions in parentheses ( ) are millimeters unless otherwise noted.
Other metric units shown in this publication are:

m - meter	Kg - kilogram
Pa - pascal	KPa - kilopascal
MPa - megapascal	

ENTRANCES

Specifications

Platinum Full Framed Doors

- Series FFN1
- Series FFM1
- Series FFW1

SECTION 08 11 16 ALUMINUM DOORS AND FRAMES

SERIES	STILES	CHOICE OF TOP RAIL	CHOICE OF BOTTOM RAIL	GLAZING INFILL
FFN1 Narrow Stile	3" (76)	4" (102) 5" (127) 10" (254)	4" (102) 5" (127) 10" (254)	1/4" (6) or 1" (25)
FFM1 Medium Stile	4-1/16" (103)			1/4" (6) or 1" (25)
FFW1 Wide Stile	5-9/16" (141)			1/4" (6) or 1" (25)
A.D.A. Bottom Rail Option for Any Series			10" (254)	

I. GENERAL DESCRIPTION

Work Included: The glazing contractor shall furnish all necessary materials, labor and equipment for the complete installation of aluminum entrance doors, door frames and hardware as detailed on the drawings and specified herein.
Work Not Included: Structural support of the framing system, wood framing, structural steel, masonry, and final cleaning.

QUALITY ASSURANCE

For purposes of designating type and quality for work in this section, drawings and specifications are based on one of the following U.S. Aluminum Platinum Series FFN1, FFM1 or FFW1 Entrance Doors.
Optional: Door shall have A.D.A. 10" (254) bottom rail.
When substitute products are to be considered, supporting technical literature, samples and drawings must be submitted 10 days prior to bid date in order to make a valid comparison of the products involved.

II. PRODUCT MATERIALS

Door members shall be extruded architectural aluminum 6063-T5 alloy and temper. Major portions of all door sections, shall be nominal .125 (3.2) inch. Wall thickness of frame members shall be nominal .093 (2.4) inch. Glazing to be 1/4" (6) or 1" (25) monolithic, laminated or insulating glass (specify). Screws, nuts, washers, bolts, rivets, and other fastening devices shall be aluminum, stainless steel or other non-corrosive materials.

DOOR CONSTRUCTION

Door stiles and rails shall be tubular sections accurately joined at corners with heavy concealed reinforcement brackets secured with bolts, and screws. Doors shall have no exposed stops with E.P.D.M. glazing gasket on both sides of the glass.
No exposed screws shall be permitted.
Each door leaf shall be equipped with an adjusting mechanism, located in the top rail near the lock stile, which provides for minor clearance adjustments after installation.
A hard-backed poly-pile weatherstripped shall be installed in both stiles of center hung single doors and in hinge stiles of center hung pair of doors. Offset pivoted or butt hung doors shall have weatherstripped doorstops at frame jambs and header.
The active meeting stile of all pair of doors shall have an adjustable astragal with double line of weather-stripping.
OPTIONAL: Door bottom rail will be weatherstripped with an E.P.D.M. blade gasket sweep strip applied with concealed fasteners. (**NOTE:** This option is required for high performance conditions.)
OPTIONAL: Door bottom rail shall receive a concealed weatherstripped insert.

HARDWARE

Hardware for aluminum doors and door frames shall be the entrance manufacturer's standard. If custom hardware is to be furnished by others, templates and physical hardware must be submitted prior to any fabrication.

FINISH

All exposed framing surfaces shall be free of scratches and other serious blemishes. Aluminum extrusions shall be cladded...
(*Specify one of the following*):
_____Brushed Stainless
_____Polished Stainless
_____Polished Brass
_____Satin Brass
_____Satin Anodized
_____Dark Bronze Anodized
_____Oil Rubbed Bronze

A Fluoropolymer paint coating conforming with the requirements of AAMA 2605. Color shall be (*Specify a U.S. Aluminum standard color*).

III. EXECUTION INSTALLATION

All items under this heading shall be set in their correct locations as shown in the details and shall be level, square, plumb, and at proper elevation and in alignment with other work in accordance with the manufacturer's installation instructions and approved shop drawings. All joints between entrance framing and the building structure shall be sealed in order to secure a watertight installation.
Upon completion of the installation of the entrances, it shall be the contractor's responsibility to make all necessary final adjustments to attain normal operation of each door and its mechanical hardware.

PROTECTION AND CLEANING

After installation the General Contractor shall adequately protect exposed portions of the aluminum entrance work from damage by grinding and polishing compounds, plaster, lime, acid, cement or other contaminants. The General Contractor shall be responsible for final cleaning.

ENTRANCES

Technical Data

Platinum Full Framed Doors

- Series FFN1
- Series FFM1
- Series FFW1

We manufacture a full line of Architectural Full Framed Doors for interior and exterior applications. These innovative door systems are available in seven standard architectural finishes, with custom finishes available on special order. Our Platinum Series Full Framed Doors are made to order and can be designed for almost any application. With the ability to prep and install almost any architectural hardware configuration, we are confident we can meet your design requirements. We offer a wide selection of top and bottom rail sizes. Mid-rails or applied mullions can be incorporated.

SERIES	STILES	CHOICE OF TOP RAIL	CHOICE OF BOTTOM RAIL	TRAFFIC APPLICATIONS
FFN1 Narrow Stile	3" (76)	4" (102) 5" (127) 10" (254)	4" (102) 5" (127) 10" (254)	Light to Moderate
FFM1 Medium Stile	4-1/16" (103)			Moderate to Heavy
FFW1 Wide Stile	5-9/16" (141)			Heavy

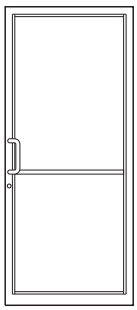

Series FFN1 - Narrow Stile
(Offset hung door shown)

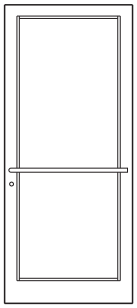

Series FFM1 - Medium Stile
(Center hung door shown)

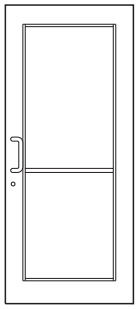

Series FFW1 - Wide Stile
(Offset hung door shown)

STANDARD FEATURES:

- Supplied With 1/4" to 1" (6 to 25) Monolithic, Laminated or Insulating Glass
- Narrow, Medium, and Wide Stiles to Choose From
- No Exposed Glass Stops
- Clad Aluminum Construction
- Seven Standard Architectural Finishes

ORDERING INFORMATION:

All Platinum Full Framed Doors are manufactured to order. To request a quote or place an order you need to specify the door size, top and bottom rail heights, glass type and thickness, finish required, and what hardware type is needed for the application.

Platinum Full Framed Doors can be prepped and supplied with CRL Panic Handles, Push/Pulls, Ladder Style Handles, Three Point Locks, Intermediate Pivots, Butt Hinges, Flush Bolts, and even Balanced Door Hardware. Our Full Framed Door product line can also support Floor Closers, Overhead Concealed Closers, and Door Holders. Contact Technical Sales at (800) 262-5151 in the U.S. or from Canada, and ask for Ext. 5305. You can also send e-mail from the **usalum.com** home page.

ENTRANCES

Typical Details

Platinum Full Framed Doors
• Series FFN1

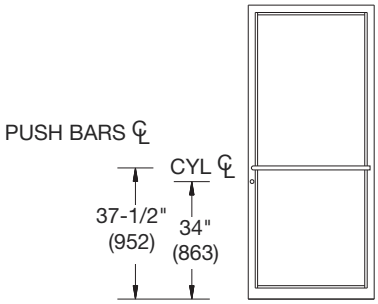

CENTER HUNG DOOR

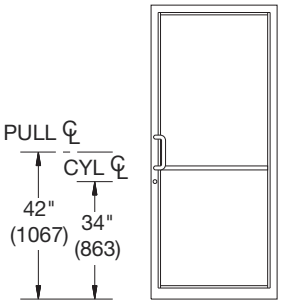

OFFSET HUNG DOOR

3" (76)
Narrow Stile

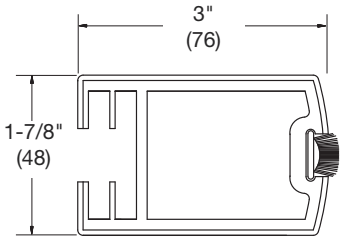

CENTER HUNG DOORS
Narrow Radius Stile for Center Hung
and Meeting Point Conditions

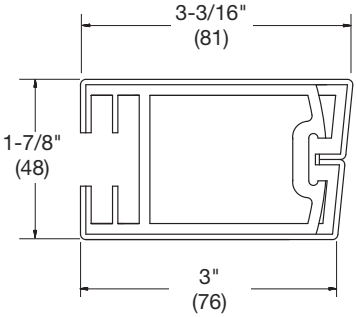

OFFSET HUNG DOORS
Narrow Beveled Stile for
Butt Hinge/Offset Pivot Conditions

10" (254) 5" (127) 4" (102)

Choice of Top and Bottom Rails

DOOR SWING CHART

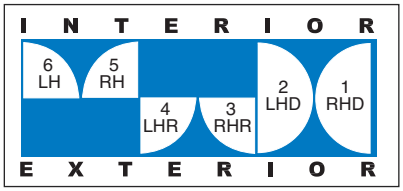

Use the Door Swing Chart to determine how the door(s) should be handed.

NARROW STILE FULL FRAMED DOORS

PART NO.	FINISH
FFN1BS	Brushed Stainless
FFN1PS	Polished Stainless
FFN1PB	Polished Brass
FFN1SB	Satin Brass
FFN1SA	Satin Anodized
FFN1DU	Dark Bronze Anodized
FFN10RB	Oil Rubbed Bronze

Minimum order: 1 each.

NOT TO SCALE

ENTRANCES

Typical Details

Platinum Full Framed Doors
• Series FFM1

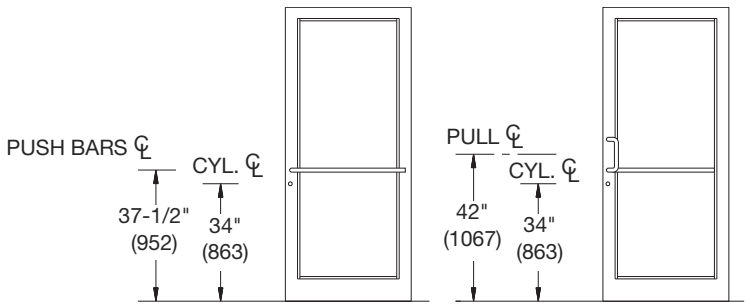

CENTER HUNG DOOR

OFFSET HUNG DOOR

4-1/16" (103)
Medium Stile

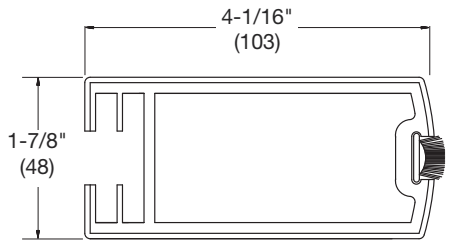

CENTER HUNG DOORS
Medium Radius Stile for Center Hung
and Meeting Point Conditions

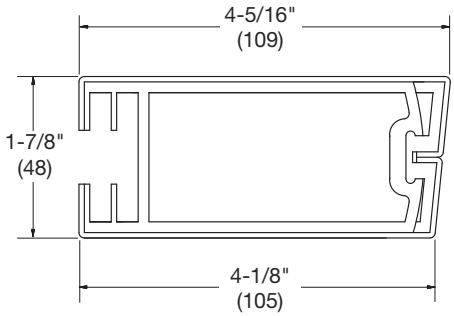

OFFSET HUNG DOORS
Medium Beveled Stile for
Butt HInge/Offset Pivot Conditions

10"
(254)

5"
(127)

4"
(102)

Choice of Top and Bottom Rails

DOOR SWING CHART

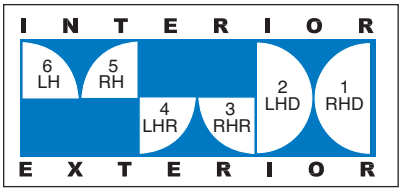

Use the Door Swing Chart to determine how the door(s) should be handed.

MEDIUM STILE FULL FRAMED DOORS

PART NO.	FINISH
FFM1BS	Brushed Stainless
FFM1PS	Polished Stainless
FFM1PB	Polished Brass
FFM1SB	Satin Brass
FFM1SA	Satin Anodized
FFM1DU	Dark Bronze Anodized
FFM10RB	Oil Rubbed Bronze

Minimum order: 1 each.

NOT TO SCALE

ENTRANCES

Typical Details

Platinum Full Framed Doors
• Series FFW1

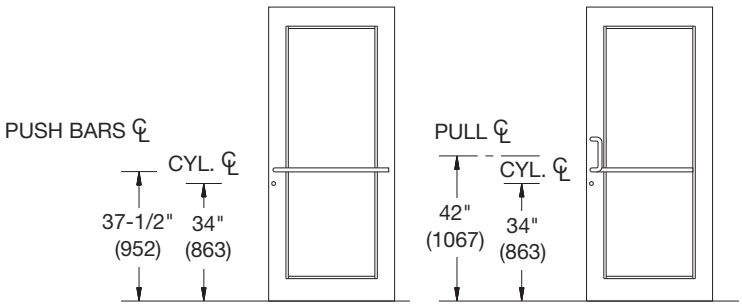

CENTER HUNG DOOR

OFFSET HUNG DOOR

5-9/16" (141)
Wide Stile

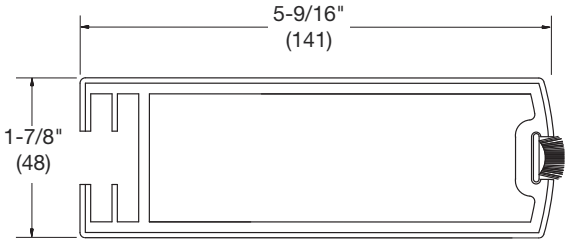

CENTER HUNG DOORS
Wide Radius Stile for Center Hung
and Meeting Point Conditions

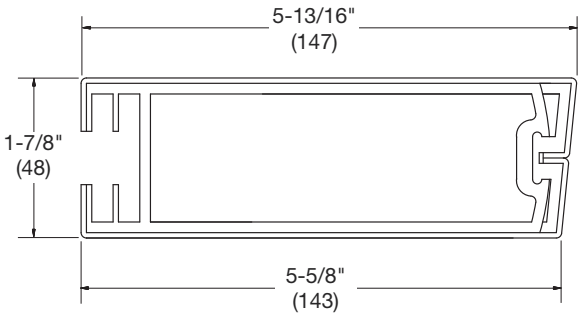

OFFSET HUNG DOORS
Wide Beveled Stile for
Butt Hinge/Offset Pivot Conditions

10" (254) 5" (127) 4" (102)

Choice of Top and Bottom Rails

DOOR SWING CHART

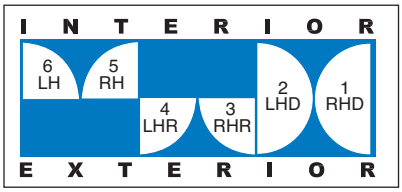

Use the Door Swing Chart to determine how the door(s) should be handed.

WIDE STILE FULL FRAMED DOORS

PART NO.	FINISH
FFW1BS	Brushed Stainless
FFW1PS	Polished Stainless
FFW1PB	Polished Brass
FFW1SB	Satin Brass
FFW1SA	Satin Anodized
FFW1DU	Dark Bronze Anodized
FFW10RB	Oil Rubbed Bronze

Minimum order: 1 each.

NOT TO SCALE

ENTRANCES

Door Corner Construction

Platinum Full Framed Doors

- Series FFN1
- Series FFM1
- Series FFW1

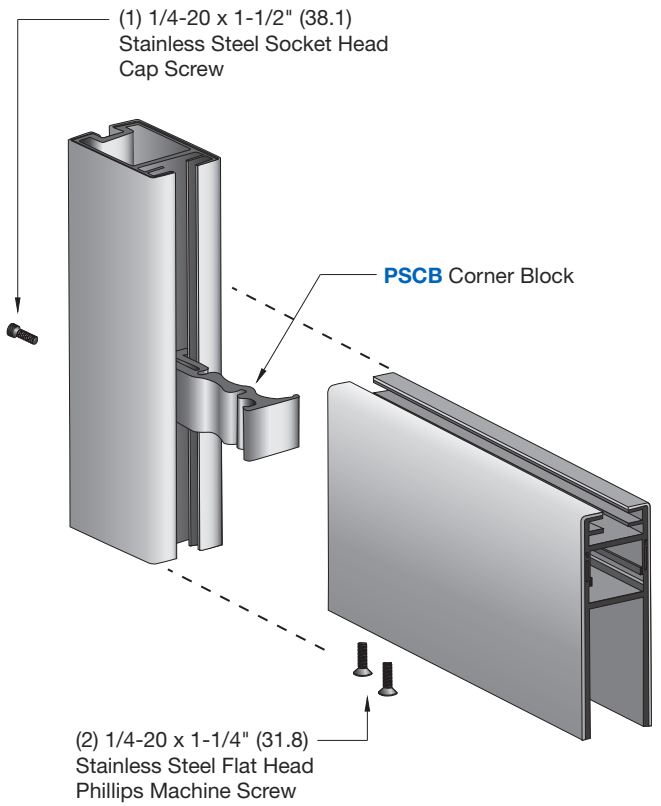

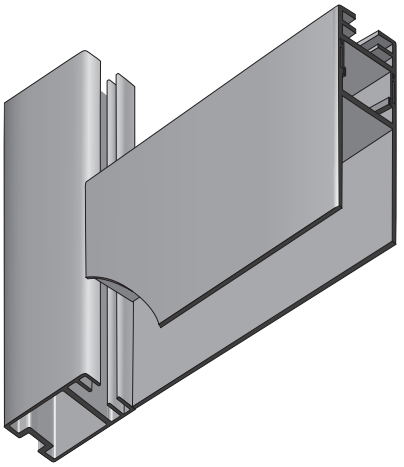

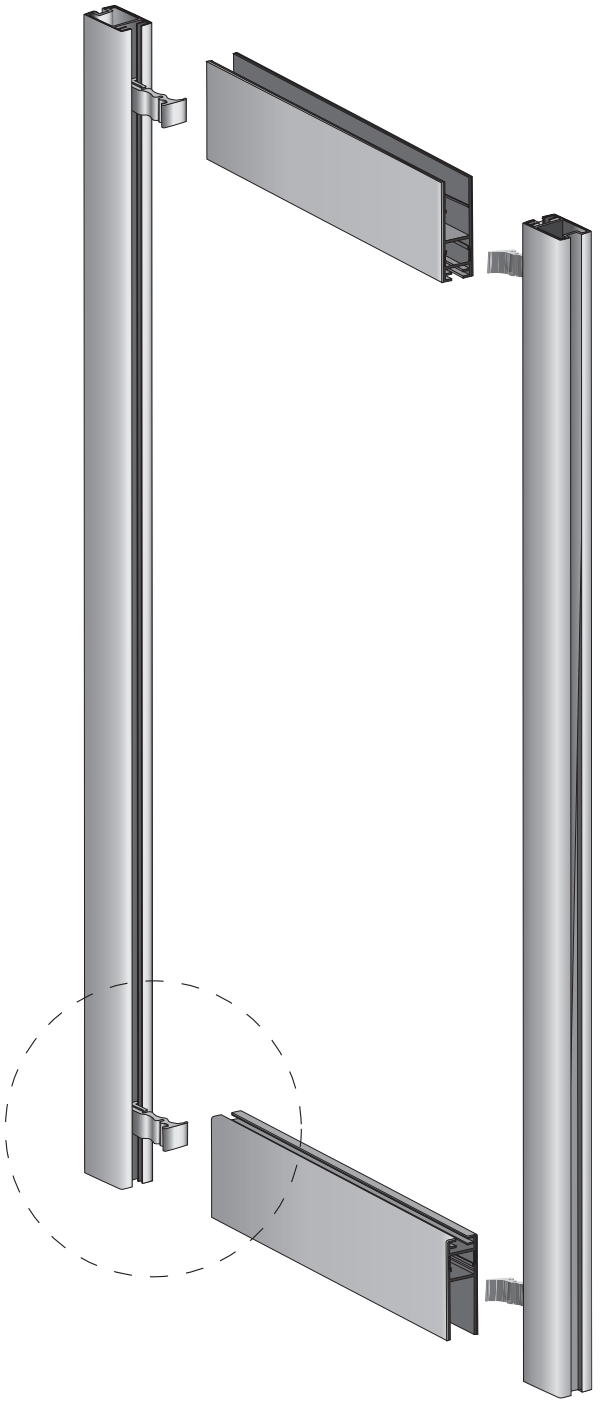

CRL U.S. ALUMINUM

ENTRANCES

Custom Door Quote/Order Request Form

- Series FFN1
- Series FFM1
- Series FFW1

PAGE 1 OF 2

Fax Completed Checklist to U.S. Aluminum Technical Sales at (866) 262-3299. Then call to discuss: (800) 262-5151 (U.S.), (877) 421-6144 (Canada), or (323) 588-1281 (International). Ask for Extension 5305. This form is also available online at **usalum.com**.

Company Name _____ Phone # _____
Contact _____ Fax # _____
Job Name _____ Date _____

When you are ready to order, utilize this form to assist you in covering the details required to complete a Custom Door Entrance installation. Going through this exercise should prevent you from overlooking any details related to your installation.

IMPORTANT: Depending on the complexity of your project, one or more of the following may be required to accurately order: sketches or drawings of your particular application with dimensions; printed architectural drawings or CAD files; photos of job site conditions (digital images are preferable). **NOTE:** A final sign off is required prior to any custom fabrication.

DOOR STILE

- ❑ Series FFN1, Narrow
- ❑ Series FFM1, Medium
- ❑ Series FFW1, Wide

DOOR FINISH (CLAD)

- ❑ Brushed Stainless
- ❑ Polished Stainless
- ❑ Polished Brass
- ❑ Satin Brass
- ❑ Satin Anodized
- ❑ Dark Bronze Anodized
- ❑ Oil Rubbed Bronze

DOOR OPENING SIZE

- ❑ 36" x 84" (914 x 2134)
- ❑ 42" x 84" (1067 x 2134)
- ❑ 72" x 84" (1829 x 2134)
- ❑ Custom

_____

DOOR GLASS

- ❑ 1/4" (6) Clear Tempered
- ❑ 1/4" (6) Clear Laminated
- ❑ 1" (25) Clear I.G. Tempered
- ❑ Other (Specify)

_____

DOOR SWING CHART

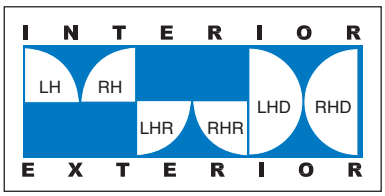

Use the Door Swing Chart to determine how the door(s) should be handed.

DOOR SWING

	QTY
❑ LH Hinge Left Swing In	____ ea.
❑ RH Hinge Right Swing In	____ ea.
❑ LHR Hinge Left Swing Out	____ ea.
❑ RHR Hinge Right Swing Out	____ ea.
❑ LHD Hinge Left Double Acting	____ ea.
❑ RHD Hinge Right Double Acting	____ ea.
❑ PAIR Swing In	____ ea.
❑ PAIR Swing Out	____ ea.
❑ PAIR Double Acting	____ ea.

TOP RAIL

- ❑ 4" (102) Rail
- ❑ 5" (127) Rail
- ❑ 10" (254) Rail
- ❑ Custom

_____

FRAME SYSTEM

Center Pivot

- ❑ Series 400, Tubular 1-3/4" x 4"
- ❑ Series 400, Open Back 1-3/4" x 4"
- ❑ Series 450, Tubular 1-3/4" x 4-1/2"
- ❑ Series 450, Open Back 1-3/4" x 4-1/2"
- ❑ Series 451, Tubular 2" x 4-1/2"
- ❑ Series 451, Open Back 2" x 4-1/2"

Offset Pivot

- ❑ Series 400, Tubular 1-3/4" x 4"
- ❑ Series 400, Open Back 1-3/4" x 4"
- ❑ Series 450, Tubular 1-3/4" x 4-1/2"
- ❑ Series 450, Open Back 1-3/4" x 4-1/2"
- ❑ Series 451, Tubular 2" x 4-1/2"
- ❑ Series 451, Open Back 2" x 4-1/2"

FRAME TYPE

- ❑ Subframe
- ❑ Up and Over (No Transom)
- ❑ 126" (3.2 m) High With Transom
- ❑ Frame Only
- ❑ Door Only (No Frame)
- ❑ Custom

_____

BOTTOM RAIL

- ❑ 4" (102) Rail
- ❑ 5" (127) Rail
- ❑ A.D.A. 10" (254) Rail
- ❑ Custom

_____

ENTRANCES

Custom Door Quote/Order Request Form

- Series FFN1
- Series FFM1
- Series FFW1

PAGE 2 OF 2

PUSH/PULL HARDWARE

- ❑ Standard Push Bars
- ❑ Standard Push/Pull
- ❑ Offset Pulls
- ❑ None (Supplied by Others)

DOOR HINGING

- ❑ Top/Bottom Offset Pivots
- ❑ 1 Pair Butt Hinges
- ❑ Center Pivot (Double Acting)
- ❑ Continuous Geared Hinge
- ❑ Intermediate Pivots
  Add _____ per Door
- ❑ Intermediate Butt Hinges
  Add _____ per Door

PANIC DEVICES

- ❑ Rim Panic With Crashbar
- ❑ Concealed Panic With Crashbar
- ❑ Mid-Panel Device
- ❑ Rim Panic With Push Pad
- ❑ Concealed Panic With Push Pad
- ❑ CRL-Blumcraft Panic
- ❑ Removable Mullion
- ❑ Custom

_____

DOOR HARDWARE FINISH

- ❑ Clear Anodized
- ❑ Bronze Anodized
- ❑ Champagne Anodized
- ❑ Other (Specify)

_____

THRESHOLD

- ❑ None
- ❑ Standard
- ❑ Custom

_____

DOOR SWEEP

- ❑ Yes ❑ No
- ❑ Exposed Fasteners
- ❑ Concealed Fasteners

DOOR CLOSER

- ❑ O.H. Concealed (Double Acting)
- ❑ O.H. Concealed (Offset)
- ❑ 90°
- ❑ 105°
  Hold Open ❑ Yes ❑ No
- ❑ Surface Mount
- ❑ Drop Plate
- ❑ Door Stop
- ❑ No Closer Required

LOCKING OPTIONS

- ❑ MS Deadbolt With Two Cylinders
- ❑ Thumbturn in Lieu of Cylinder
- ❑ 3-Point Locking @ Pair
- ❑ Lock Indicator
- ❑ Cylinder Guard
- ❑ Flushbolts
- ❑ A.R. Latch/Deadlock
- ❑ A.R. Hook Throw Deadlock
- ❑ Paddle Handle
- ❑ A.R. Lever Handle
- ❑ CRL Lever Handle
- ❑ Electric Strike
- ❑ No Locking Hardware

LAYOUT GRID TO SKETCH DESIGN

ENTRANCES

Table of Contents

Thermal Doors
- Series 400-T
- Series 550-T

SECTION H4 PAGE

SPECIFICATIONS 02-H4
TECHNICAL DATA 03-H4
TYPICAL DETAILS .....04-H4 and 05-H4
DOOR CORNER CONSTRUCTION 06-H4
GLASS SIZE FORMULAS 07-H4
QUOTE/ORDER FORM .....08-H4 and 09-H4

Project: AP Solis Middle School, Donna, TX

Due to the diversity in state/provincial, local, and federal laws and codes that govern the design and application of architectural products, it is the responsibility of the individual architect, owner, and installer to ensure that products selected for use on projects comply with all applicable building codes and laws. U.S. Aluminum exercises no control over the use or application of its products, glazing materials, and operating hardware, and assumes no responsibility thereof.

The rapidly changing technology within the architectural aluminum products industry demands that U.S. Aluminum reserve the right to revise, discontinue or change any product line, specification or electronic media without prior written notice.

NOTE: Dimensions in parentheses ( ) are millimeters unless otherwise noted.
Other metric units shown in this publication are:

m - meter	Kg - kilogram
Pa - pascal	KPa - kilopascal
MPa - megapascal	

ENTRANCES

Specifications

Thermal Doors
- Series 400-T
- Series 550-T

SECTION 08 11 16 ALUMINUM DOORS AND FRAMES

SERIES	STILES	TOP RAIL	BOTTOM RAIL	GLAZING INFILL
400-T Medium Stile	4-1/4" (108 mm)	4-5/16" (109.5 mm)	7-1/4" (184.2 mm)	1" (25)
550-T Wide Stile	5-1/2" (139.7)	6" (152.4)	7" (177.8)	1" (25)
A.D.A. Bottom Rail Option			10" (254)	

I. GENERAL DESCRIPTION
Work Included: The glazing contractor shall furnish all necessary materials, labor, and equipment for the complete installation of aluminum entrance doors, door frames, and hardware as detailed on the drawings and specified herein.
Work Not Included: Structural support of the framing system, wood framing, structural steel, masonry, and final cleaning.

QUALITY ASSURANCE
For purposes of designating type and quality for work in this section, drawings and specifications are based on U.S. Aluminum Series 400-T or 550-T Entrance Doors.
OPTIONAL: Door shall have ADA 10" (254) bottom rail.
When substitute products are to be considered, supporting technical literature, samples, and drawings must be submitted 10 days prior to bid date in order to make a valid comparison of the products involved.

II. PRODUCTS MATERIALS
Door members shall be extruded architectural aluminum 6063-T5 alloy and temper and joined together by a rigid thermal barrier. Major portions of all door sections, except glazing beads, shall be nominal .125 (3.2). Wall thickness of frame members shall be nominal .093 (2.4). Screws, nuts, washers, bolts, rivets, and other fastening devices shall be aluminum, stainless steel or other non-corrosive materials.

DOOR CONSTRUCTION
Door stiles and rails shall be aluminum extrusions accurately joined by either a polyamide nylon thermal break or a polyurethane polymer thermal break and heavy concealed reinforcement brackets secured with bolts, screws, and then MIG welded. Doors shall have two hook on glass stops with E.P.D.M. glazing gasket on both sides of the glass. No exposed screws shall be permitted. Each door leaf shall be equipped with an adjusting mechanism, located in the top rail near the lock stile, which provides for minor clearance adjustments after installation.
A hard-backed poly-pile weatherstrip shall be installed in both stiles of center hung single doors and in hinge stiles of center hung pair of doors.
Offset pivoted or butt hung doors shall have weatherstripped door stops at frame jambs and header. The active meeting stile of all pairs of doors shall have an adjustable astragal with double line of weatherstripping.
OPTIONAL: Door bottom rail will be weathered with an E.P.D.M. blade gasket sweep strip applied with concealed fasteners. (**NOTE:** This option is required for high performance conditions.)
OPTIONAL: Door bottom rail shall receive a concealed weatherstripped insert.

HARDWARE
Hardware for aluminum doors and door frames shall be the entrance manufacturer's standard. If custom hardware is to be furnished by others, templates and physical hardware must be submitted prior to any fabrication.

FINISH
All exposed framing surfaces shall be free of scratches and other serious blemishes. Aluminum extrusions shall be given a caustic etch followed by an anodic oxide treatment to obtain...
(Specify one of the following):
_____#11 Clear anodic coating
_____#22 Dark Bronze anodic coating
_____#33 Black anodic coating

A Fluoropolymer paint coating conforming with the requirements of AAMA 2605. Color shall be *(Specify a U.S. Aluminum standard color)*.

III. EXECUTION INSTALLATION
All items under this heading shall be set in their correct locations as shown in the details and shall be level, square, plumb and at proper elevation and in alignment with other work in accordance with the manufacturer's installation instructions and approved shop drawings. All joints between entrance framing and the building structure shall be sealed in order to secure a watertight installation.
Upon completion of the installation of the entrances, it shall be the contractor's responsibility to make all necessary final adjustments to attain normal operation of each door and its mechanical hardware.

PROTECTION AND CLEANING
After installation the General Contractor shall adequately protect exposed portions of the aluminum entrance work from damage by grinding and polishing compounds, plaster, lime, acid, cement or other contaminants. The General Contractor shall be responsible for final cleaning.

ENTRANCES

Technical Data

Thermal Doors
- Series 400-T
- Series 550-T

Our Series 400-T and 550-T Thermal Entrances offer a two glass stop design, Polyamide Nylon Thermal Break on 400-T Series, and Polyurethane Polymer Thermal Break on 550-T Series, and mechanically fastened and welded corners, offering one of the best thermal properties available in commercial entrance doors. All doors offer clean lines and are supplied with unique Astral II push/pull hardware and maximum security locks. These entrances can easily accommodate a wide variety of custom hardware for specific job requirements. Optional 10" (254) bottom rail is available for A.D.A. requirements.

STANDARD FEATURES:

Glass Stops - Pressure type glass stop with E.P.D.M. glazing gaskets permit time saving installation of glass. Glass stops are for 1 inch (25) infills. Setting blocks for glass are preset at the factory.

Adjustable Leveling Screw - A simple adjustment on the leveling screw, concealed in the top rail of the door, compensates for minor variances in door openings after installation.

Adjustable Astragal - All pairs of doors come with spring-loaded fully adjustable dual weathered astragals for optimum air resistance. Binding or gaps at the meeting stiles can be easily corrected by simple adjustments. The full length dual weather stripping on the astragal is not interrupted by the deadlock.

ACCESSORIES:

Hinging Hardware
- Offset Pivots for single acting doors
- Butt Hinges for single acting doors

Closers
- Exposed Overhead (Surface Mounted)
- Concealed Overhead with Offset Arm
- Floor Mounted

Panic Exit Devices
- Conventional Push Panel

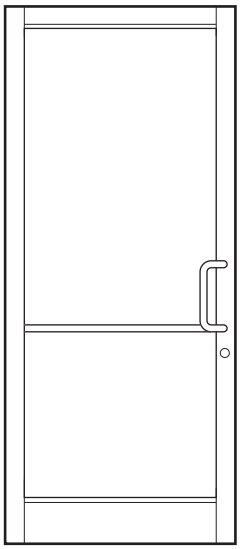

Series 400-T
(Offset Hung Door Shown)

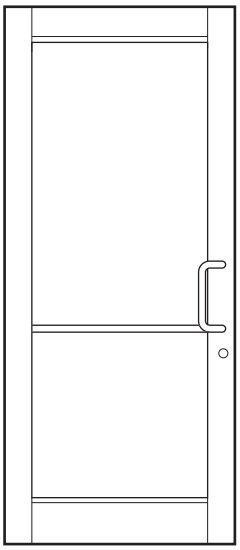

Series 550-T
(Offset Hung Door Shown)

SERIES	STILES	TOP RAIL	BOTTOM RAIL	APPLICATION
400-T Medium Stile	4-1/4" (108 mm)	4-5/16" (109.5 mm)	7-1/4" (184.2 mm)	Moderate to Heavy Traffic
550-T Wide Stile	5-1/2" (139.7)	6" (152.4)	7" (177.8)	Heavy Traffic
A.D.A. Bottom Rail Option			10" (254)	A.D.A.

ENTRANCES

Typical Details

Thermal Doors
• Series 400-T

NOTE: Series 400-T Medium Stile Door Shown in Series 2200 Curtain Wall System. For Additional Framing Details visit **usalum.com**.

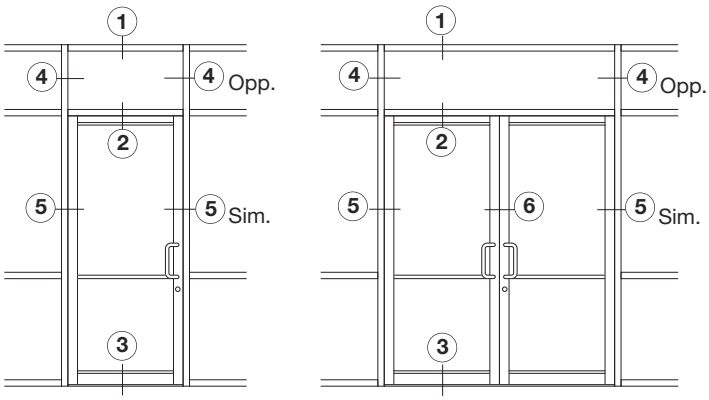

TYPICAL ELEVATIONS

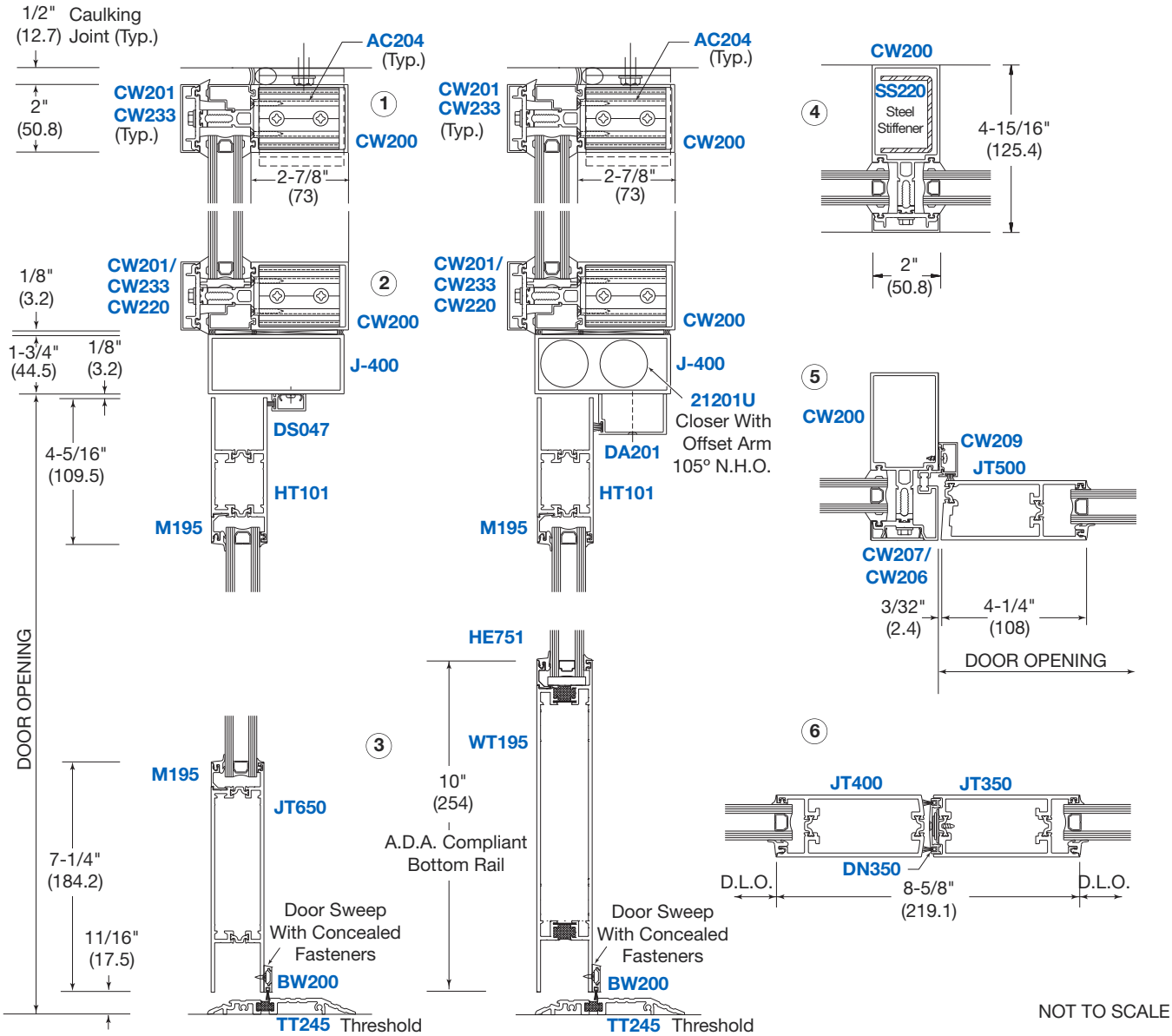

NOT TO SCALE

ENTRANCES

Typical Details

Thermal Doors
• Series 550-T

NOTE: Series 550-T Wide Stile Door Shown in Series 2200 Curtain Wall System. For Additional Framing Details visit **usalum.com**.

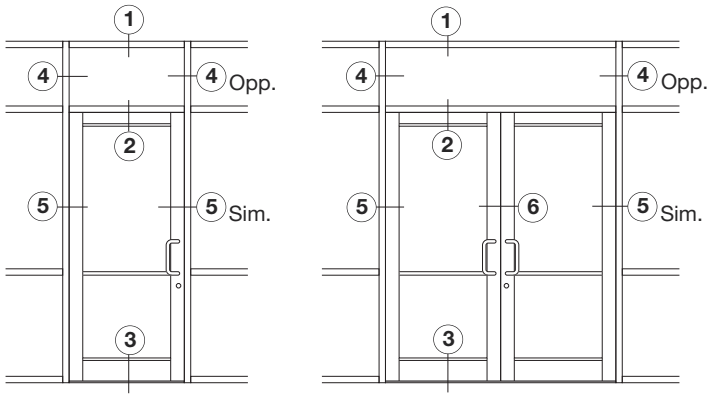

TYPICAL ELEVATIONS

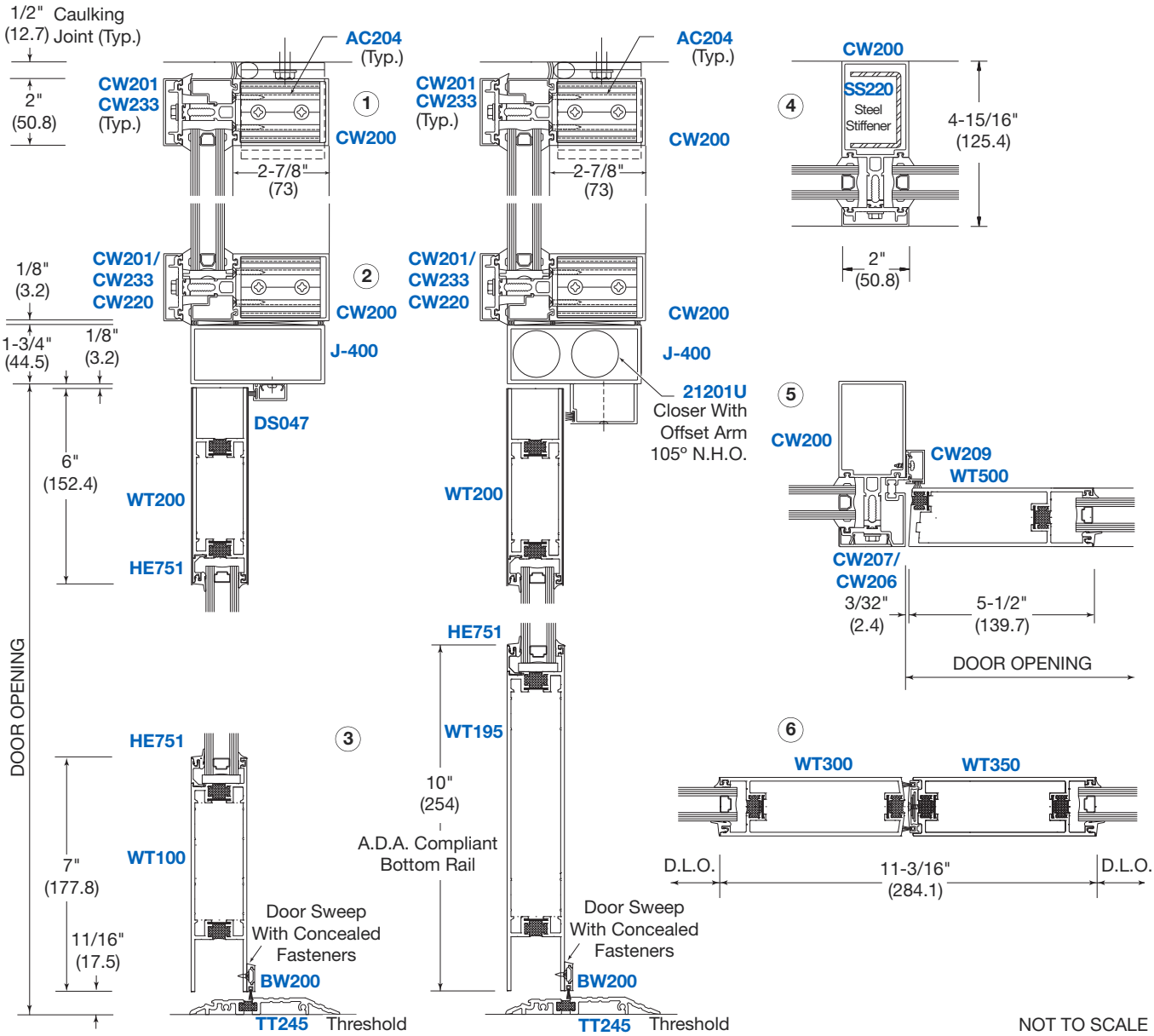

ENTRANCES

Door Corner Construction

Thermal Doors
- Series 400-T
- Series 550-T

The Series 400-T Medium Stile is constructed with a Polyamide Nylon Thermal Break, and the 550-T Wide Stile is constructed with a Polyurethane Polymer Thermal Break Technology. The corners are accurately joined with heavy concealed reinforced brackets, and welded.

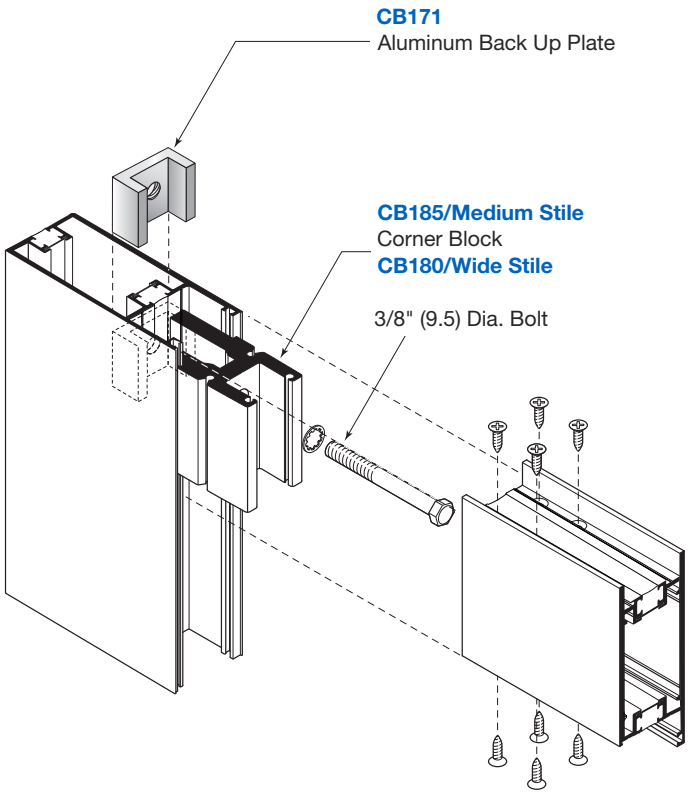

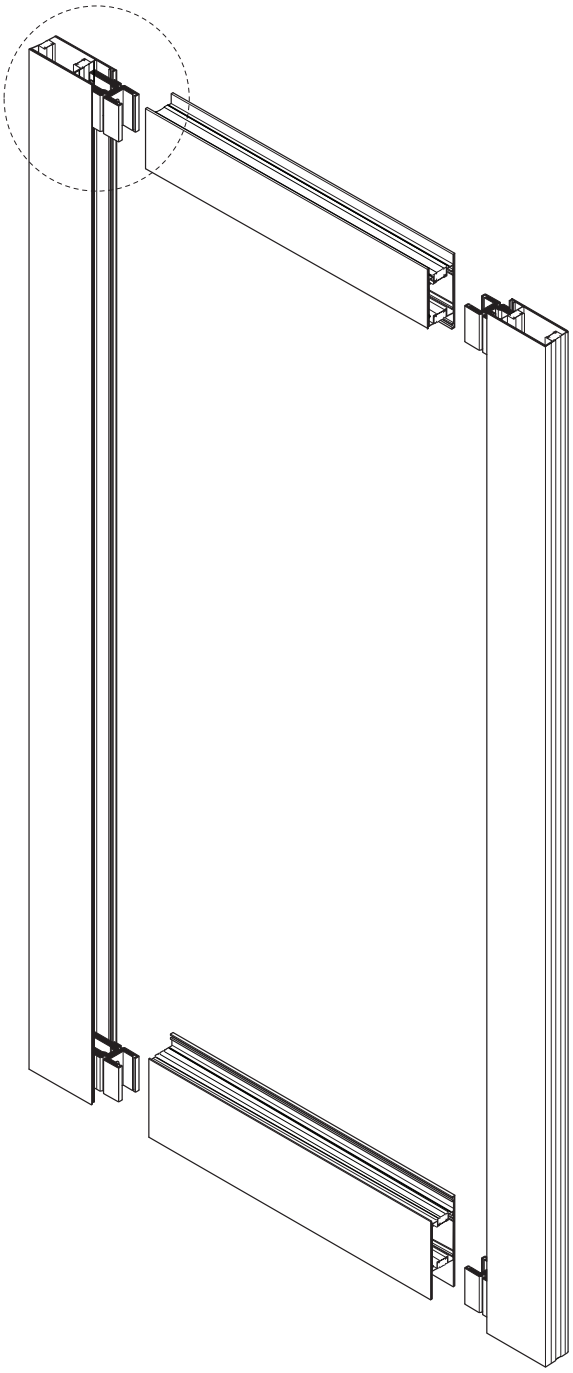

Glass Formulas for Doors With Standard and A.D.A. Bottom Rails

Thermal Doors
- Series 400-T
- Series 550-T

GLASS HEIGHT FORMULAS FOR RAIL COMBINATIONS AND SPECIAL HEIGHT DOORS

For 400-T Medium Stile Doors

EXAMPLE 1: 84" Door Opening Height with Butt Hinges or Offset Hinges and 1" (25) Glass: Standard Top Rail and 7-1/4" Bottom Rail with 1/2" Threshold.
FORMULA: 84" - [11-3/8"] = 72-5/8" Glass Height Size.

EXAMPLE 2: 84" Door Opening Height with Butt Hinges or Offset Hinges and 1" (25) Glass: Standard Top Rail and 10" A.D.A. Bottom Rail with 1/2" Threshold.
FORMULA: 84" - [14-1/4"] = 69-7/8" Glass Height Size.

For 550-T Wide Stile Doors

EXAMPLE 1: 84" Door Opening Height with Butt Hinges or Offset Hinges and 1" (25) Glass: Standard Top Rail and 7" Bottom Rail with 1/2" Threshold.
FORMULA: 84" - [12-3/4"] = 71-1/4" Glass Height Size.

EXAMPLE 2: 84" Door Opening Height with Butt Hinges or Offset Hinges and 1" (25) Glass: Standard Top Rail and 10" A.D.A. Bottom Rail with 1/2" Threshold.
FORMULA: 84" - [15-3/4"] = 68-1/4" Glass Height Size.

RAIL SIZES:

HT201	2-7/8"
HT101	4-5/16"
WT200	6"
WT100	7"
WT195	10"

DOOR CLEARANCES:

At Top Rail	1/8"
At Bottom Rail	11/16" @ 1/2" Threshold

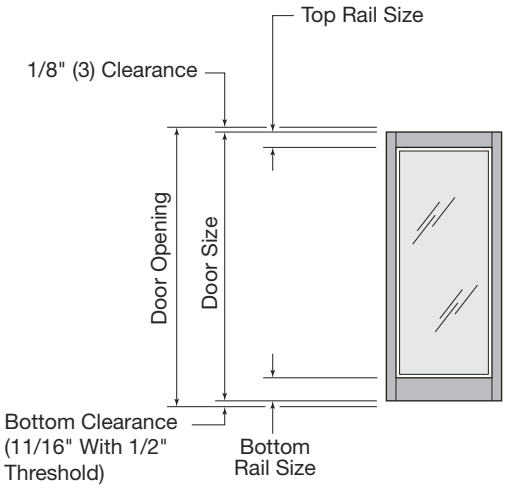

GLASS WIDTH FORMULAS

DOORS WITH BUTT HINGES OR OFFSET PIVOTS

DOOR STILE		1" (25) GLASS
Series 400-T Medium Stile	Single Door	Door Opening minus 7-3/4"
	Pair of Doors	Door Opening divided by 2, minus 7-3/4"
Series 550-T Wide Stile	Single Door	Door Opening minus 10-1/4"
	Pair of Doors	Door Opening divided by 2, minus 10-1/4"

GLASS HEIGHT FORMULAS*

DOOR STILE	1" (25) GLASS WITH STANDARD BOTTOM RAIL	1" (25) GLASS WITH 10" A.D.A. BOTTOM RAIL
Series 400-T Medium Stile	Door Opening Minus 11-3/8"	Door Opening Minus 14-1/4"
Series 550-T Wide Stile	Door Opening Minus 12-3/4"	Door Opening Minus 15-3/4"

* Including 1/2" Threshold

ENTRANCES

Custom Door Quote/Order Request Form

PAGE 1 OF 2

Fax Completed Checklist to U.S. Aluminum Technical Sales at (866) 262-3299. Then call to discuss: (800) 262-5151 (U.S.), (877) 421-6144 (Canada), or (323) 588-1281 (International). Ask for Extension 5305. This form is also available online at **usalum.com**.

Thermal Doors
- Series 400-T
- Series 550-T

Company Name _____ Phone # _____
Contact _____ Fax # _____
Job Name _____ Date _____

When you are ready to order, utilize this form to assist you in covering the details required to complete a Custom Door Entrance installation. Going through this exercise should prevent you from overlooking any details related to your installation.

IMPORTANT: Depending on the complexity of your project, one or more of the following may be required to accurately order: sketches or drawings of your particular application with dimensions; printed architectural drawings or CAD files; photos of job site conditions (digital images are preferable). **NOTE:** A final sign off is required prior to any custom fabrication.

DOOR STILE
- ❑ Series 400-T, Medium
- ❑ Series 550-T, Wide

DOOR FINISH
- ❑ Clear Anodized
- ❑ Dark Bronze Anodized
- ❑ Black Anodized
- ❑ Custom Duranar 70% Kynar

_____

DOOR OPENING SIZE
- ❑ 36" x 84" (914 x 2134)
- ❑ 42" x 84" (1067 x 2134)
- ❑ 72" x 84" (1829 x 2134)
- ❑ Custom

_____

DOOR GLASS (BY OTHERS)
- ❑ With 1" (25) Stops

DOOR SWEEP
- ❑ Yes ❑ No
- ❑ Exposed Fasteners
- ❑ Concealed Fasteners

DOOR SWING CHART

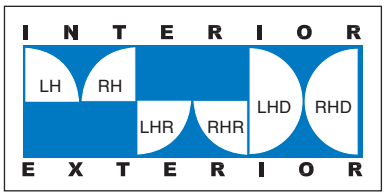

Use the Door Swing Chart to determine how the door(s) should be handed.

DOOR SWING

	QTY
❑ LH Hinge Left Swing In	____ ea.
❑ RH Hinge Right Swing In	____ ea.
❑ LHR Hinge Left Swing Out	____ ea.
❑ RHR Hinge Right Swing Out	____ ea.
❑ LHD Hinge Left Double Acting	____ ea.
❑ RHD Hinge Right Double Acting	____ ea.
❑ PAIR Swing In	____ ea.
❑ PAIR Swing Out	____ ea.
❑ PAIR Double Acting	____ ea.

CONCEALED WEATHERSTRIP
- ❑ Top Rail
- ❑ Bottom Rail
- ❑ Both

BOTTOM RAIL
- ❑ Standard
- ❑ A.D.A. 10" (254) Rail
- ❑ Custom

_____

PUSH/PULL HARDWARE
- ❑ Standard Push Bars
- ❑ Standard Push/Pull
- ❑ Offset Pulls
- ❑ None (Supplied by Others)

DOOR HINGING
- ❑ Top/Bottom Offset Pivots
- ❑ 1 Pair Butt Hinges
- ❑ Intermediate Pivots
  Add ____ per Door
- ❑ Intermediate Butt Hinges
  Add ____ per Door

Custom Door Quote/Order Request Form

Thermal Doors
- Series 400-T
- Series 550-T

PAGE 2 OF 2

PANIC DEVICES
- ❑ Rim Panic With Crashbar
- ❑ Concealed Panic With Crashbar
- ❑ Rim Panic With Push Pad
- ❑ Concealed Panic With Push Pad
- ❑ CRL-Blumcraft Panic
- ❑ Removable Mullion
- ❑ Custom

_____

DOOR HARDWARE FINISH
- ❑ Clear Anodized
- ❑ Bronze Anodized
- ❑ Champagne Anodized
- ❑ Other (Specify)

_____

THRESHOLD
- ❑ None
- ❑ Standard
- ❑ Custom

_____

DOOR CLOSER
- ❑ O.H. Concealed (Double Acting)
- ❑ O.H. Concealed (Offset)
- ❑ 90°
- ❑ 105°
  Hold Open ❑ Yes ❑ No
- ❑ Surface Mount
- ❑ Drop Plate
- ❑ Door Stop
- ❑ No Closer Required

LOCKING OPTIONS
- ❑ MS Deadbolt With Two Cylinders
- ❑ Thumbturn in Lieu of Cylinder
- ❑ 3-Point Locking @ Pair
- ❑ Lock Indicator
- ❑ Cylinder Guard
- ❑ Flushbolts
- ❑ A.R. Latch/Deadlock
- ❑ A.R. Hook Throw Deadlock
- ❑ Paddle Handle
- ❑ A.R. Lever Handle
- ❑ CRL Lever Handle
- ❑ Electric Strike
- ❑ No Locking Hardware

LAYOUT GRID TO SKETCH DESIGN

ENTRANCES

Table of Contents

Balanced Doors
- **Balancer™ Series**
- **Premium Series**

SECTION H5 **PAGE**

SPECIAL FEATURES ..... 02-H5 thru 04-H5
SPECIFICATIONS 05-H5
TECHNICAL DATA ..... 06-H5 and 07-H5
TYPICAL DETAILS ..... 08-H5 and 09-H5

Project: Corporate Building Entrance, Los Angeles, CA

Due to the diversity in state/provincial, local, and federal laws and codes that govern the design and application of architectural products, it is the responsibility of the individual architect, owner, and installer to ensure that products selected for use on projects comply with all applicable building codes and laws. U.S. Aluminum exercises no control over the use or application of its products, glazing materials, and operating hardware, and assumes no responsibility thereof.

The rapidly changing technology within the architectural aluminum products industry demands that U.S. Aluminum reserve the right to revise, discontinue or change any product line, specification or electronic media without prior written notice.

NOTE: Dimensions in parentheses ( ) are millimeters unless otherwise noted.
Other metric units shown in this publication are:

m - meter	Kg - kilogram
Pa - pascal	KPa - kilopascal
MPa - megapascal	

ENTRANCES

Special Features

Balanced Doors
- Balancer™ Series
- Premium Series

BALANCED DOORS AND ENTRANCES

- Neutralizes Wind and Stack Pressure for Easy Operation
- Requires Less Operating Space Than Conventionally Hinged Doors
- Two Styles Available; Concealed Vertical Tube and Exposed Vertical Tube
- "Barrier Free Door"; Meets A.D.A. Requirements Without Power Operators
- Available for Curtain Wall and Storefront Systems
- Custom Engineered and Fabricated Systems With Over 40 Years of Proven Performance
- Manufactured to Withstand the Most Demanding Design Requirements
- Provides Strength and Durability Throughout Years of Heavy Use
- Fast Turn-Around Times
- For Doors Weighing Up to 700 Pounds (318 kg)
- Automatic Operators Available With Premium Series Only
- 10 Year Warranty

U.S. Aluminum introduces the latest edition to our extensive Architectural Hardware line, Balanced Doors. We now offer a complete line of Balanced Doors utilizing the high performance hardware as designed by Wikk Industries, a leading manufacturer of Balanced Doors for over 40 years.

Our new line of Balanced Doors and Entrances offers a variety of options that fit within everyone's budget. All are available in a wide variety of styles and finishes, as well as custom finishes to meet your every need.

Balanced Door Hardware, combined with our Door Line, allows us to offer you endless possibilities in design, finish, and functionality. We have applied our strict manufacturing standards, which you have come to know and trust over the years, to the Wikk Balanced Door and Hardware line to ensure the high quality, performance, and durability of the Wikk product continues. Keeping our commitment to customer service, we offer complete engineering and design services, as well as the best lead times in the industry.

The Premium Series Balanced Doors are also available with an automatic operator. This is a Standard Balanced Door during manual operation, and automated with power only when required, accomplished using a concealed low energy Stanley Magic-Force™ Motorized Operator.

For additional information, contact U.S. Aluminum Technical Sales at (800) 262-5151 in the U.S. and Canada, or (323) 268-4230 International. Ask for Ext. 5305. You can e-mail us through our web site at **usalum.com**.

ENTRANCES

Special Features

Balanced Doors
- Balancer™ Series
- Premium Series

WHAT IS A BALANCED DOOR?

In a Balanced Door the door panel rotates around a rolling pivot in an elliptical path to provide the widest possible opening with the smallest swing arc (see diagram below). This design neutralizes two naturally occurring pressures, atmospheric (wind) and interior stack pressure, allowing effortless opening and positive closing. Balanced Doors are typically required when a commercial project has a monumental entrance, requiring an oversized, heavy door. The 'balanced' principle permits the use of these monumental doors where ordinary closer mechanisms would fail to offer adequate control.

LET STACK PRESSURES WORK FOR YOU

HEATING SEASON
Building air lighter than outside air

Negative inside pressure makes conventionally hinged doors hard to open

COOLING SEASON
Building air heavier than outside air

Strong tension required to hold some doors closed against positive Building pressure

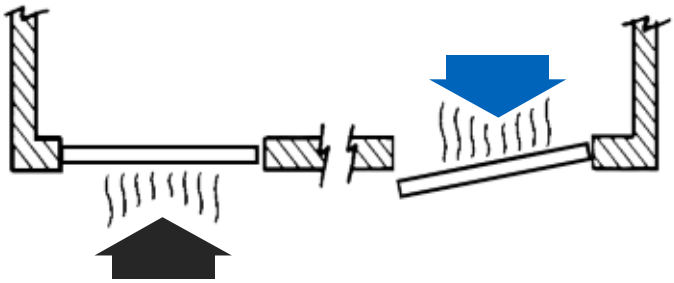

BALANCED DOOR DESIGN OFFERS MANY ADVANTAGES

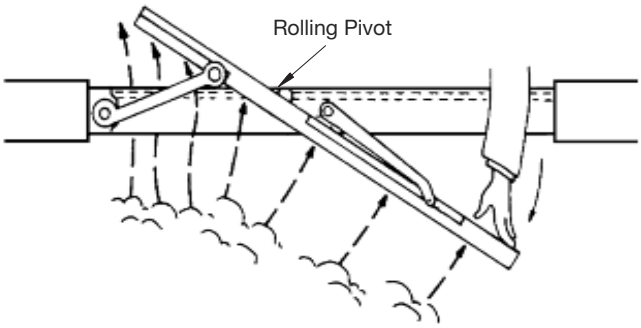

When our Balanced Doors open, approximately two thirds of the door swings outward while one third swings inward, allowing wind or stack pressure to assist rather than hinder the operation of the door. Air pressure balances itself out around the rolling pivot, so less force is needed to operate the door.

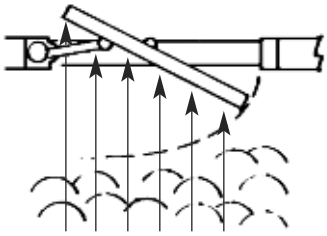

Balanced Door

WIND	BALANCED DOOR WITH 5 LBS. SPRING PRESSURE	REGULAR DOOR WITH 5 LBS. SPRING PRESSURE
m.p.h.	lbs. pressure to open	lbs. pressure to open
10	1 + 5 = 6 lbs.	3 + 5 = 8 lbs.
20	3 + 5 = 8 lbs.	11 + 5 = 16 lbs.
30	7 + 5 = 12 lbs.	26 + 5 = 31 lbs.
40	13 + 5 = 18 lbs.	47 + 5 = 52 lbs.
50	21 + 5 = 26 lbs.	73 + 5 = 78 lbs.
60	30 + 5 = 35 lbs.	105 + 5 = 110 lbs.

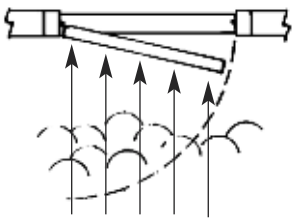

Regular Door

ENTRANCES

Special Features

Balanced Doors
- Balancer™ Series
- Premium Series

ADVANTAGES OF BALANCED DOORS BY U.S. ALUMINUM

- Cost Effective Alternative to Standard Entrance Doors
- Maximum Size for Balancer™ Series is 48" Wide x 108" High (1219 x 2743)
- Maximum Size for Premium Series is 50" Wide x 120" High (1270 x 3048)
- Lets Wind and Stack Pressures Work for You Instead of Against You
- Assures Easy Operation and Positive Closing, Even Under Adverse Conditions
- Designed With Dependable LCN Hydraulic Check Connected Directly to Door
- Adjustable Hydraulic Back Check for Consistently Smooth Operation
- Latching Speed, Closing Speed, Back Check, and Spring Power are All Adjustable Without Removing Hardware or Covers
- Compact Header With Integral Guide Track
- Requires Less Operating Space Than Conventionally Hinged Doors
- Hardware is Fully Capable of Supporting and Controlling Large and Monumental Doors
- Easily Installed in New or Remodeled Buildings, Exterior or Interior
- Models Available to Work With Our Curtain Walls and Storefronts

Design Dimensions (shown in inches)

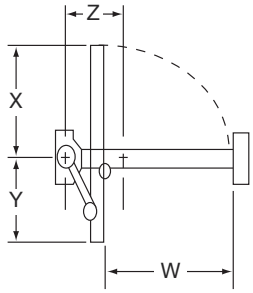

	SHORT ARM						LONG ARM				
Door Size	30"	32"	34"	36"	38"	39"	40"	42"	44"	46"	48"
W	26-11/16"	28-11/16"	30-11/16"	32-11/16"	34-11/16"	35-11/16"	36-11/16"	38-11/16"	40-11/16"	42-11/16"	44-11/16"
X	17-1/2"	19-1/2"	21-1/2"	23-1/2"	25-1/2"	26-1/2"	24"	26"	28"	30"	32"
Y	12-1/2"						16"				
Z	7-1/8"						8-7/8"				

MS390

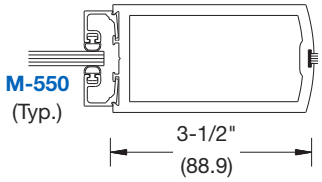

WS390

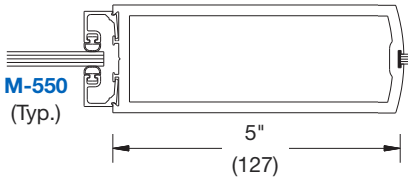

SERIES	CHOICE OF STILES	CHOICE OF TOP RAIL	BOTTOM RAIL	TRAFFIC APPLICATIONS
Balancer™	3-1/2" (88.9) 5" (127)	3-11/32" (84.9) 5-1/2" (139.7)	6-1/2" (165.1)	Extremely Heavy Traffic (Institutional Buildings, Schools, Sports Arenas)
Premium				
A.D.A. Bottom Rail Option for Either Series			9-1/2" (241.3)	A.D.A.

ENTRANCES

Specifications

SECTION 08 42 40 BALANCED DOORS

Balanced Doors
- Balancer™ Series
- Premium Series

I. GENERAL DESCRIPTION

Work Included: The glazing contractor shall furnish all necessary materials, labor and equipment for the complete installation of balanced entrance doors, door frames and hardware as detailed on the drawings and specified herein. Work Not Included: Structural support of the framing system, wood framing, structural steel, masonry, and final cleaning.

QUALITY ASSURANCE

For purposes of designating type and quality for work in this section, drawings and specifications are based on one of the following U.S. Aluminum Series Balancer™ or Premium Balanced Entrance Doors.

OPTIONAL: Door shall have A.D.A. 9-1/2" (241.3) bottom rail.

When substitute products are to be considered, supporting technical literature, samples and drawings must be submitted 10 days prior to bid date in order to make a valid comparison of the products involved.

II. PRODUCT MATERIALS

Heavy-duty, 1-7/8" (47.6) minimum door members shall be extruded aluminum 6063-T5 alloy and temper. Major portions of all door sections, except glazing beads, shall be nominal .188 inch (5) thickness. Screws, nuts, washers, bolts, rivets, and other fastening devices shall be aluminum, stainless steel or other non-corrosive materials.

DOOR CONSTRUCTION

Balancer™ Series – Customized cast iron hydraulic speed control with back checking feature is manufactured by LCN. Meets ANSI standards and is designated as a "Grade 1" speed control. Premium Series – Customized cast bronze hydraulic speed control with first and second speed adjustment. Hydraulic speed controls and other integral parts are heavy-duty and designed to allow variation in adjustments to meet this particular job with respect to door size, door weight, and varying or internal building pressures. Manual speed control or automatic operator is concealed in the head frame. The unit is removable without requiring the removal of the door, head frame or any other hardware. Heavy-duty steel tube hinge shaft is 1-3/4 inch (44) diameter with 3/16 inch (4.8) minimum wall thickness. Hinge shaft is furnished complete with integral closing force spring: adjustments are made with a cast worm gear at the floor to meet ambient wind or building pressure conditions. Hardware includes a spring-cushioned door roller bumper located in the guide channel. The operating mechanisms in the head include ball bearing pivots, manual speed control guide channel.

Guide roller is of self-aligning design with no lubrication needed. Field adjustment is possible for proper perimeter clearance of each door leaf in relation to its finished framework to accommodate on-site conditions. Manual doors have a semi-automatic hold open device located in the bottom rail. A.D.A. compliant openings: doors designated as handicapped entrances have a maximum of 8 lbs. (3.63 kg) spring tension adjustment at pull handle. The clear opening is a minimum of 32 inches (812) or greater depending on local codes. The hydraulic speed control shall be adjusted so that from an open position of 70 degrees, the door will take at least three seconds to move to a point 3 inches (76.2) from the latch, measured to the leading edge of the door (optional time delay closer is available if desired; consult factory). Arms and pivots are one-piece stainless or bronze castings or aluminum extrusions, finished as specified.

HARDWARE

Hardware for balanced doors and door frames shall be the entrance manufacturer's standard. If custom hardware is to be furnished by others, templates and physical hardware must be submitted prior to any fabrication.

OPTIONAL: Panic hardware (If required) is furnished by the door supplier.

FINISH

All exposed framing surfaces shall be free of scratches and other serious blemishes. Aluminum extrusions shall be given a caustic etch followed by an anodic oxide treatment to obtain... (*Specify one of the following*).

_____#11 Clear anodic coating
_____#22 Dark Bronze anodic coating
_____#33 Black anodic coating

A Fluoropolymer paint coating conforming with the requirements of AAMA 2605. Color shall be (*Specify a U.S. Aluminum standard color*).

For Clad Finishes – Aluminum extrusions shall be cladded over in stainless steel and/or bronze. (*Specify one of the following*).

_____Polished
_____Brushed
_____Non-Directional
_____Oil Rubbed Bronze

III. EXECUTION INSTALLATION

All items under this heading shall be set in their correct locations as shown in the details and shall be level, square, plumb, and at proper elevation and in alignment with other work in accordance with the manufacturer's installation instructions and approved shop drawings. All joints between entrance framing and the building structure shall be sealed in order to secure a watertight installation.

Upon completion of the installation of the entrances, it shall be the contractor's responsibility to make all necessary final adjustments to attain normal operation of each door and its mechanical hardware.

PROTECTION AND CLEANING

After installation the General Contractor shall adequately protect exposed portions of the balanced entrance work from damage by grinding and polishing compounds, plaster, lime, acid, cement or other contaminants. The General Contractor shall be responsible for final cleaning.

ENTRANCES

Technical Data

Balanced Doors
• Premium Series

ANATOMY OF A PREMIUM SERIES BALANCED DOOR

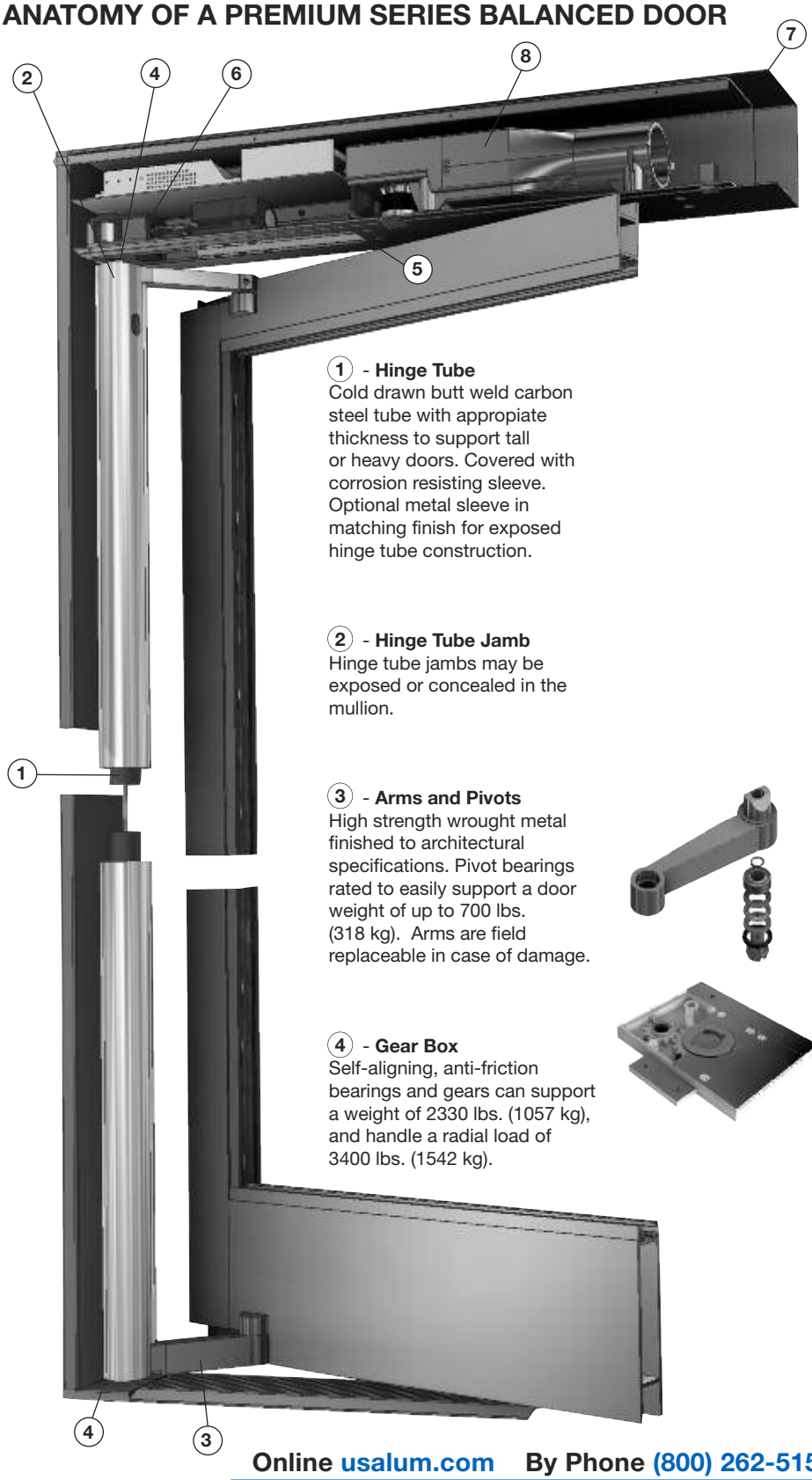

1 - Hinge Tube
Cold drawn butt weld carbon steel tube with appropiate thickness to support tall or heavy doors. Covered with corrosion resisting sleeve. Optional metal sleeve in matching finish for exposed hinge tube construction.

2 - Hinge Tube Jamb
Hinge tube jambs may be exposed or concealed in the mullion.

3 - Arms and Pivots
High strength wrought metal finished to architectural specifications. Pivot bearings rated to easily support a door weight of up to 700 lbs. (318 kg). Arms are field replaceable in case of damage.

4 - Gear Box
Self-aligning, anti-friction bearings and gears can support a weight of 2330 lbs. (1057 kg), and handle a radial load of 3400 lbs. (1542 kg).

5 - Balancing Guide Roller
Rigidly mounted, yet self aligning to overcome any misalignment between door and frame. Sturdy and maintenance free.

6 - Cast Bronze Hydraulic Check
Completely concealed in the header. Has first and second speed adjustment. Removable without requiring the removal of the door.

7 - Compact Header
Header with integral bronze guide roller track, requires only 2-3/4" x 5-1/2" (70 x 140) above door to house the Hydraulic Check.

8 Optional Stanley Magic-Force™ Motorized Operator
Heavy-duty (low energy) concealed overhead electromechanical power operator with control box, conforming to ANSI/BHMA A156.19. Motor permanent magnet, DC 3/16 HP (minimum), 1.25 AMP, 120V AC, UL listed. Adjustable slow opening speed and adjustable time delay. Requires 5-1/2" x 6" (140 x 152) header to house power operator.

ENTRANCES

Technical Data

Balanced Doors
• Balancer™ Series

ANATOMY OF A BALANCER™ SERIES BALANCED DOOR

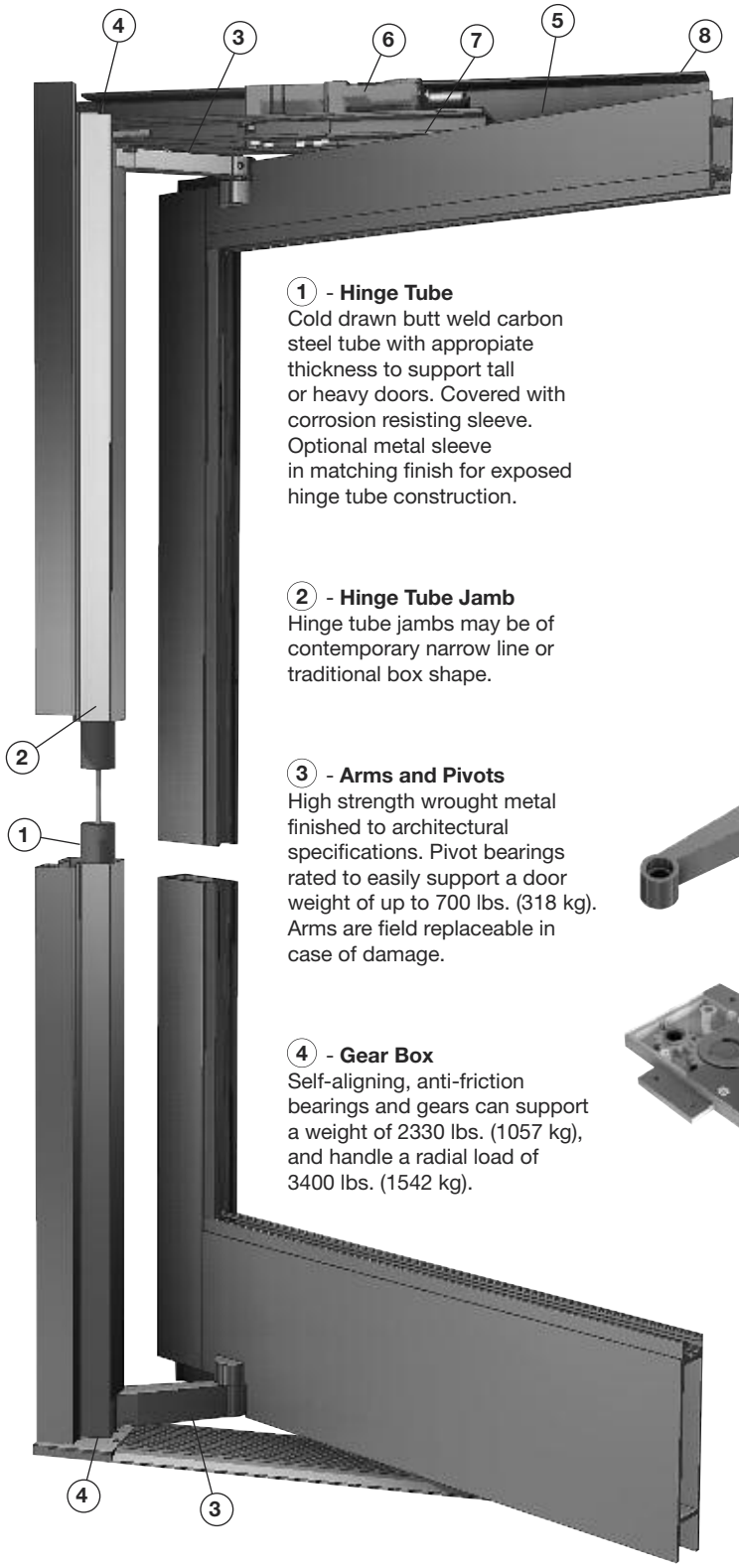

1 - Hinge Tube
Cold drawn butt weld carbon steel tube with appropiate thickness to support tall or heavy doors. Covered with corrosion resisting sleeve. Optional metal sleeve in matching finish for exposed hinge tube construction.

2 - Hinge Tube Jamb
Hinge tube jambs may be of contemporary narrow line or traditional box shape.

3 - Arms and Pivots
High strength wrought metal finished to architectural specifications. Pivot bearings rated to easily support a door weight of up to 700 lbs. (318 kg). Arms are field replaceable in case of damage.

4 - Gear Box
Self-aligning, anti-friction bearings and gears can support a weight of 2330 lbs. (1057 kg), and handle a radial load of 3400 lbs. (1542 kg).

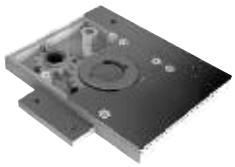

5 - Balancing Guide Roller
Rigidly mounted, yet self aligning to overcome any misalignment between door and frame. Sturdy and maintenance free.

6 - LCN Hydraulic Check
Completely concealed in the header. Dependable and easy to adjust without removing hardware or covers. A hydraulic back check cushions the limiting point of the door swing.

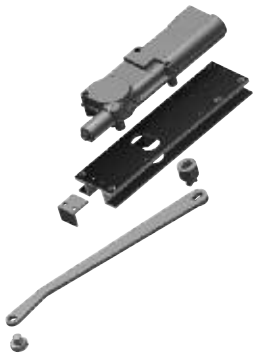

7 - Concealed Connecting Arm
Wrought metal arm connected directly to door to provide a strong, triangular positive stop at 90 degree opening and prevent stress at the header to jamb connection. Constant check control avoids abrupt rebounding of door.

8 - Compact Header
Header with integral guide roller track, requires only 2-3/4" x 4-1/2" (70 x 114) above door to house the LCN Hydraulic Check.

Typical Details

Balanced Doors
• Balancer™ Series

DOOR FRAMING

NOTE: Balancer™ Series Balanced Door Shown with 3250 Curtain Wall System with 4" (101.6) Back Member. For Premium Series Balanced Door, visit usalum.com for more information.

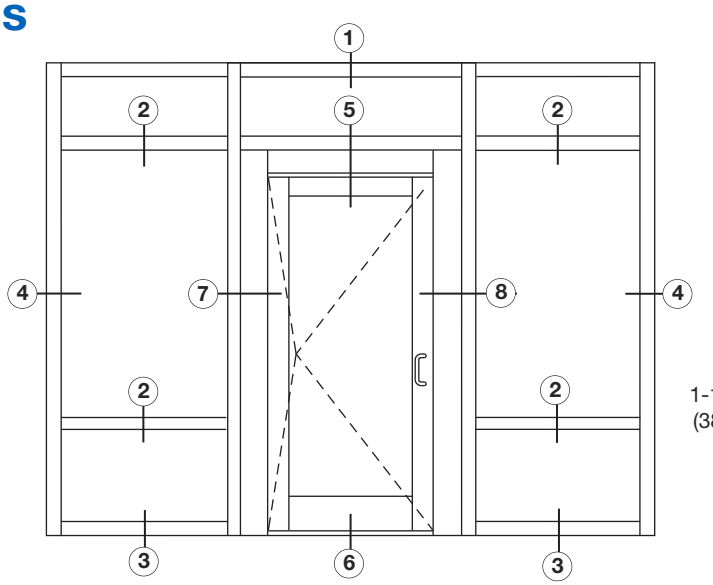

TYPICAL ELEVATION

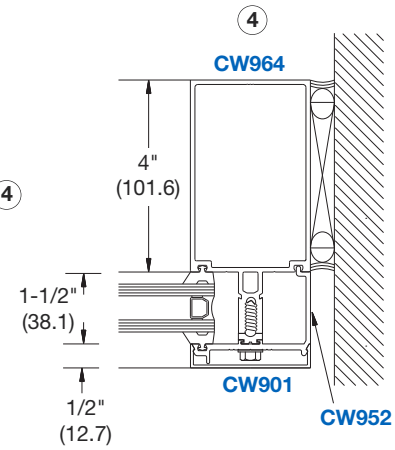

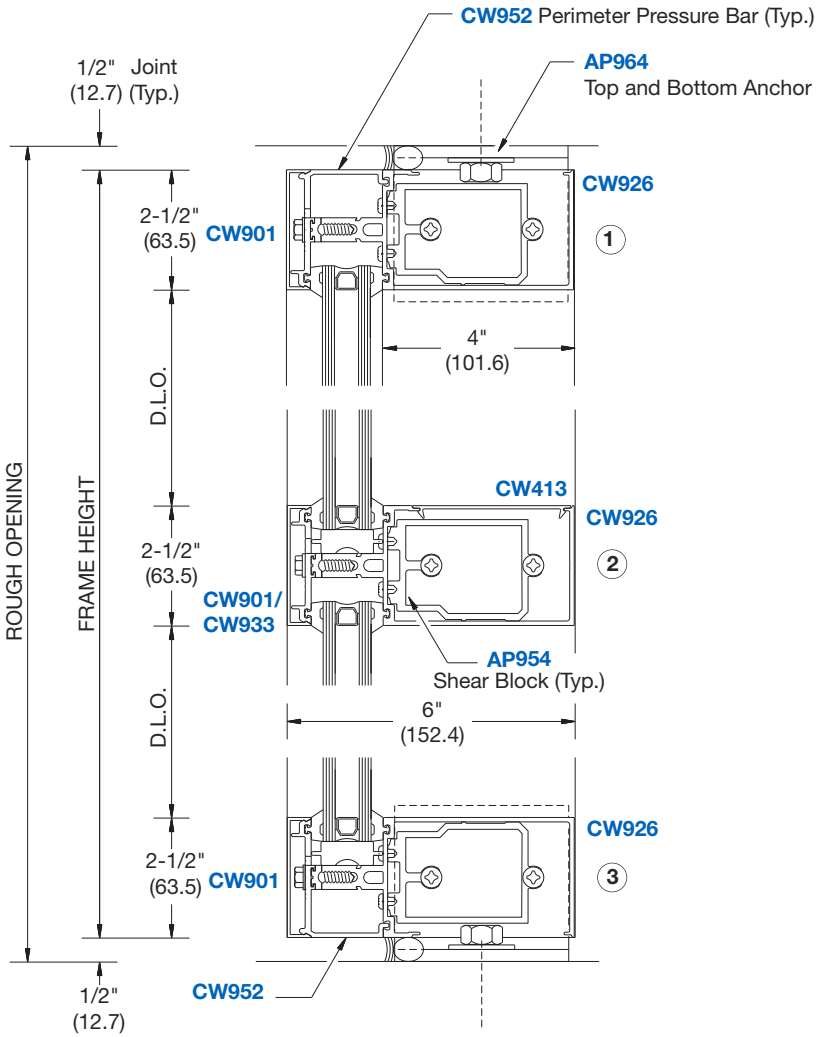

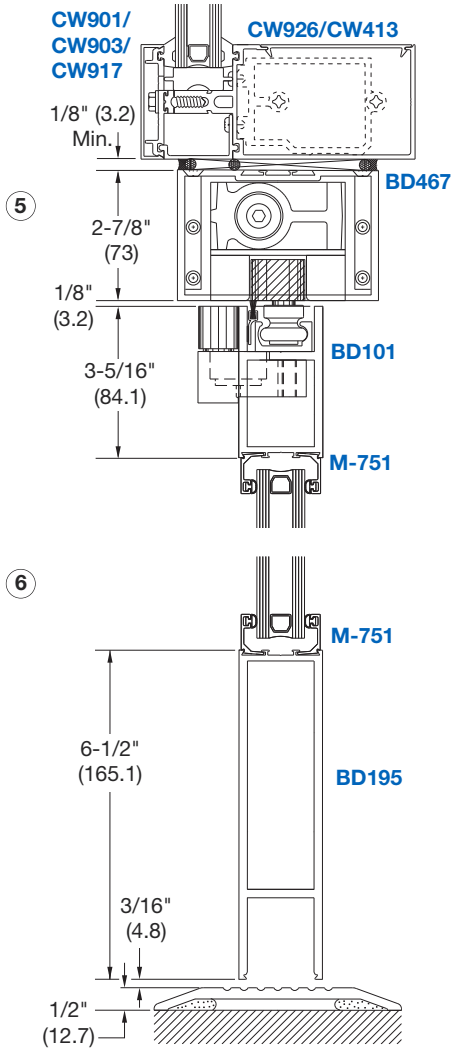

NOT TO SCALE

ENTRANCES

Typical Details

Balanced Doors
• Balancer™ Series

DOOR FRAMING

NOTE: Balancer™ Series Balanced Door Shown with 3250 Curtain Wall System with 4" (101.6) Back Member.
For Premium Series Balanced Door, visit **usalum.com** for more information.

TYPICAL CONCEALED HINGE TUBE JAMB

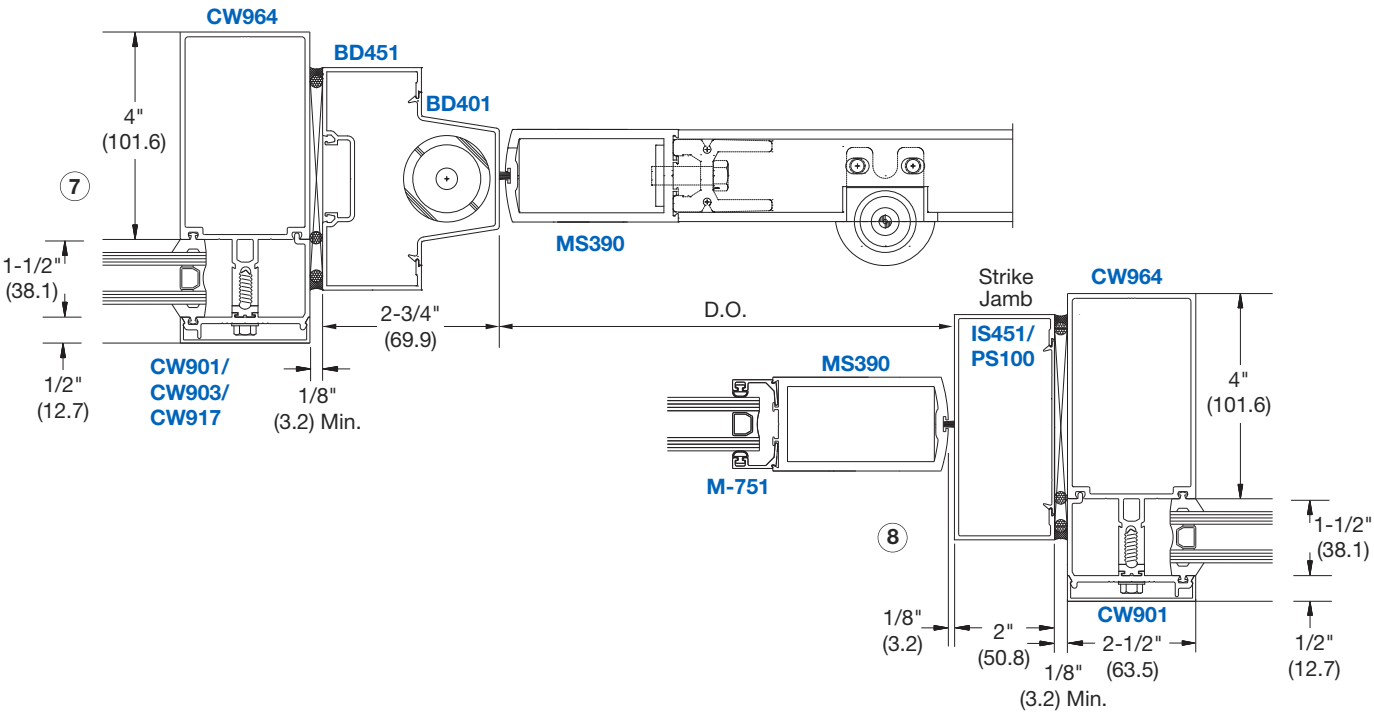

TYPICAL EXPOSED HINGE TUBE JAMB

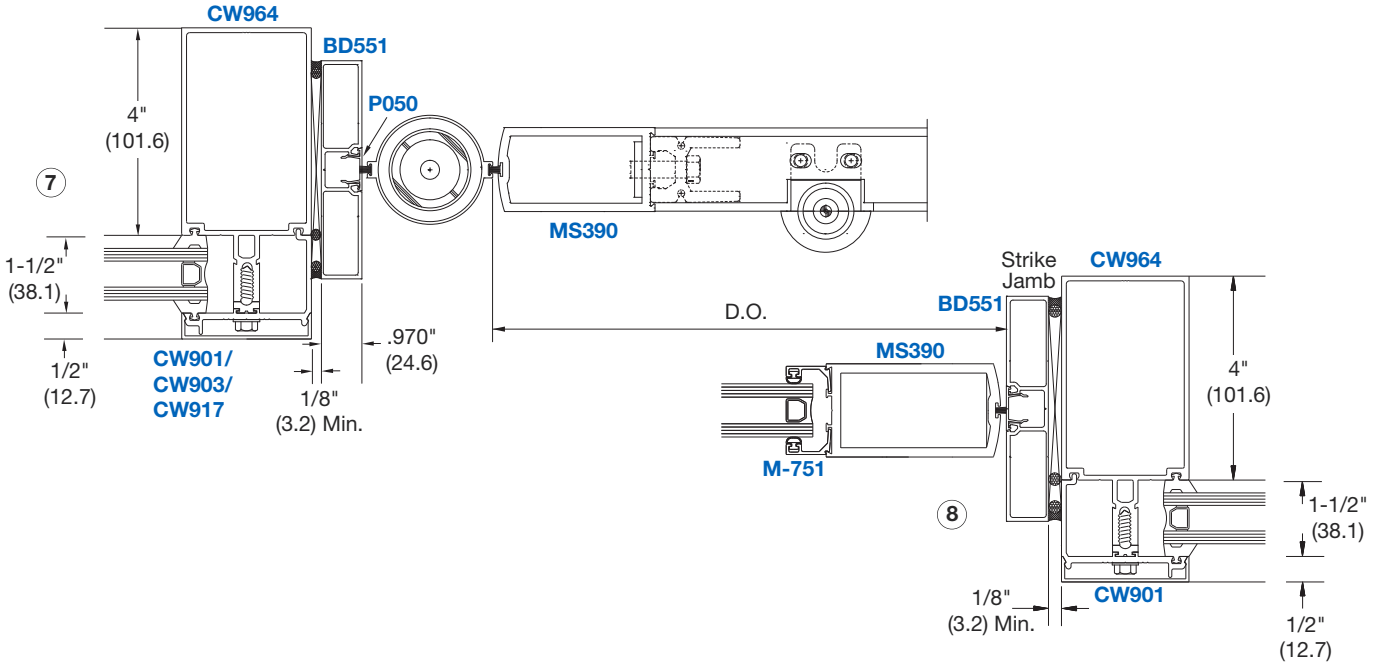

NOT TO SCALE

ENTRANCES

Table of Contents

Terrace Doors
• Series 900

SECTION H6 PAGE

SPECIFICATIONS 02-H6
TECHNICAL DATA 03-H6
TYPICAL DETAILS .....04-H6 and 05-H6
HARDWARE.....06-H6

Project: Private Condominium Complex, Los Angeles, CA

Due to the diversity in state/provincial, local, and federal laws and codes that govern the design and application of architectural products, it is the responsibility of the individual architect, owner, and installer to ensure that products selected for use on projects comply with all applicable building codes and laws. U.S. Aluminum exercises no control over the use or application of its products, glazing materials, and operating hardware, and assumes no responsibility thereof.

The rapidly changing technology within the architectural aluminum products industry demands that U.S. Aluminum reserve the right to revise, discontinue or change any product line, specification or electronic media without prior written notice.

NOTE: Dimensions in parentheses ( ) are millimeters unless otherwise noted.
Other metric units shown in this publication are:

m - meter	Kg - kilogram
Pa - pascal	KPa - kilopascal
MPa - megapascal	

ENTRANCES

Specifications

Terrace Doors • Series 900

SECTION 08 11 16 ALUMINUM DOORS AND FRAMES

I. GENERAL DESCRIPTION
Work Included: The glazing contractor shall furnish all necessary materials, labor, and equipment for the complete installation of aluminum terrace doors and framing as detailed on the drawings and specified herein.
Work Not Included: A structural support of the framing system, wood framing, structural steel, masonry, and interior trim.

QUALITY ASSURANCE
For purposes of designating type and quality for work in this section, drawings and specifications are based on U.S. Aluminum Series 900 Terrace Door. When substitute products are to be considered, supporting technical literature, samples, and drawings must be submitted 10 days prior to bid date in order to make a valid comparison of the products involved.

PERFORMANCE
Door rating shall be no less than HC40 as tested in accordance with AAMA 101/CSA-A440-05.
Air Infiltration: Out-Swing and In-Swing Doors: When closed and locked, the test specimen shall be tested in accordance with ASTM E 283 and shall not exceed 0.30cfm/sq. ft. at a test pressure differential of 6.24 psf.
Water Resistance: For Out-Swing Doors: When closed and locked, the test specimen shall be tested in accordance with ASTM E 331 and ASTM E 547. There shall be no uncontrolled leakage as defined in the test method at a static air pressure differential of 12 psf. (single and pairs) For In-Swing Doors: When closed and locked, the test specimen shall be tested in accordance with ASTM E 331 and ASTM E 547. There shall be no uncontrolled leakage as defined in the test method at a static air pressure differential of 6.24 psf. (single and pairs).
Uniform Design Load Test: When closed and locked, the test specimen shall be tested in accordance with ASTM E 330 at a minimum static air design pressure of 40 psf applied in a positive and negative direction.
Uniform Load Structural Test: When closed and locked, the test specimen shall be tested in accordance with ASTM E 330 at a minimum static air design pressure of 60 psf (one and a half times design load) applied in a positive and negative direction.
Thermal Resistance Test: When tested in accordance with AAMA 1503, the conductive thermal transmittance (U-factor) shall not be more than .59 BTU/hrs/sf/°F (Out-Swing) .60 BTU/hrs/sf/°F (In-Swing).
Condensation Resistance Test (CRF): When tested in accordance with AAMA 1503, the condensation resistance factor (CRF) shall not be less than 61 (Out-Swing Door and frame) or 63 (In-Swing Door and frame).
Acoustical Performance: When tested to AAMA Specification 1801 and in accordance with ASTM E 90 the STC (Sound Transmission Class). Rating shall be no less than 34.
Hurricane Resistance Test: For single, Out-Swing Door, the test specimen shall be tested in accordance with Miami/Dade County Protocal TAS 201, TAS 202, and TAS 203 with a 65± psf Design Load.
Testing Procedures: ASTM 283, E331, and E330 - Laboratory Performance Testing. AAMA 503-08 - Newly Installed Storefronts. AAMA 511-08 - Installed Storefront after 6 months.

II. PRODUCT MATERIALS
Door members shall be extruded architectural aluminum 6063-T5 alloy and temper. Major portions of all door sections, except glazing beads, shall be nominal .125" (3.2). Wall thickness of frame members shall be nominal .125" (3.2). Screws, nuts, washers, bolts, rivets, and other fastening devices shall be aluminum, stainless steel or other non-corrosive materials.

DOOR AND FRAME CONSTRUCTION
Door stiles, rails, and frame members shall be tubular sections joined by two polyamide glass reinforced nylon 6/6 struts mechanically crimped in raceways in exterior and interior extrusions. Door corners are to be accurately joined at corners with corner keys and crimped. The weather seals shall be open cell, urethane foam core, bonded to a U.V. stabilized polyurethane liner. Doors shall have snap-in glass stops with E.P.D.M. glazing gasket on one side, and Tremco Polyshim II glazing tape or equal on the other. No exposed screws shall be permitted except for anchoring.

HARDWARE *
Multi-point locking hardware shall be as recommended by manufacturer *(Specify finish)*. There are 3 styles available to choose from: Estate, Heritage, and Manor. Door leaves shall have 1-1/2 pairs (minimum) of mortised 4-1/4" (108) long butt hinges with non-removable stainless steel pins, painted to match door finish.
If hardware is to be furnished by others, templates and physical hardware must be submitted prior to any fabrication being started.

FINISH
All exposed framing surfaces shall be free of scratches and other serious blemishes. Aluminum extrusions shall be given a caustic etch followed by an anodic oxide treatment to obtain...
(Specify one of the following):
_____#11 Clear anodic coating
_____#22 Dark Bronze anodic coating
_____#33 Black anodic coating

A Fluoropolymer paint coating conforming with the requirements of AAMA 2605. Color shall be: *(Specify a U.S. Aluminum standard color)*.

III. EXECUTION INSTALLATION
All items under this heading shall be set in their correct locations as shown in the details and shall be level, square, plumb, and at proper elevation and in alignment with other work in accordance with the manufacturer's installation instructions and approved shop drawings. All joints between entrance framing and the building structure shall be sealed in order to secure a watertight installation.

PROTECTION AND CLEANING
After installation the General Contractor shall adequately protect exposed portions of the aluminum entrance work from damage by grinding and polishing compounds, plaster, lime, acid, cement or other contaminants. The General Contractor shall be responsible for final cleaning.

* Performance criteria is based on standard hardware configurations as supplied by U.S. Aluminum.

ENTRANCES

Technical Data

Terrace Doors
• Series 900

The Series 900 is a High Performance Terrace Door for use in condominiums, lofts, hotels, and high-rise apartments with all the benefits you are looking for in a French Door look. The Series 900 Terrace Door will withstand heavy traffic and the worst of weather conditions while maintaining it's elegant styling. The 2-1/4" (57.2) thick door with a 1" x 4-1/2" (25 x 114.3) frame features double polyamide glass strips providing superior interior to exterior thermal separation. For maximum security, the Series 900 Terrace Door includes a Seven-Point Locking Device for pairs and Five-Point Device for singles. Three each, Five Knuckle Butt Hinges with non-removable stainless steel pins per leaf complete the sturdy look and feel of the Series 900 Terrace Door. For information about our Hurricane Resistant Balcony/Terrace Doors please see pages 01-M3 thru 05-M3.

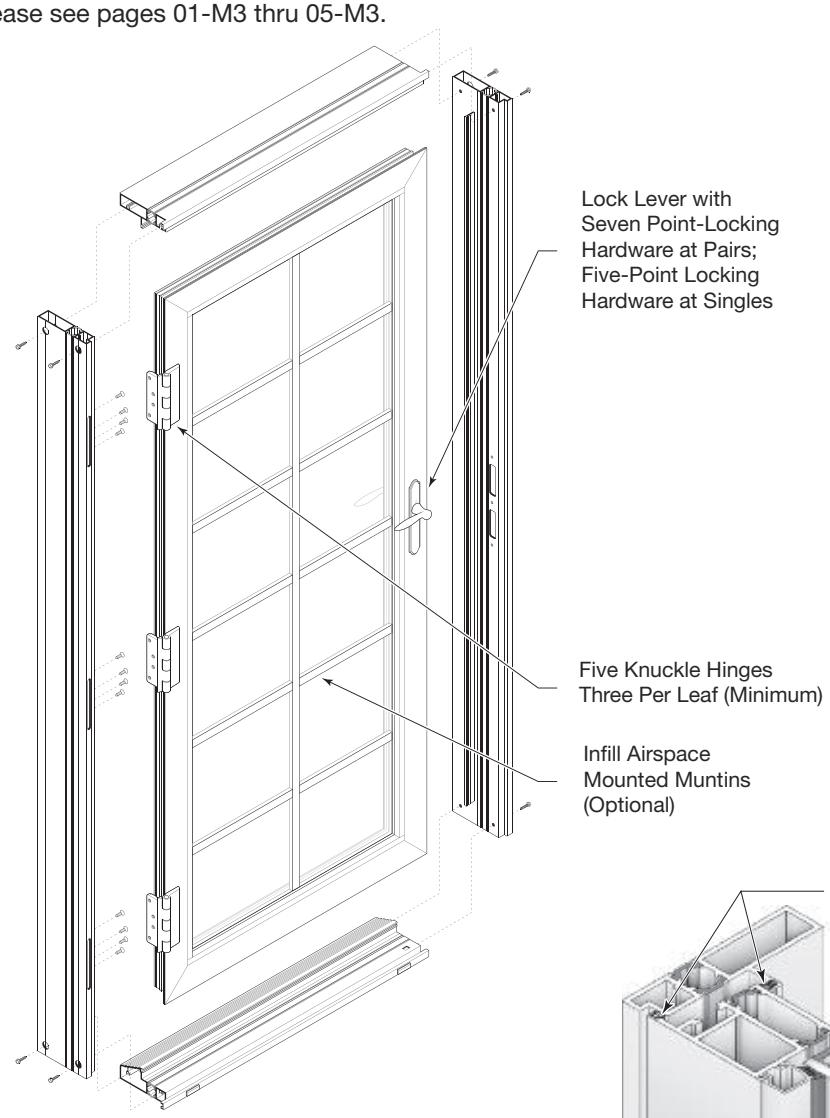

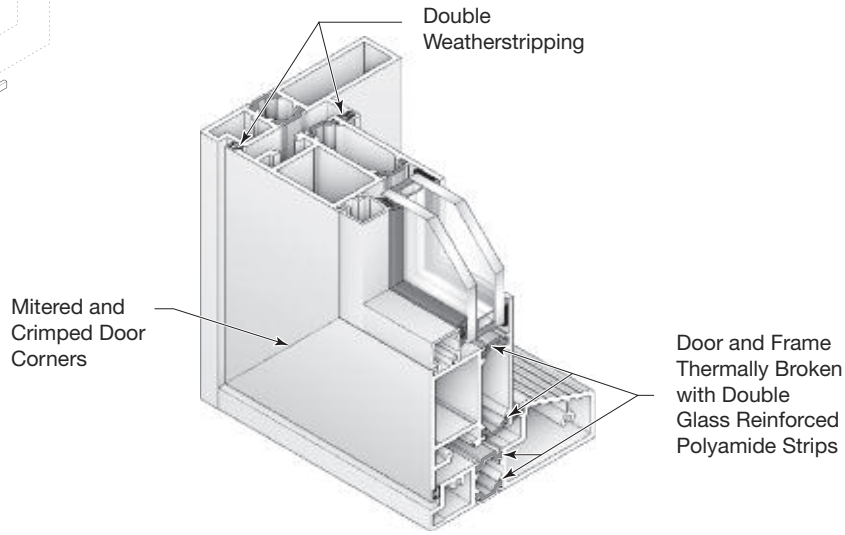

ENTRANCES

Typical Details

Terrace Doors
• Series 900

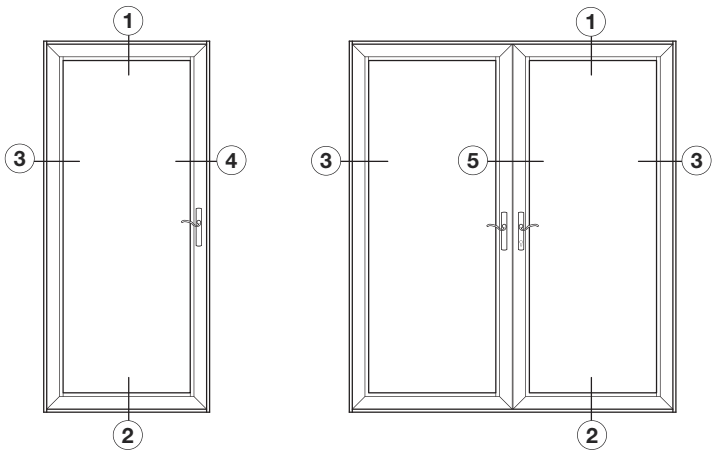

OUT-SWING DOOR ELEVATIONS

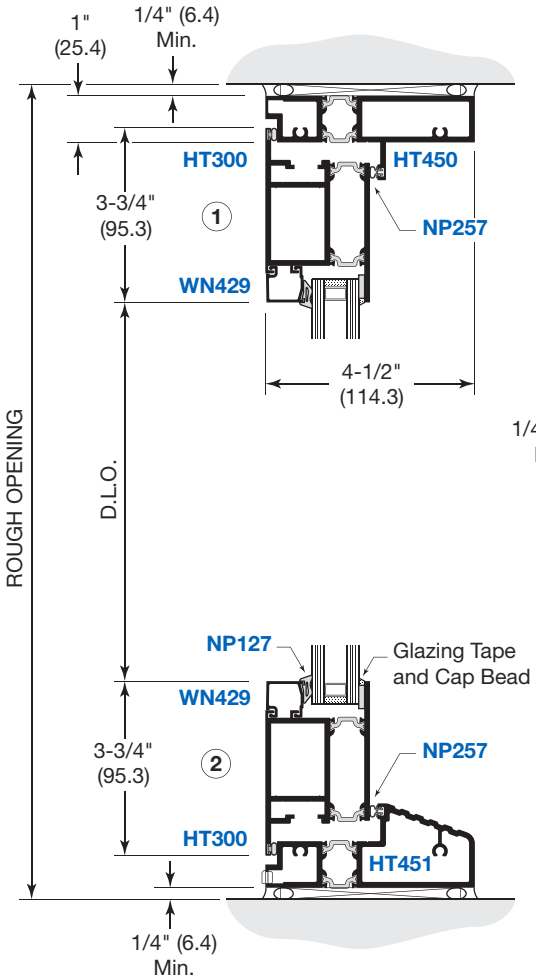

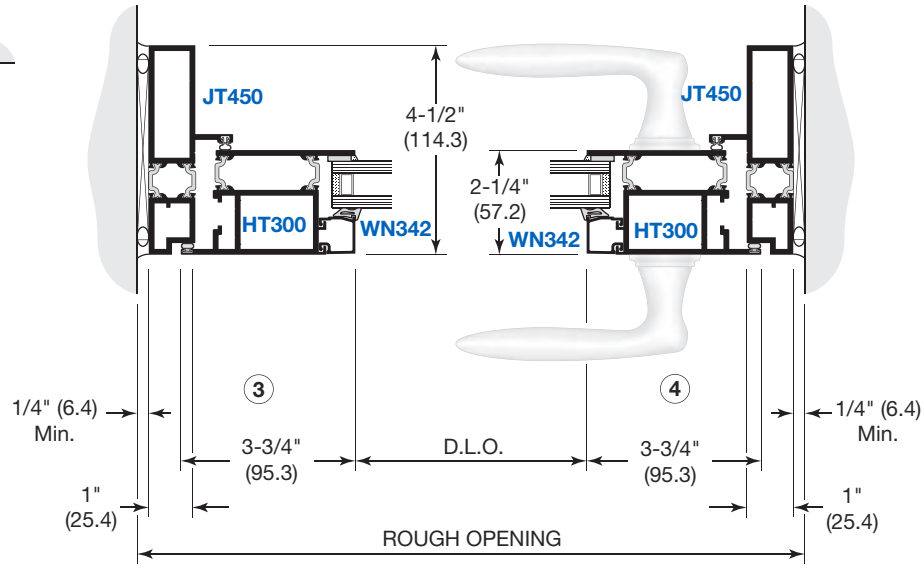

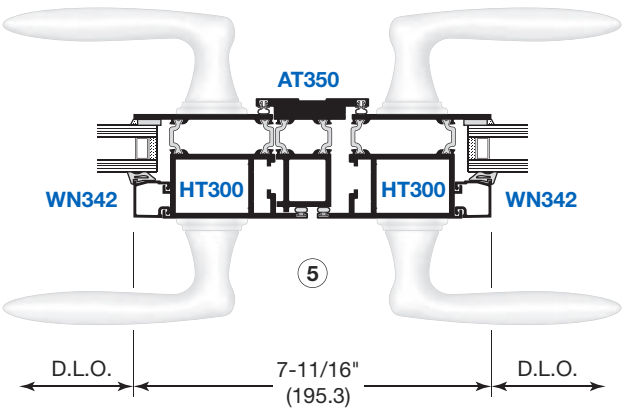

NOT TO SCALE

ENTRANCES

Typical Details

Terrace Doors
• Series 900

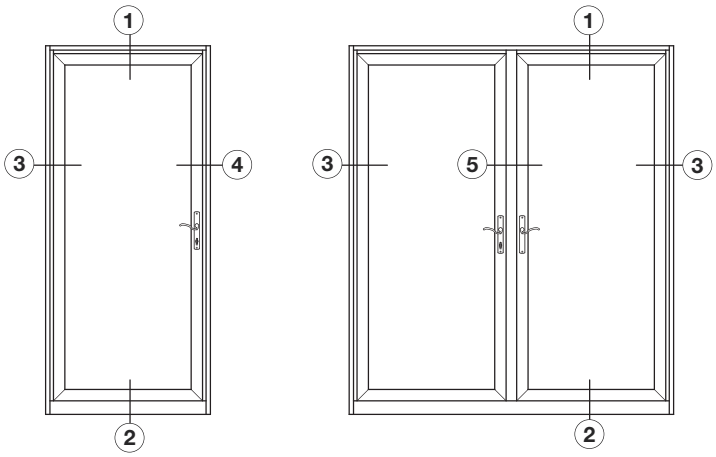

IN-SWING DOOR ELEVATIONS

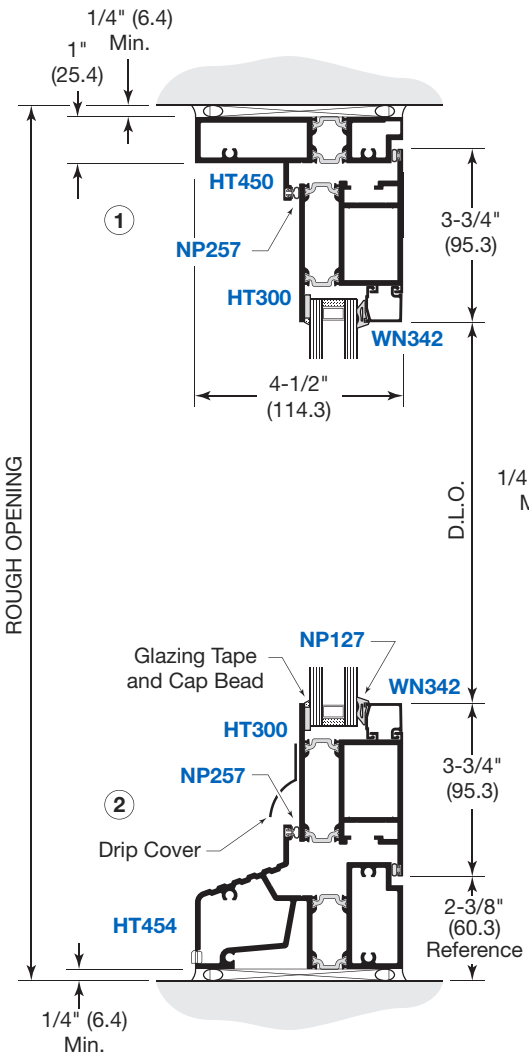

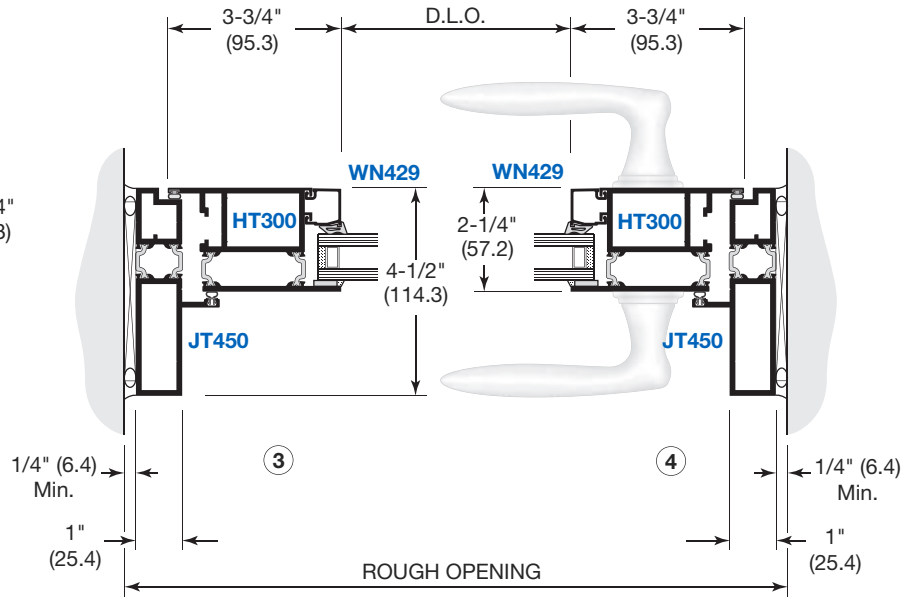

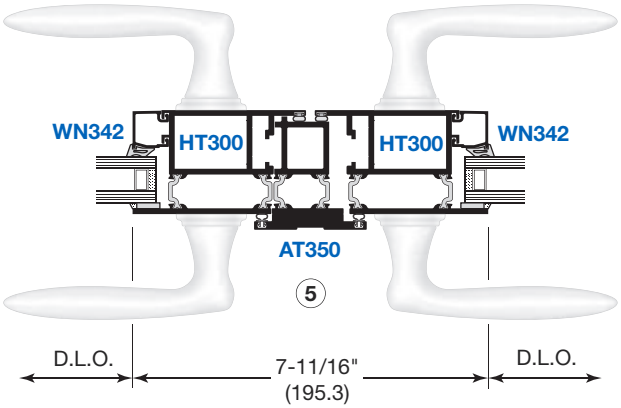

NOT TO SCALE

ENTRANCES

Hardware

Terrace Doors
• Series 900

LEVER HANDLE OPTIONS

MANOR

HERITAGE

ESTATE

FINISH OPTIONS

Style	Polished Brass	Antique Brass	Polished Chrome	Satin Nickel	Antique Nickel	Polished Chrome	Oil Rubbed	Rustic Umber	White	Matte Black	Polished Chrome/ Brushed Stainless	Polished Brass/ Brushed Brass
MANOR	●	●	●	●	●	●	●	●	●	●		
HERITAGE	●			●							●	●
ESTATE	●	●	●	●	●	●	●	●	●	●		

CYLINDER OPTIONS

EXTERIOR	INTERIOR
None	None
None	Thumb Turn
None	Keyed
Keyed	None
Keyed	Thumb Turn
Keyed	Keyed

Please specify when ordering.

Key Cylinder

Thumb Turn

Table of Contents

Sliding Doors
• Series 2000

SECTION H7 PAGE

SPECIFICATIONS 02-H7
TECHNICAL DATA 03-H7
TYPICAL DETAILS.....04-H7 thru 08-H7

Project: Furniture Mart, Los Angeles, CA

Due to the diversity in state/provincial, local, and federal laws and codes that govern the design and application of architectural products, it is the responsibility of the individual architect, owner, and installer to ensure that products selected for use on projects comply with all applicable building codes and laws. U.S. Aluminum exercises no control over the use or application of its products, glazing materials, and operating hardware, and assumes no responsibility thereof.

The rapidly changing technology within the architectural aluminum products industry demands that U.S. Aluminum reserve the right to revise, discontinue or change any product line, specification or electronic media without prior written notice.

NOTE: Dimensions in parentheses ( ) are millimeters unless otherwise noted.
Other metric units shown in this publication are:

m - meter	Kg - kilogram
Pa - pascal	KPa - kilopascal
MPa - megapascal	

ENTRANCES

Specifications

08 32 13 SLIDING GLASS DOORS

Sliding Doors
• Series 2000

SERIES	STILES	TOP RAIL	BOTTOM RAIL	INTERIOR APPLICATIONS ONLY	GLAZING INFILL
2000	2-1/16" (52.4)	2-1/8" (54)	3-3/16" (81)	Shopping Malls and Auto Dealerships	1/4" (6) or 1" (25)

I. GENERAL DESCRIPTION

Work Included: The glazing contractor shall furnish all necessary materials, labor, and equipment for the complete installation of aluminum sliding doors as detailed on the drawings and specified herein.
Work Not Included: Structural support of the framing system, wood framing, structural steel, masonry and final cleaning.

QUALITY ASSURANCE

For purposes of designating type and quality for work in this section, drawings and specifications are based on U.S. Aluminum Series 2000 Sliding Doors. When substitute products are to be considered, supporting technical literature, samples and drawings must be submitted 10 days prior to bid date in order to make a valid comparison of the products involved.

PERFORMANCE REQUIREMENTS

Series 2000 Sliding Doors are designed for interior application only.

II. PRODUCT MATERIALS

Door and frame members shall be extruded architectural aluminum 6063-T5 alloy and temper. Major portion of all door sections, except glazing beads, shall be nominal .125" (3.2). Wall thickness of frame members shall be nominal .093" (2.4). Screws, nuts, washers, bolts, rivets, and other fastening devices shall be aluminum, stainless steel or other non-corrosive materials. Sliding door floor track shall have stainless steel cover cap. Perimeter fasteners shall be aluminum or steel providing that the steel is properly isolated from the aluminum.

DOOR CONSTRUCTION

Fixed and sliding panels shall be 1-3/4" (44.5) deep. Stiles and rails shall be tubular sections, accurately joined at corners with heavy concealed reinforcement brackets secured with bolts and screws. Doors shall have snap-in stops with E.P.D.M. glazing gaskets on both sides of glass. No exposed screws shall be permitted.
A hard-backed poly-pile weather-strip shall be installed in interlockers and meeting stiles of bi-parting doors.
Sliding panels shall be equipped with two tandem ball bearing rollers, each capable of supporting 250 pounds (113.4 Kg) of moving weight.

HARDWARE

Hardware for Series 2000 Sliding Doors shall be the manufacturer's standard: Maximum Security hookbolt lock with two three-pin cylinders, flush finger pulls, and adjustable tandem steel rollers.
If custom hardware is to be furnished by others, templates and physical hardware must be submitted prior to any fabrication.

FINISH

All exposed framing surfaces shall be free of scratches and other serious blemishes. Aluminum extrusions shall be given a caustic etch followed by an anodic oxide treatment to obtain...
(*Specify one of the following*):
_____#11 Clear anodic coating
_____#22 Dark Bronze anodic coating
_____#33 Black anodic coating
A Fluoropolymer paint coating conforming with the requirements of AAMA 2605. Color shall be (*Specify a U.S. Aluminum standard color*).

III. EXECUTION INSTALLATION

All items under this heading shall be set in their correct locations as shown in the details and shall be level, square, plumb, and at proper elevation and in alignment with other work in accordance with the manufacturer's installation instructions and approved shop drawings. Upon completion of the installation of the entrances, it shall be the contractor's responsibility to make all necessary final adjustments to attain normal operation of each door and its mechanical hardware.

PROTECTION AND CLEANING

After installation the General Contractor shall adequately protect exposed portions of the aluminum entrance work from damage by grinding and polishing compounds, plaster, lime, acid, cement or other contaminants. The General Contractor shall be responsible for final cleaning.

ENTRANCES

Technical Data

Sliding Doors
• Series 2000

The Series 2000 Sliding Door is a multi-track entrance designed for interior applications only. This multi-track slider is engineered with stacking head channels and bottom tracks allowing multi-slider combinations. Rugged overall construction coupled with heavy wall stiles and interlocks create a truly monumental sliding unit. Doors are equipped with flush finger pulls, hooklocks, and lock cylinders. Adjustable tandem rollers and floor track with stainless steel caps ensure smooth operation and durability.

Various combinations of sliding and pocket door panels can accommodate many design plans. Floor tracks can be installed, recessed or surface applied. Each sliding door has two tandem steel rollers to provide smooth operation and years of service.

NOTE: An intermediate horizontal muntin should be installed in panels with perimeters exceeding 288" (7.3 m).

SERIES	STILES	TOP RAIL	BOTTOM RAIL	INTERIOR APPLICATIONS ONLY
2000 Sliding Door	2-1/16" (52.4)	2-1/8" (54)	3-3/16" (81)	Shopping Malls, Office Partitions, Auto Dealerships

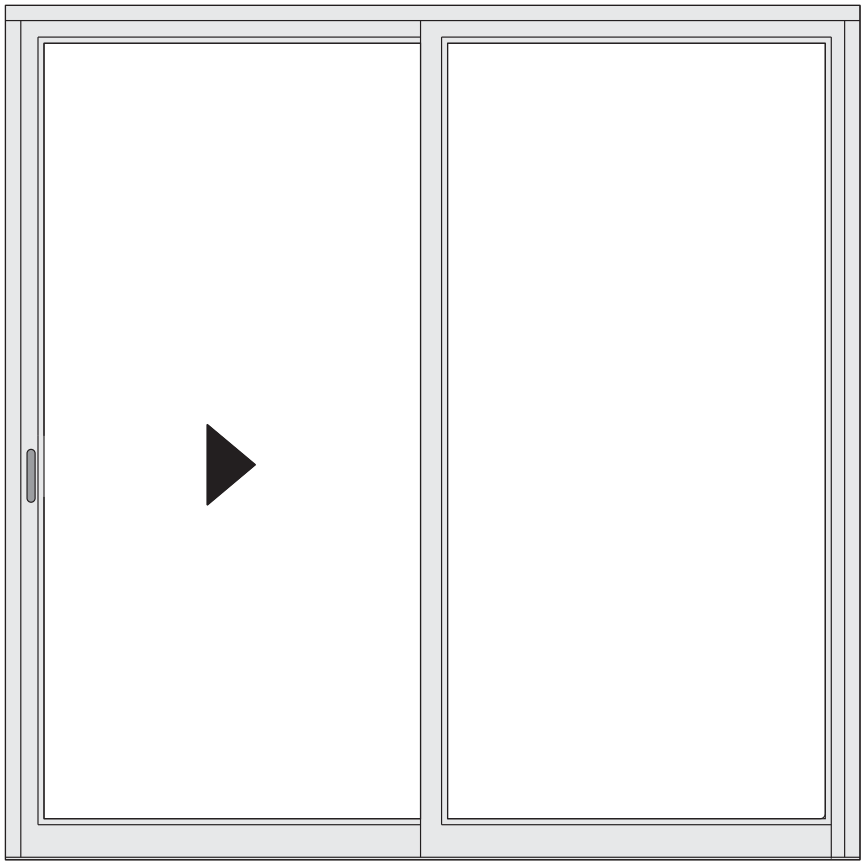

TYPE XO
(As Viewed from Exterior)

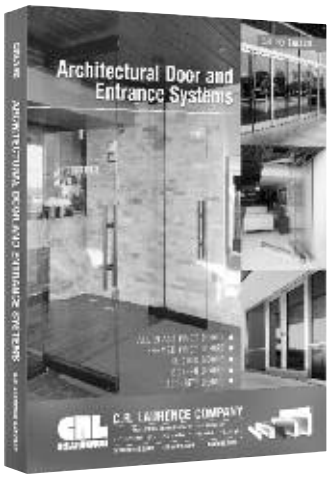

See our CRL14D Catalog for our complete selection of sliding and stacking heavy glass door systems for commercial and residential use. All are designed to be attractive, easy to operate, and most of all safe, even in high traffic circumstances. For more information go to **crlaurence.com**.

ENTRANCES

Typical Details

Sliding Doors
• Series 2000

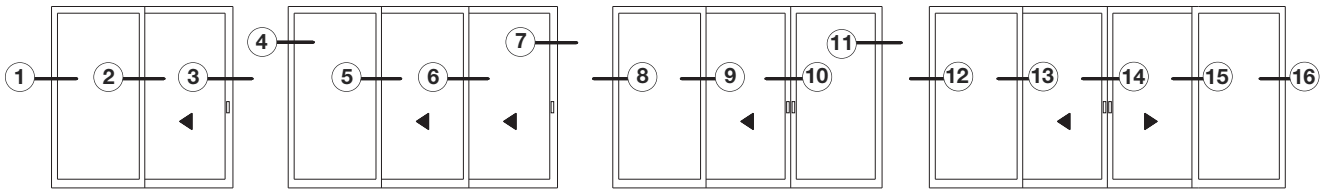

OX OXX OXO OXXO

Multi-Sliders (Any number of panels as viewed from exterior)

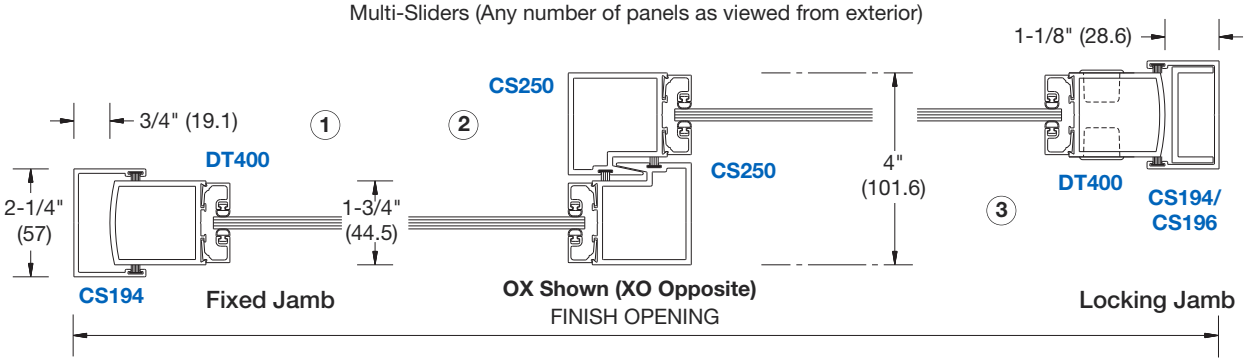

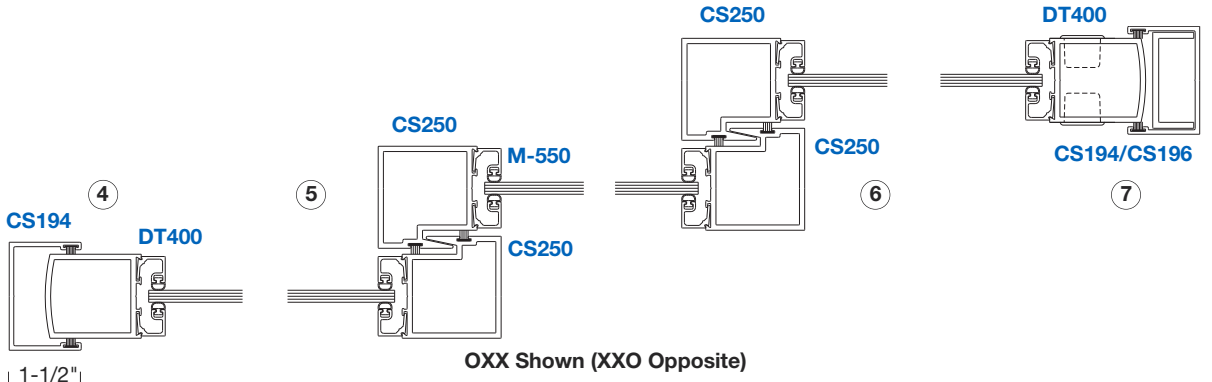

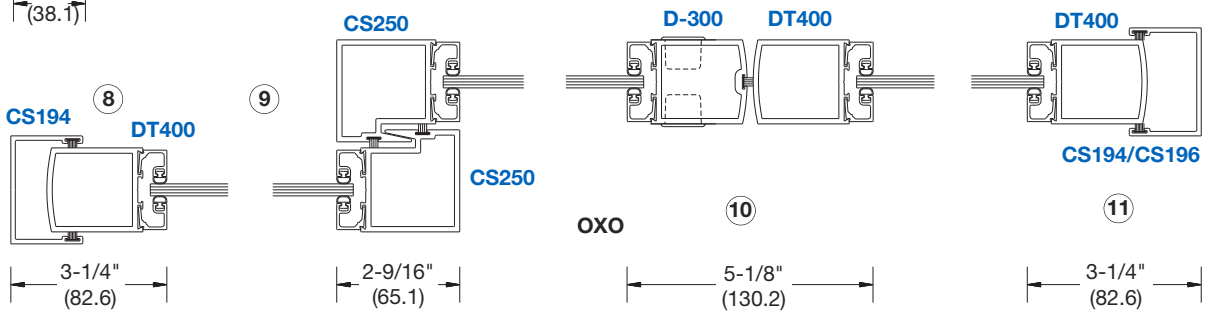

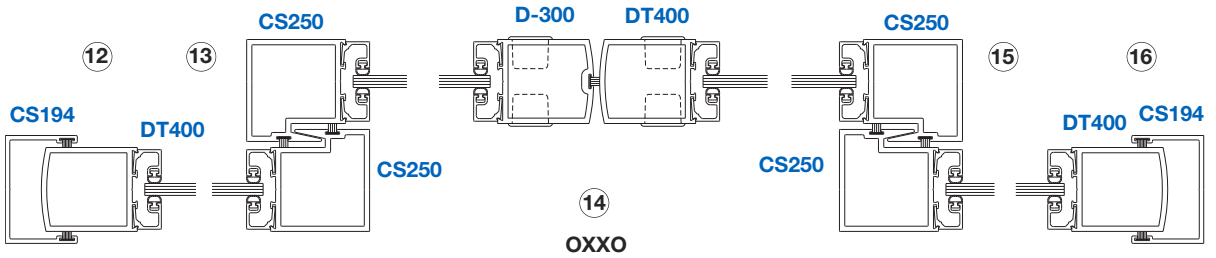

NOT TO SCALE

ENTRANCES

Typical Details

Sliding Doors
• Series 2000

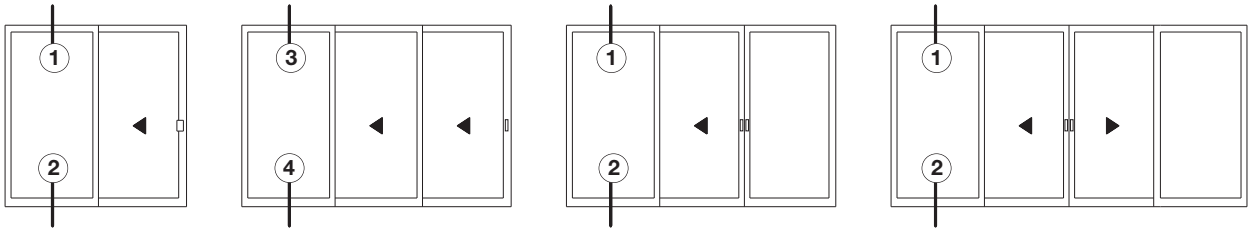

OX OXX OXO OXXO

Multi-Sliders (Any number of panels as viewed from exterior)

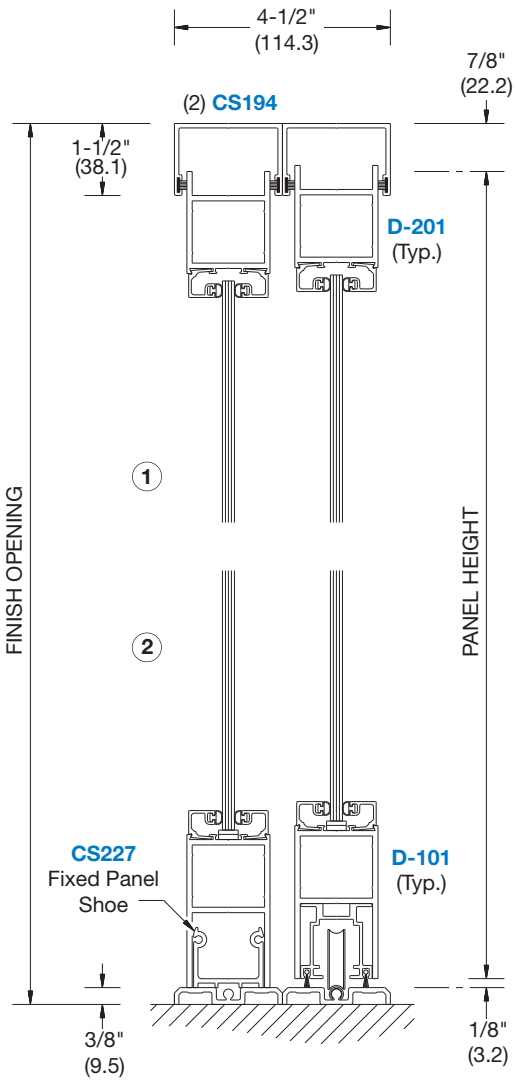

Surface Mounted Tracks

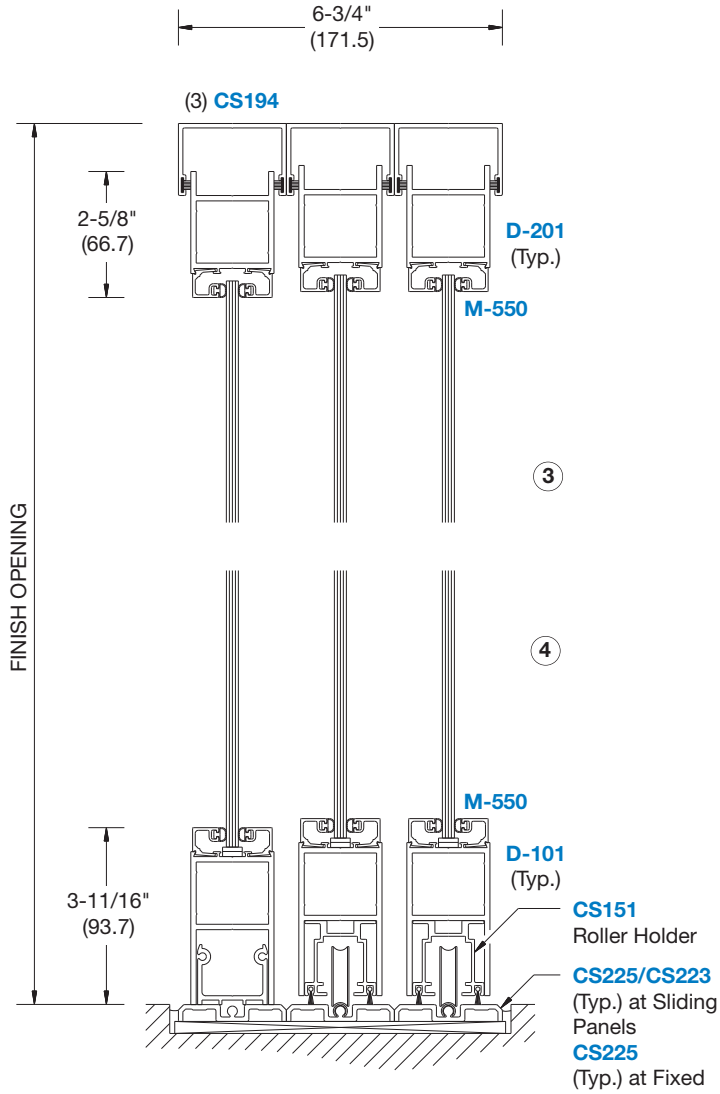

Recessed Tracks

NOT TO SCALE

ENTRANCES

Typical Details

Sliding Doors
• Series 2000

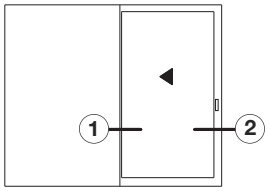

PX

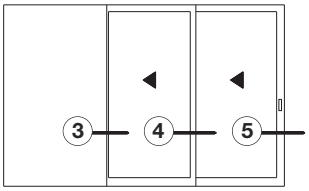

PXX

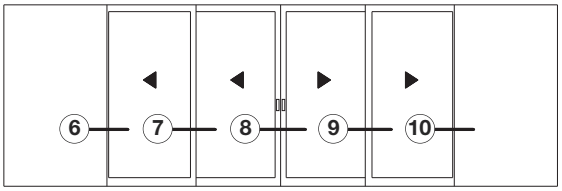

PXXXXP

Pocket Doors (Any number of panels as viewed from exterior)

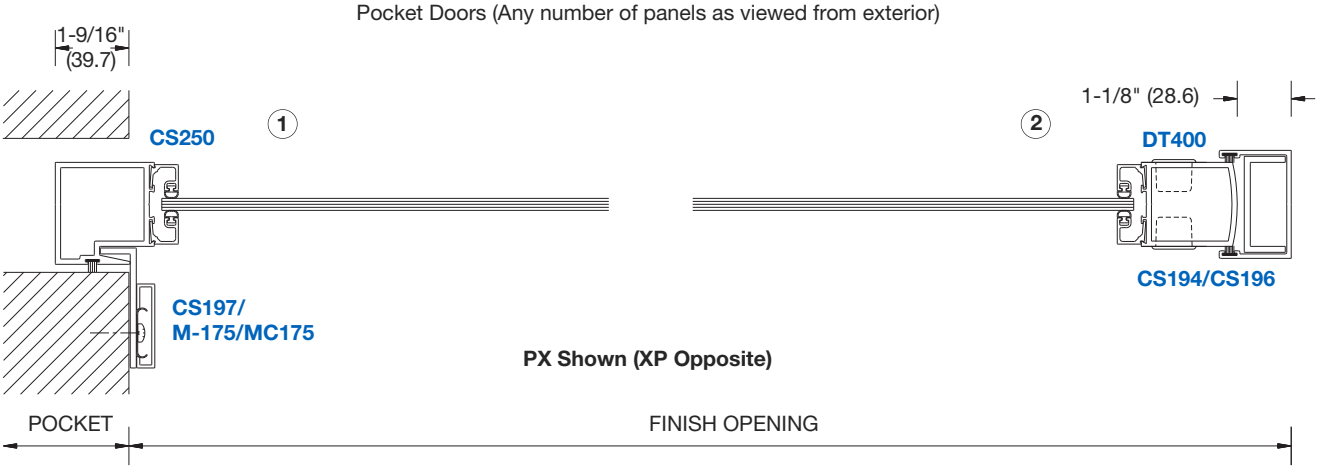

PX Shown (XP Opposite)

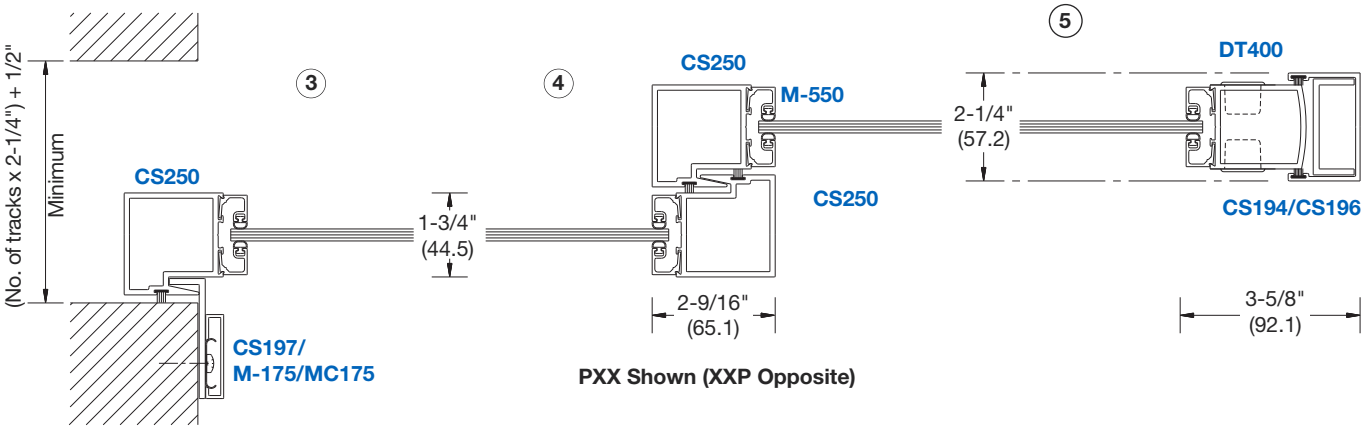

PXX Shown (XXP Opposite)

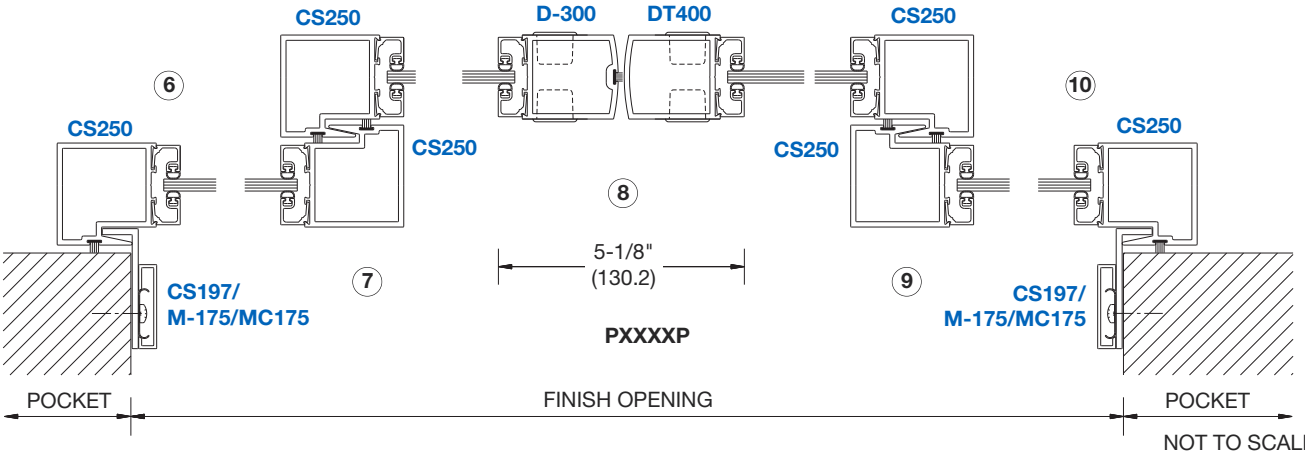

PXXXXP

NOT TO SCALE

Typical Details

Sliding Doors
• Series 2000

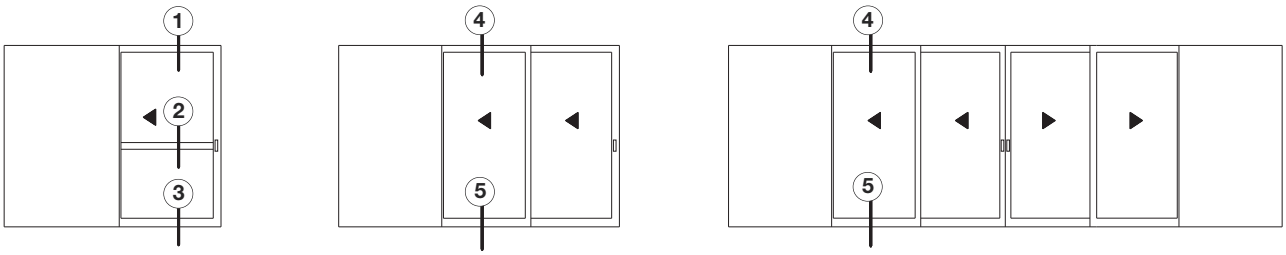

PX PXX PXXXXP

Pocket Doors (Any number of panels as viewed from exterior)

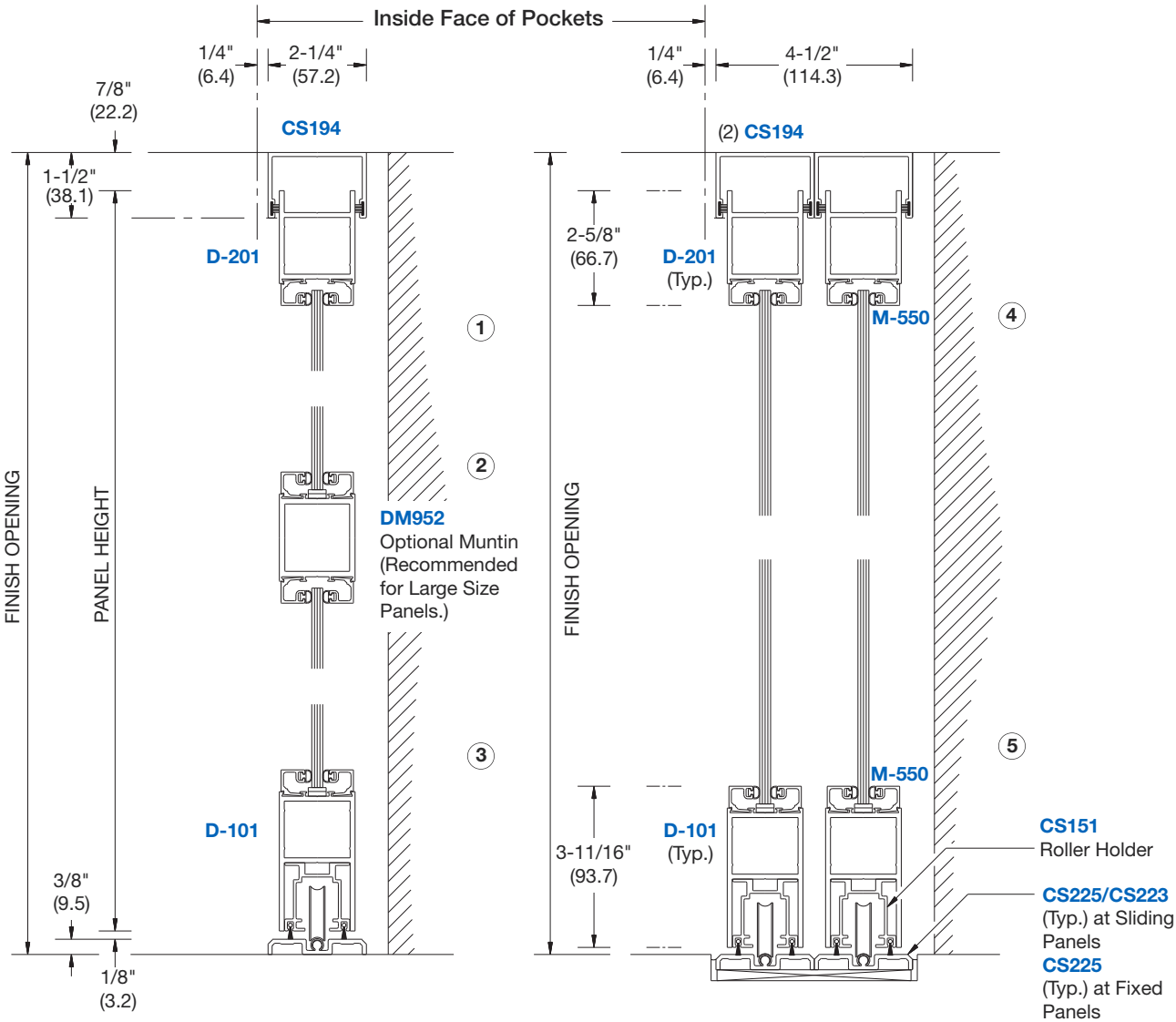

Surface Mounted Tracks

Recessed Tracks

NOT TO SCALE

ENTRANCES

Hardware

Sliding Doors
• Series 2000

DOOR PACKAGES INCLUDE:

Fabricated Items: Door panels are shop assembled with the following items installed: Maximum Security Hookbolt Lock, Two Cylinders, Flush Finger Pulls, Tandem Rollers, and Roller Holders. The locking channel with lock cut-out is furnished loose.

Non-Fabricated Items: Headers, Jambs, Tracks, Interlocker Angle, and Trim for Pocket Doors. Sizes need to be field adjusted to exact opening dimensions.

NOTE: Installation screws and preparation is excluded.

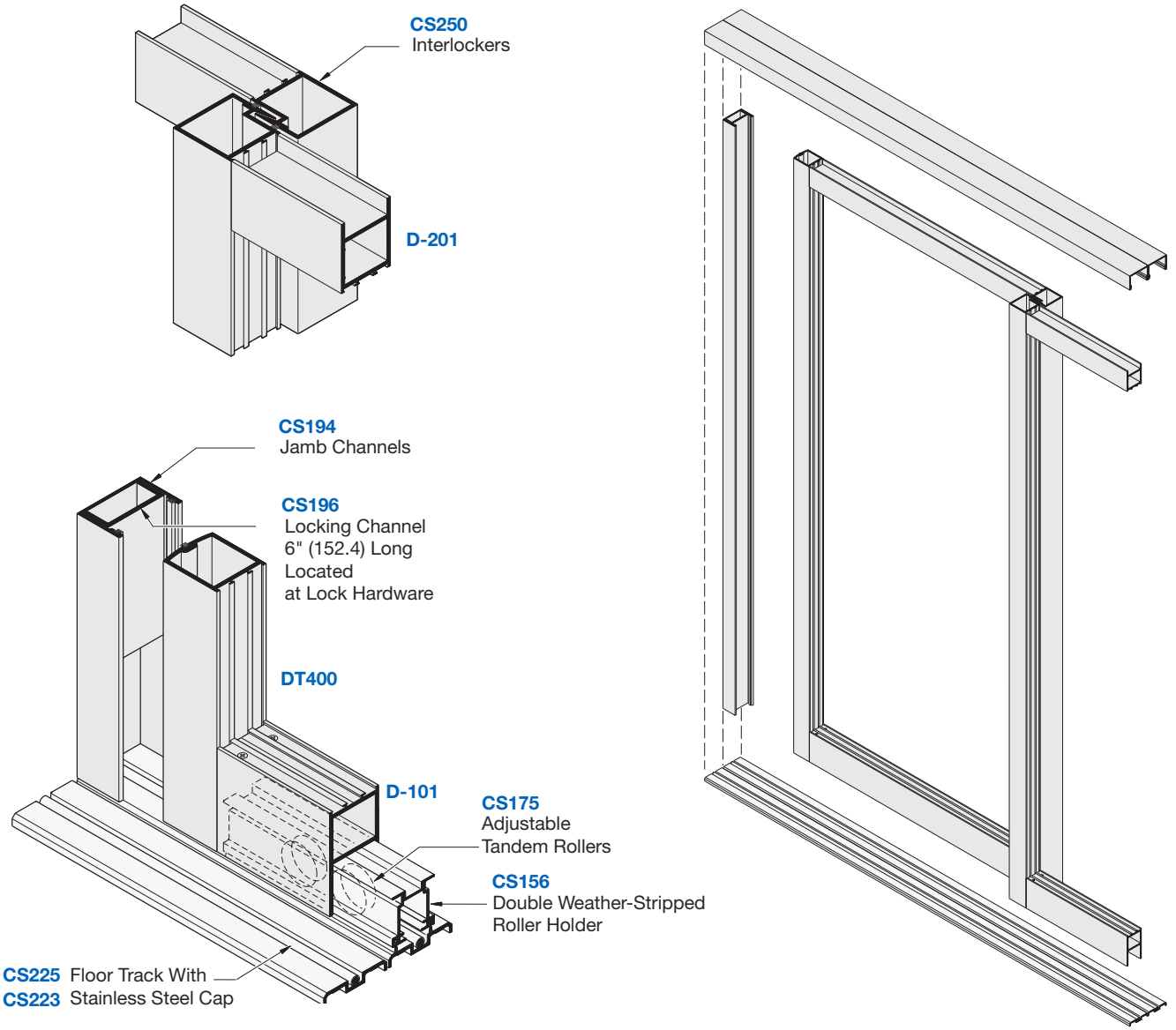

Table of Contents

Elephant Sliding Doors
• Series E1200

new

C.R. LAURENCE
ELEPHANT
DOORS

An Operable Storefront System With Functioning Doors

SECTION H8 PAGE

SPECIFICATIONS 02-H8
TECHNICAL DATA 03-H8
SPECIAL FEATURES 04-H8
TYPICAL DETAILS ..... 05-H8 thru 08-H8

Due to the diversity in state/provincial, local, and federal laws and codes that govern the design and application of architectural products, it is the responsibility of the individual architect, owner, and installer to ensure that products selected for use on projects comply with all applicable building codes and laws. U.S. Aluminum exercises no control over the use or application of its products, glazing materials, and operating hardware, and assumes no responsibility thereof.

The rapidly changing technology within the architectural aluminum products industry demands that U.S. Aluminum reserve the right to revise, discontinue or change any product line, specification or electronic media without prior written notice.

NOTE: Dimensions in parentheses ( ) are millimeters unless otherwise noted.
Other metric units shown in this publication are:

m - meter	Kg - kilogram
Pa - pascal	KPa - kilopascal
MPa - megapascal	

ENTRANCES

Specifications

Elephant Sliding Doors
• Series E1200

new

SECTION 08 43 29
SLIDING STOREFRONTS

SERIES	FACE WIDTH	DEPTH	GLAZING INFILLS	GLAZING METHOD
E1200	4-1/2" (114.3)	6-1/2" (165.1)	1/4" (6) or 1" (25)	Interior

I. GENERAL DESCRIPTION
Work Included: The glazing contractor shall furnish all necessary materials, labor, and equipment for the complete installation of aluminum sliding doors as detailed on the drawings and specified herein.
Work Not Included: Structural support of the framing system, wood framing, structural steel, masonry and final cleaning.

QUALITY ASSURANCE
Drawings and specifications are based on U.S. Aluminum Series E1200 Elephant Sliding Doors. Whenever substitute products are to be considered, supporting technical literature, samples, drawings, and performance data must be submitted 10 days prior to bid in order to make a valid comparison of the products involved.

PERFORMANCE REQUIREMENTS
Structural Performance: shall be tested in accordance with ASTM E 330 and based on:
- Maximum deflection of L/204 of the span
- Allowable stress with a safety factor of 1.65

The system shall perform to this criteria under a windload of *(Specify)* psf.

II. PRODUCTS MATERIALS
Extrusions shall be 6063-T5 alloy and temper (ASTM B221 alloy T5 temper). Fasteners, where exposed, shall be aluminum, stainless steel or zinc plated steel in accordance with ASTM A 164. Perimeter anchors shall be aluminum or steel, providing the steel is properly isolated from the aluminum. Glazing gaskets shall be E.P.D.M. elastomeric extrusions. Door shall have a minimum wall thickness of 3/16" (4.8).

FINISH
All exposed framing surfaces shall be free of scratches and other serious blemishes. Aluminum extrusions shall be given a caustic etch followed by an anodic oxide treatment to obtain…
(Specify one of the following):
_____#11 Clear anodic coating
_____#22 Dark Bronze anodic coating
_____#33 Black anodic coating

A Fluoropolymer paint coating conforming with the requirements of AAMA 2605. Color shall be (Specify a U.S. Aluminum standard color).

FABRICATION
The framing system shall provide for flush glazing on all sides with no projecting stops. Vertical and horizontal framing members shall have a nominal face dimension of 4-1/2" (114.3). Overall depth shall be 6-1/2" (165.1). Elephant Entrance framing members shall be constructed with clip joinery to vertical mullions. Sliding panels shall be supported by aluminum base tracks equipped with four tandem ball bearing rollers, each roller capable of supporting 800 pounds (363 Kg).

OPTIONAL: Aluminum Swing Entrance.
A. Hardware:
1. Weatherstripping: The active meeting stile of all pair of doors shall have an adjustable astragal with double line of weatherstripping.
2. Threshold: Extruded aluminum, one piece per door opening.
3. Continuous geared hinges.
4. Standard push/pull handle set.
5. Jackson overhead closer.
6. _____ Deadbolt Lock.
7. _____ Flush Bolts.
8. Cylinder(s).
9. Thumbturn-interior [optional].
10. Cylinder guard [optional].

III. EXECUTION INSTALLATION
All glass framing shall be set in correct locations as shown in the details and shall be level, square, plumb, and in alignment with other work in accordance with the manufacturer's installation instructions and approved shop drawings. All joints between framing and the building structure shall be sealed in order to secure a watertight installation.

PROTECTION AND CLEANING
After installation the General Contractor shall adequately protect exposed portions of aluminum surfaces from damage by grinding and polishing compounds, plaster, lime, acid, cement or other contaminants. The General Contractor shall be responsible for final cleaning.

ENTRANCES

Technical Data

Elephant Sliding Doors
• Series E1200

new

TYPICAL APPLICATIONS:

- Mall Fronts
- Car, Truck, and Boat Dealerships
- Convention Centers
- Museums
- Sports Venues
- Gymnasiums
- Performing Arts Facilities

The Series E1200 Elephant Door Operable Storefront System is a sliding/pivoting entrance system designed and engineered with versatility and economics in mind. This system is ideally suited for monumental applications requiring a sliding storefront with functional pivoting doors. Its rugged overall construction coupled with heavy wall stiles and interlocks, heavy-duty tandem rollers, and a concealed floor track, offers smooth operation and durability. Pivoting doors can be equipped with overhead concealed closers, cylinder locks, pulls or panics. Various configurations are available to meet your design needs. The E1200 is intended for installations that have soffit overhangs greater than the overall entrance frame height. Local codes should be checked for compliance.

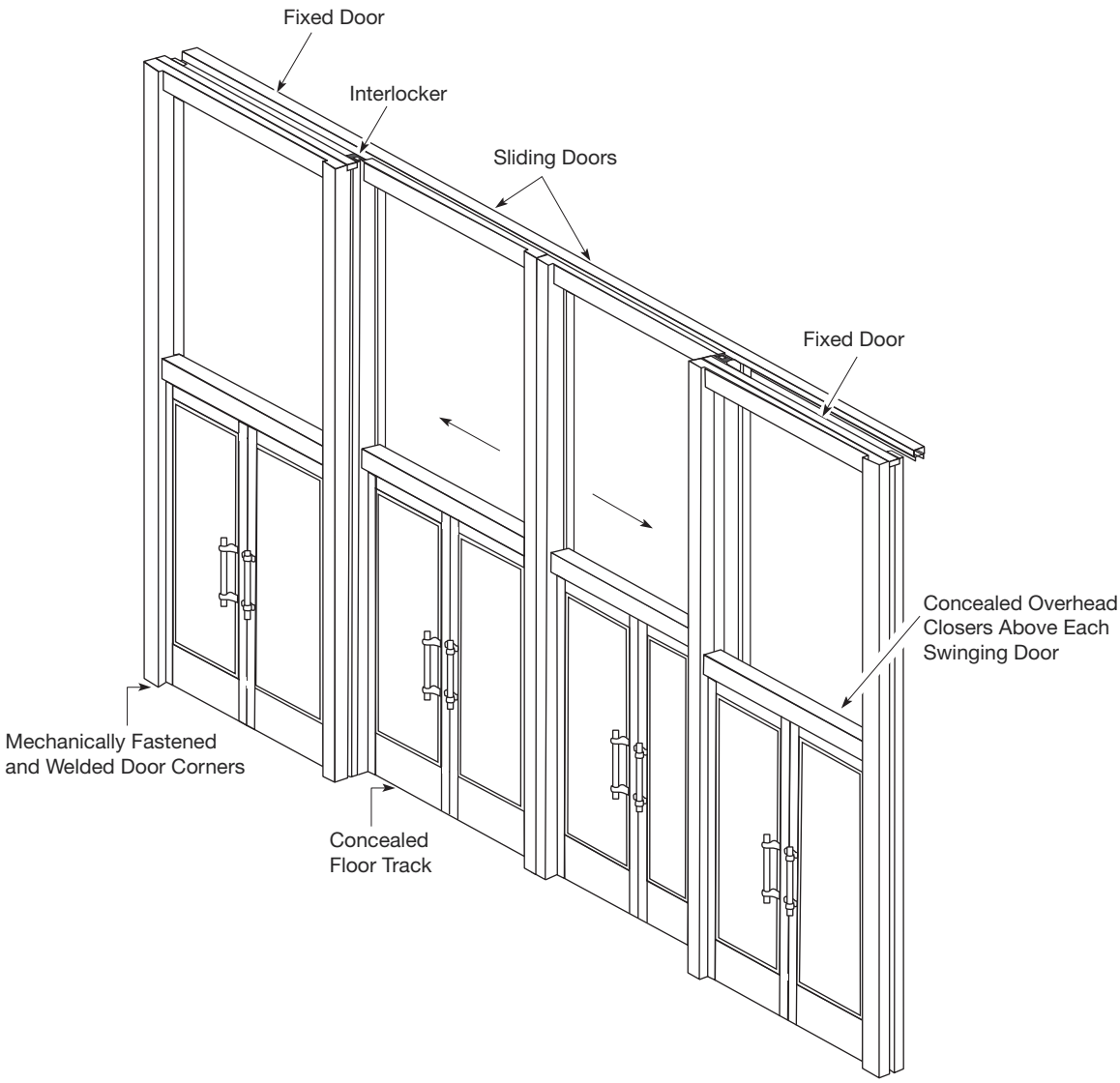

ENTRANCES

Special Features

Elephant Sliding Doors
• Series E1200

new

- Sliding Storefront
- Recessed Floor Track
- "Elephant Size" Opening
- Interlocking Panels

In the Closed Position It's Business as Usual with Pairs of Swinging Entrance Doors.

With the Sliding Doors Open, the "Elephant Size" Opening Allows for Larger Objects to be Moved In or Out.

ENTRANCES

Typical Details

Elephant Sliding Doors • Series E1200

new

DOOR FRAMING FOR 1/4" (6) AND 1" (25) GLAZING

NOTE: NP225 Glazing Gaskets used on both sides of glass. (Typical) Shown with Series 400 Medium Stile Doors. Available with other Series Doors upon request.

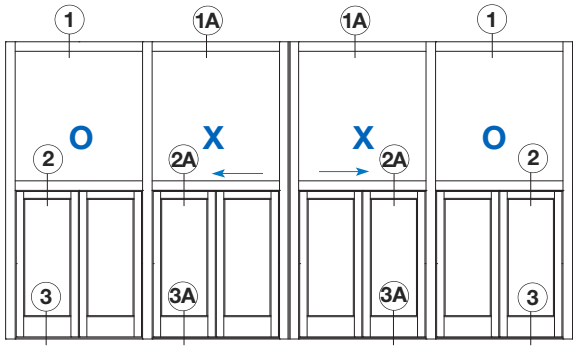

TYPICAL ELEVATION

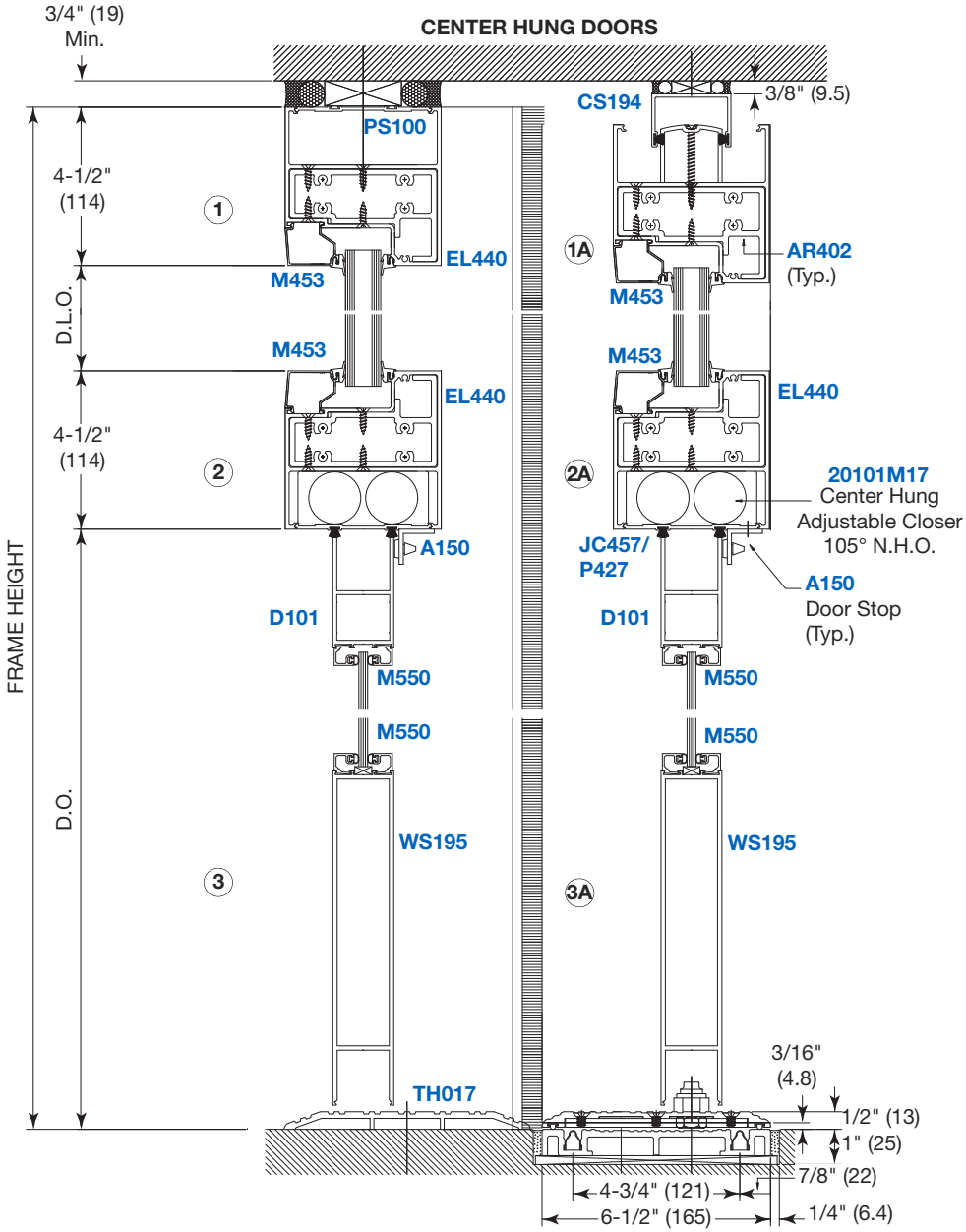

NOT TO SCALE

ENTRANCES

Typical Details

Elephant Sliding Doors • Series E1200

new

DOOR FRAMING FOR 1/4" (6) AND 1" (25) GLAZING

NOTE: NP225 Glazing Gaskets used on both sides of glass. (Typical) Shown with Series 400 Medium Stile Doors. Available with other Series Doors upon request.

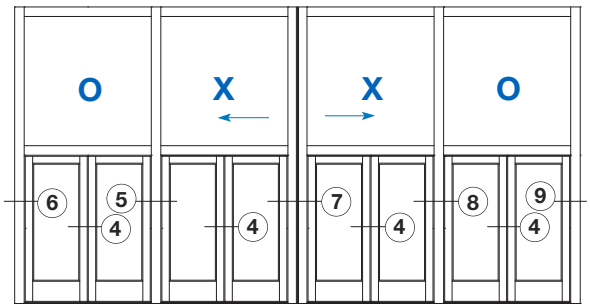

TYPICAL ELEVATION

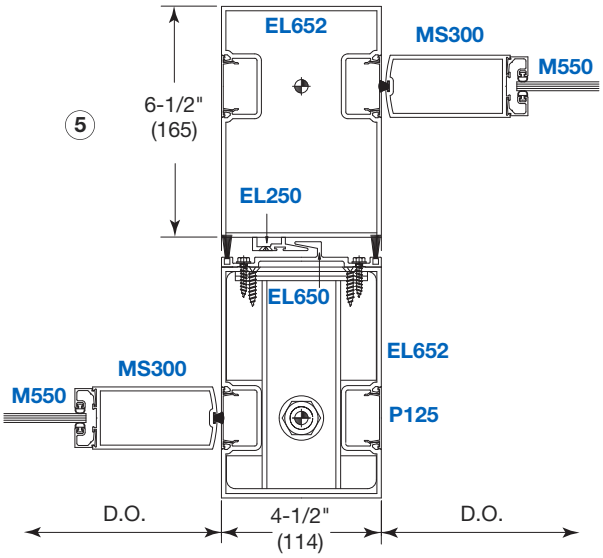

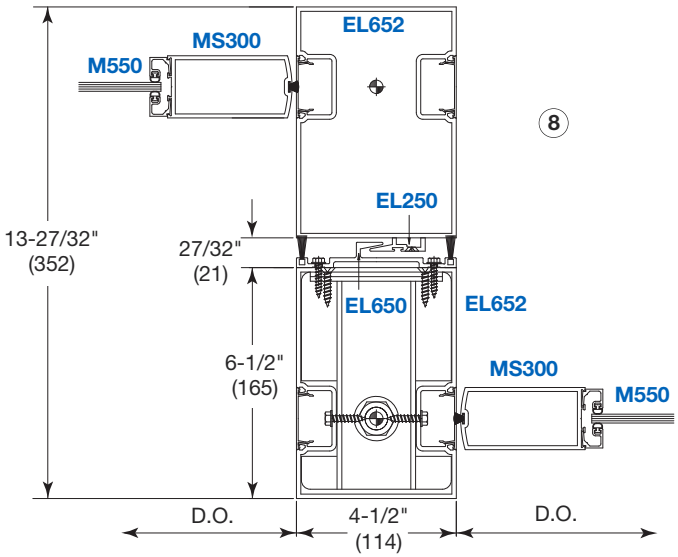

NOT TO SCALE

Typical Details

Elephant Sliding Doors
• Series E1200

new

DOOR FRAMING
FOR 1/4" (6) AND 1" (25) GLAZING

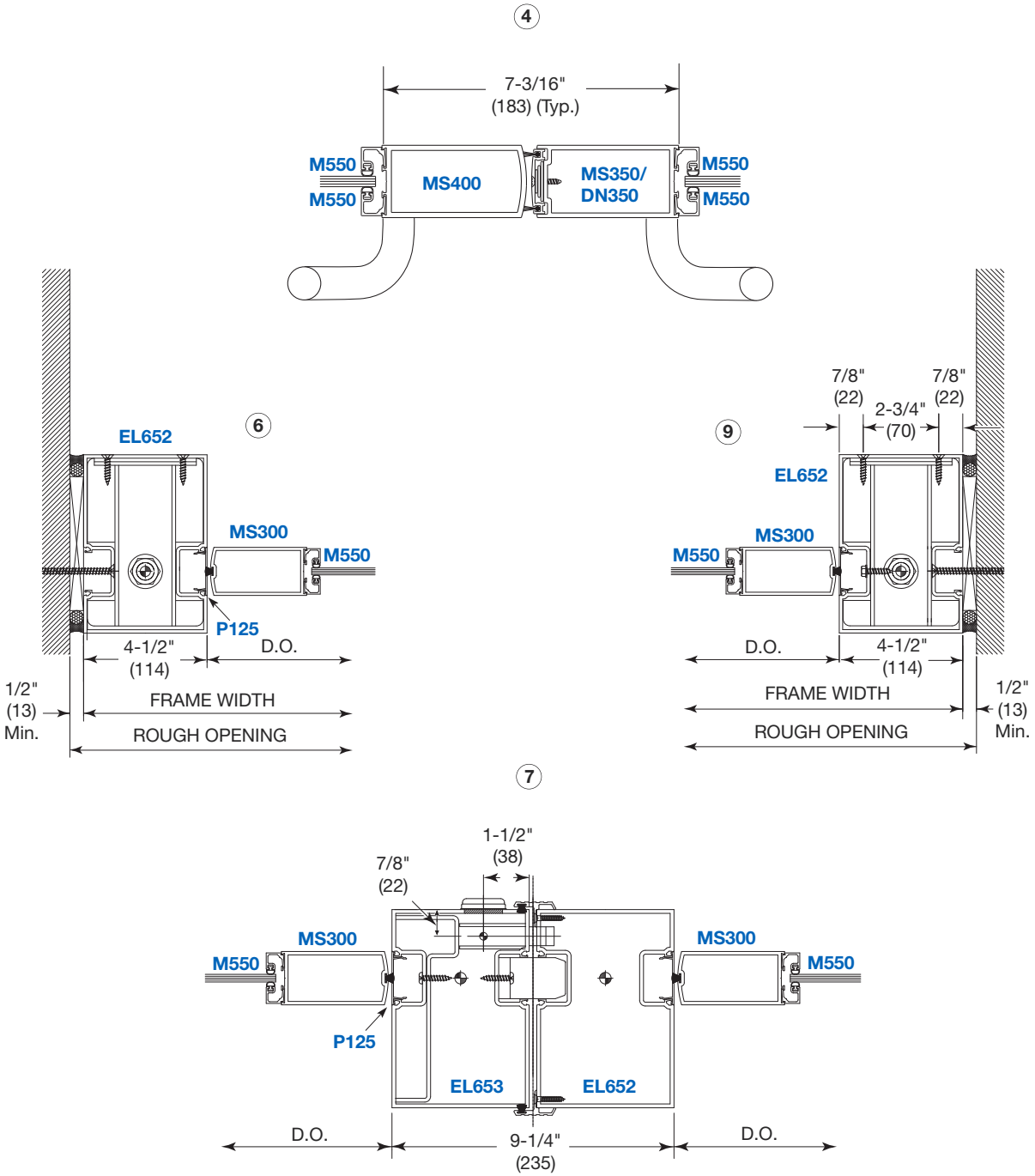

NOT TO SCALE

ENTRANCES

Typical Details

Elephant Sliding Doors • Series E1200

new

DOOR FRAMING FOR 1/4" (6) AND 1" (25) GLAZING

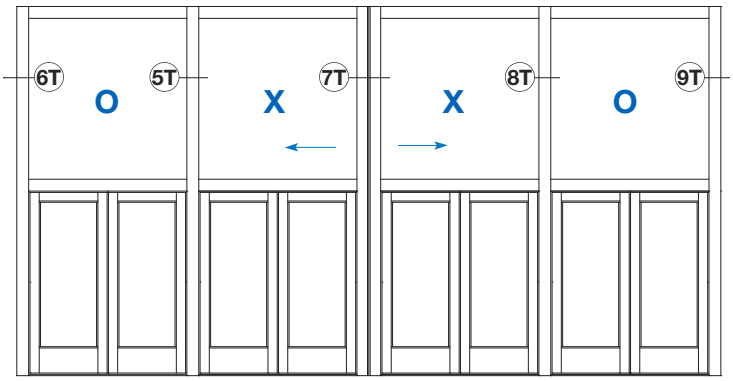

TYPICAL ELEVATION

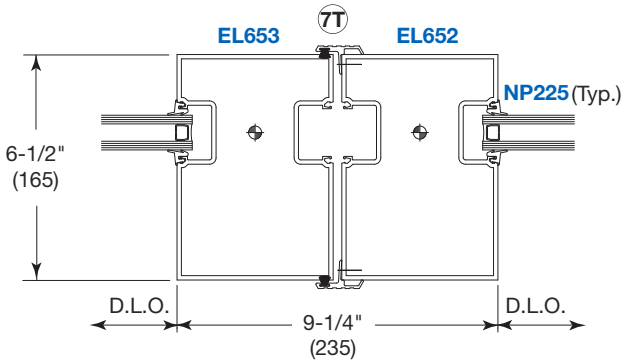

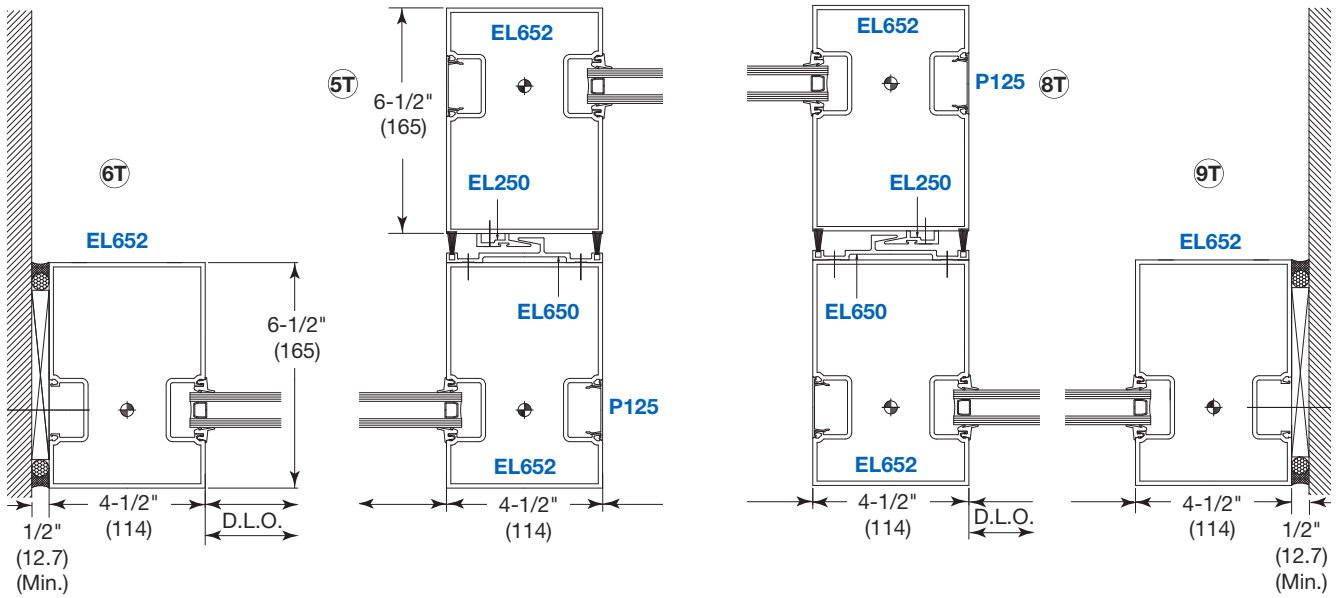

NOT TO SCALE

ENTRANCES

Table of Contents

Accessories and Replacement Parts

SECTION H9 PAGE

SURFACE MOUNTED DOOR CLOSERS .....02-H9 and 03-H9
OVERHEAD CONCEALED DOOR CLOSERS .....04-H9 and 05-H9
DOOR PIVOTS.....06-H9 and 07-H9
BUTT HINGES AND MAGNETIC DOOR RETAINERS .....08-H9 and 09-H9
CONTINUOUS HINGES .....10-H9 and 11-H9
PULL HANDLES AND PUSH BARS .....12-H9 and 13-H9
LOCK CYLINDERS .....14-H9 and 15-H9
DEADLOCKS, DEADBOLTS, DEADLATCH LOCKS, AND ELECTRIC STRIKES.....16-H9 and 19-H9
PUSH-PULL PADDLES AND LEVER HANDLES 20-H9
HEADER, THRESHOLD, AND FLUSH BOLTS .....21-H9 and 22-H9
PANIC EXIT DEVICES .....23-H9 thru 28-H9
ACCESS CONTROL HANDLES .....29-H9 thru 32-H9
DOOR STOPS AND HOLDERS.....33-H9 thru 35-H9
THRESHOLDS.....36-H9 thru 40-H9

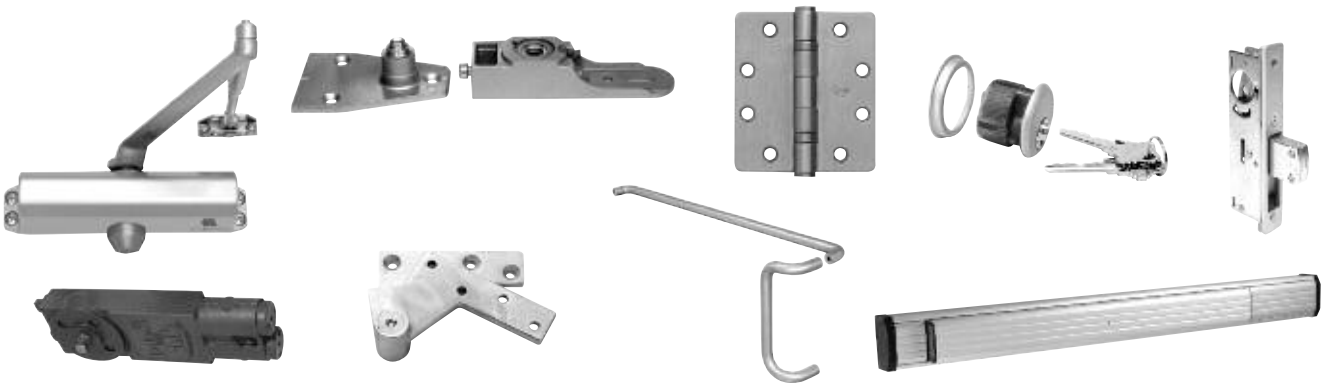

Due to the diversity in state/provincial, local, and federal laws and codes that govern the design and application of architectural products, it is the responsibility of the individual architect, owner, and installer to ensure that products selected for use on projects comply with all applicable building codes and laws. U.S. Aluminum exercises no control over the use or application of its products, glazing materials, and operating hardware, and assumes no responsibility thereof.

The rapidly changing technology within the architectural aluminum products industry demands that U.S. Aluminum reserve the right to revise, discontinue or change any product line, specification or electronic media without prior written notice.

NOTE: Dimensions in parentheses ( ) are millimeters unless otherwise noted.
Other metric units shown in this publication are:

m - meter	Kg - kilogram
Pa - pascal	KPa - kilopascal
MPa - megapascal	

ENTRANCES

Accessories

Surface Mounted Door Closers

CRL Jackson Brand Non-Handed, Reversible Door Closers That Can Be Mounted Three Ways

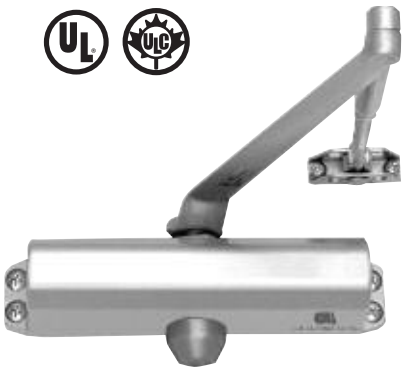

DC50 SERIES ANSI GRADE 1 SURFACE MOUNTED DOOR CLOSERS

- Aluminum and Bronze Finishes
- ANSI A156.4 Grade 1
- Door Weights: 33-264 Lbs.
- 10 Year Limited Warranty

PART NO.	FINISH	SIZE	CLOSER DESCRIPTION
DC51A	Aluminum	1	Light Commercial/Residential
DC51BRZ	Dark Bronze	1	Light Commercial/Residential
DC52A	Aluminum	2	Light-Duty
DC52BRZ	Dark Bronze	2	Light-Duty
DC53A	Aluminum	3	Standard-Duty
DC53BRZ	Dark Bronze	3	Standard-Duty
DC54A	Aluminum	4	Standard-Duty
DC54BRZ	Dark Bronze	4	Standard-Duty
DC55A	Aluminum	5	Heavy-Duty Commercial
DC55BRZ	Dark Bronze	5	Heavy-Duty Commercial

Minimum order: 1 each.

PR80 SERIES ADJUSTABLE SPRING POWER SURFACE MOUNTED DOOR CLOSERS

- Aluminum and Bronze Finishes
- Adjustable Size From 1 to 5
- Door Weights: 33-264 Lbs.
- 10 Year Limited Warranty

PART NO.	FINISH	SIZE	CLOSER DESCRIPTION
PR80A	Aluminum	2-5	Adjustable
PR80DU	Dark Bronze	2-5	Adjustable
PR82BFA	Aluminum	1-4	Barrier-Free/Adjustable
PR82BFDU	Dark Bronze	1-4	Barrier-Free/Adjustable

Minimum order: 1 each.

Mounting accessories for all CRL Surface Mounted Door Closers are available for viewing or order through **crlaurence.com**.

PR70 SERIES ADJUSTABLE SPRING POWER SURFACE MOUNTED DOOR CLOSERS

- Available in Up to Four Finishes
- Adjustable Spring Sizes From 1/2 to 6
- Door Weights: 22-330 Lbs.
- 10 Year Limited Warranty

Each Closer is conveniently packaged with instructions and a mounting template.

PART NO.	FINISH	SPRING SIZE	CLOSER DESCRIPTION
PR70BFA	Aluminum	1/2-4	Barrier-Free/Adjustable
PR70BFDU	Dark Bronze	1/2-4	Barrier-Free/Adjustable
PR70BFBG	Bright Gold	1/2-4	Barrier-Free/Adjustable
PR70BFCH	Bright Chrome	1/2-4	Barrier-Free/Adjustable
PR72DAA	Aluminum	1/2-4	Delayed Action/Adjustable
PR72DADU	Dark Bronze	1/2-4	Delayed Action/Adjustable
PR72DABG	Bright Gold	1/2-4	Delayed Action/Adjustable
PR72DACH	Bright Chrome	1/2-4	Delayed Action/Adjustable
PR74BCA	Aluminum	2-6	Adjustable
PR74BCDU	Dark Bronze	2-6	Adjustable
PR76DAA	Aluminum	2-6	Delayed Action/Adjustable
PR76DADU	Dark Bronze	2-6	Delayed Action/Adjustable

Minimum order: 1 each.

NEED MORE INFO? Full details and specifications for all CRL Jackson brand Door Closers can be seen at **crlaurence.com**. Enter the Part Number into the Search Box to view complete details.

Accessories

Surface Mounted Door Closers

CRL Jackson Brand Non-Handed, Reversible Door Closers That Can Be Mounted Three Ways

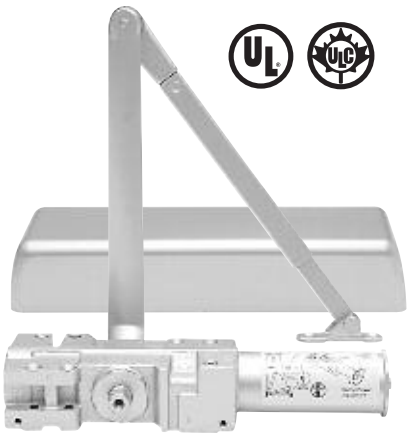

PR90 SERIES ANSI GRADE 1 ADJUSTABLE SPRING POWER SURFACE MOUNTED DOOR CLOSERS

- Aluminum and Bronze Finishes
- ANSI A156.4 - Grade 1
- Door Weights: 33-330 Lbs.
- 10 Year Limited Warranty

PART NO.	FINISH	SPRING SIZE	CLOSER DESCRIPTION
PR90A	Aluminum	1-6	Barrier-Free/Adjustable
PR90DU	Dark Bronze	1-6	Barrier-Free/Adjustable
PR92DAA	Aluminum	1-6	Delayed Action/Adjustable
PR92DADU	Dark Bronze	1-6	Delayed Action/Adjustable

Minimum order: 1 each.

PR40 SERIES ANSI GRADE 1 ADJUSTABLE SPRING POWER SURFACE MOUNTED DOOR CLOSERS

- Aluminum and Bronze Finishes
- Adjustable Size From 1 to 5
- Door Weights: 33-264 Lbs.
- 10 Year Limited Warranty

PART NO.	FINISH	SPRING SIZE	CLOSER DESCRIPTION
PR40A	Aluminum	1-4	Barrier-Free/Adjustable
PR40DU	Dark Bronze	1-4	Barrier-Free/Adjustable
PR42A	Aluminum	2-5	Adjustable
PR42DU	Dark Bronze	2-5	Adjustable
PR44DAA	Aluminum	2-5	Delayed Action/Adjustable
PR44DADU	Dark Bronze	2-5	Delayed Action/Adjustable

Minimum order: 1 each.

SURFACE MOUNTED CLOSER UNIVERSAL MOUNTING OPTIONS

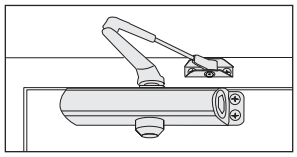

Regular Projecting Arm Installation
Closer installed on "PULL" side of the door

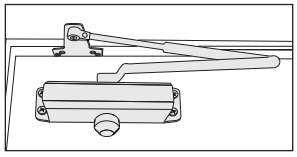

Parallel Arm Installation
Closer installed on "PUSH" side of the door.

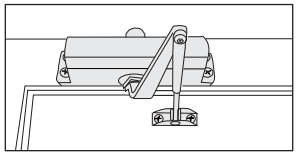

Top Jamb Installation
Closer Installed above door on "PUSH" side.

Each Closer is conveniently packaged with instructions and a mounting template.

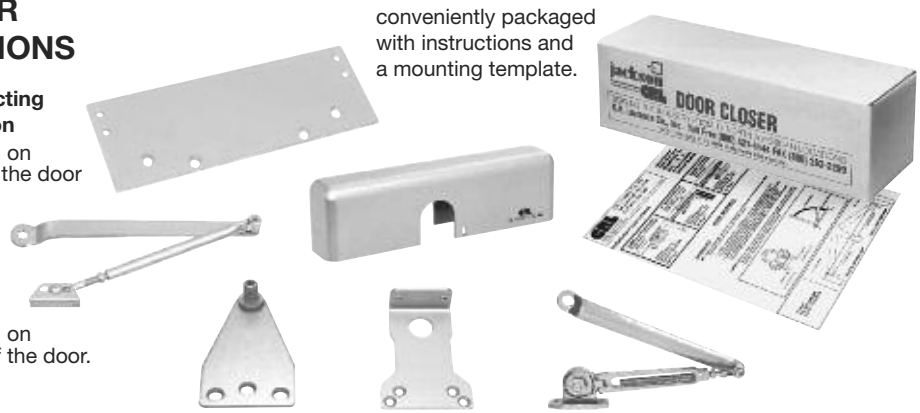

Mounting accessories for all CRL Jackson Surface Mounted Door Closers are available for viewing or order through **crlaurence.com.**

NEED MORE INFO? Full details and specifications for all CRL Jackson brand Door Closers can be seen at **crlaurence.com.** Enter the Part Number into the Search Box to view complete details.

ENTRANCES

Accessories

Overhead Door Closers

CRL JACKSON ADJUSTABLE SPRING POWER OVERHEAD CONCEALED CENTER HUNG DOOR CLOSERS

- Adjustable Spring Power Size 1 (Barrier-Free) to 4 (Regular)
- Suitable for Doors From 30" to 48" (762 to 1219) Wide to Meet A.D.A. Opening Force Requirements
- Five Year Limited Warranty
- UL Listed

SIDE-LOAD "S" PIVOT PACKAGE

- Floor Mounted Pivot for 1-1/2" (38) Deep Bottom Rail
- 3/16" (5) Height Adjustment

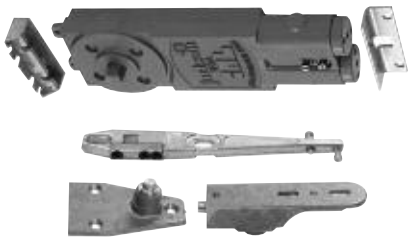

PART NO.	SPRING SIZE	TYPE
21101S17	Adjustable	105° No Hold Open
21101S18	Adjustable	105° Hold Open
21101S19	Adjustable	90° No Hold Open
21101S20	Adjustable	90° Hold Open

Minimum order: 1 each. All Door Closers can be combined for quantity pricing.

SIDE-LOAD "GE" PIVOT PACKAGE

- Threshold Mounted Pivot for 1-1/2" (38) Deep Bottom Rail
- 3/16" (5) Height Adjustment

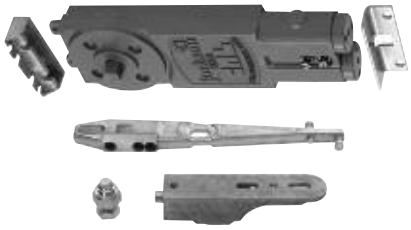

PART NO.	SPRING SIZE	TYPE
21101GE17	Adjustable	105° No Hold Open
21101GE18	Adjustable	105° Hold Open
21101GE19	Adjustable	90° No Hold Open
21101GE20	Adjustable	90° Hold Open

Minimum order: 1 each. All Door Closers can be combined for quantity pricing.

CRL JACKSON OVERHEAD CONCEALED CENTER HUNG DOOR CLOSERS

- Suitable for Doors From 30" to 48" (762 to 1219) Wide
- Five Year Limited Warranty
- UL Listed

SIDE-LOAD "S" PIVOT PACKAGE

- Floor Mounted Pivot for 1-1/2" (38) Deep Bottom Rail
- 3/16" (5) Height Adjustment

PART NO.	SPRING SIZE	TYPE
21101S01	Regular	105° No Hold Open
21101S02	Regular	105° Hold Open
21101S03	Regular	90° No Hold Open
21101S04	Regular	90° Hold Open

Minimum order: 1 each. All Door Closers can be combined for quantity pricing.

A.D.A. NOTE: Although the Adjustable Spring Power Door Closer can be adjusted to compensate for site conditions, adequate closing force might not be obtained while complying with A.D.A. opening force requirements.

SIDE-LOAD "GE" PIVOT PACKAGE

- Threshold Mounted Pivot for 1-1/2" (38) Deep Bottom Rail
- 3/16" (5) Height Adjustment

PART NO.	SPRING SIZE	TYPE
21101GE01	Regular	105° No Hold Open
21101GE02	Regular	105° Hold Open
21101GE03	Regular	90° No Hold Open
21101GE04	Regular	90° Hold Open

Minimum order: 1 each. All Door Closers can be combined for quantity pricing.

NOTE: An auxiliary floor or overhead door stop is recommended to prevent possible damage to both the door closer and entryway due to over-extension of maximum allowable door swing.

Visit **crlaurence.com** for all available CRL Jackson door closer packages and accessories.

Online usalum.com By Phone (800) 262-5151 Ext. 5305

Online crlaurence.com By Phone (800) 421-6144 Ext. 5305

Accessories

Overhead Door Closers

CRL JACKSON OVERHEAD CONCEALED OFFSET ARM DOOR CLOSERS

- Suitable for Doors From 30" to 48" (762 to 1219) Wide
- Five Year Limited Warranty
- UL Listed

ADJUSTABLE SPRING POWER OFFSET ARM PACKAGE

- Adjustable Spring Power Size 1 (Barrier-Free) to Size 4 (Regular)
- Meets A.D.A. Opening Force Requirements
- Available in Two Arm Finishes

ALUMINUM PART NO.	DARK BRONZE PART NO.	SPRING SIZE	TYPE
21201U62817	21201U31317	Adjustable	105° No Hold Open
21201U62818	21201U31318	Adjustable	105° Hold Open
21201U62819	21201U31319	Adjustable	90° No Hold Open
21201U62820	21201U31320	Adjustable	90° Hold Open

Minimum order: 1 each. All Door Closers can be combined for quantity pricing.

REGULAR SPRING POWER OFFSET ARM PACKAGE

- Fixed Spring Size
- Available in Two Arm Finishes

ALUMINUM PART NO.	DARK BRONZE PART NO.	SPRING SIZE	TYPE
21201U62801	21201U31301	Regular	105° No Hold Open
21201U62802	21201U31302	Regular	105° Hold Open
21201U62803	21201U31303	Regular	90° No Hold Open
21201U62804	21201U31304	Regular	90° Hold Open

Minimum order: 1 each. All Door Closers can be combined for quantity pricing.

CRL JACKSON OVERHEAD CONCEALED DOOR CLOSER BODIES

- Closer Body Only in Fixed and Adjustable Spring Sizes
- Suitable for Doors From 30" to 48" (762 to 1219) Wide

ADJUSTABLE SPRING POWER OVERHEAD CONCEALED DOOR CLOSER BODY

- Adjustable Spring Power Size 1 (Barrier-Free) to Size 4 (Regular)
- Can Retrofit Existing Fixed Spring Closers
- Five Year Limited Warranty

Body Only – Mounting Clips are not included.
For standard clips, specify Part No. 20219.

1/2" STANDARD SPINDLE PART NO.	SPRING SIZE	TYPE
20101M17	Adjustable	105° No Hold Open
20101M18	Adjustable	105° Hold Open
20101M19	Adjustable	90° No Hold Open
20101M20	Adjustable	90° Hold Open

Minimum order: 1 each. All Door Closers can be combined for quantity pricing.

STANDARD OVERHEAD CONCEALED DOOR CLOSER BODY

- Fixed Regular Spring Size
- Five Year Limited Warranty

Body Only – Mounting Clips are not included.
For standard clips, specify Part No. 20219.

1/2" STANDARD SPINDLE PART NO.	SPRING SIZE	TYPE
20101M01	Regular	105° No Hold Open
20101M02	Regular	105° Hold Open
20101M03	Regular	90° No Hold Open
20101M04	Regular	90° Hold Open

Minimum order: 1 each. All Door Closers can be combined for quantity pricing.

A.D.A. NOTE: Although the Adjustable Spring Power Door Closer can be adjusted to compensate for site conditions, adequate closing force might not be obtained while complying with A.D.A. opening force requirements.

Visit crlaurence.com for all available CRL Jackson door closer packages and accessories.

Online usalum.com By Phone (800) 262-5151 Ext. 5305

Online crlaurence.com By Phone (800) 421-6144 Ext. 5305

ENTRANCES

Accessories

Center Hung Top Arm and Bottom Pivot Sets

SIDE-LOAD CENTER-HUNG TOP ARM ASSEMBLY

- **1/2" (12) Depth Top Rail**

This Adjustable Side-Load Top Arm has an adjusting screw at the end of the Arm to allow the door to be adjusted in or out to match the jambs. The two bolts in the other end of the Arm adjust the centering of the door. Used in 1/2" (12) deep top rails with a notch in the side of the door. Minimum order is one each.

PART NO. 20400B

REPLACEMENT HARDWARE

- **Arm Blocks Fit Side-Load Center-Hung Arms**

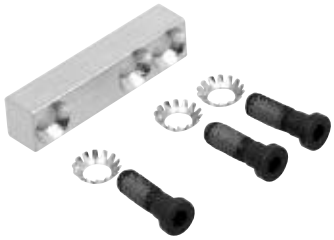

PART NO.	DESCRIPTION
SLB3	Side-Load Arm Block With Three Screws
SLS1	Side-Load Arm Screws and Lock Washers Only – Three Per Pkg.

Minimum order: 1 set.

CRL JACKSON COVER PLATES FOR OVERHEAD CONCEALED DOOR CLOSERS

- **Two or Three Valve Access Holes**

Holes for spindle and two or three valve access are pre-fabricated. Plates have square measure 3-11/16" x 13-3/4" (94 x 349).

PART NO.	VALVES	FINISH
20190628	2	Aluminum
20190313	2	Dark Bronze
203147628	3	Aluminum
203147313	3	Dark Bronze

Minimum order: 1 each.

"GE" TYPE SIDE-LOAD THRESHOLD MOUNT BOTTOM PIVOT SET

- **For 1-1/2" (38) Deep Bottom Rail**

This Pivot mounts to the threshold, and is intended for use with Side-Load applications. A 3/16" (5) height adjustment is possible with the door installed, and requires an adjustment hole in the end of the door. Minimum order is one each.

Recommended Maximum Weight Capacity: 125 pounds (56.7 kg)

PART NO. 20944

"G" TYPE SIDE-LOAD FLOOR MOUNT BOTTOM PIVOT SET

- **For 1-1/2" (38) Deep Bottom Rail**

This Pivot mounts directly to the floor, and is intended for use with Side-Load applications. A 3/16" (5) height adjustment is possible with the door installed, and requires an adjustment hole in the end of the door. Minimum order is one each.

Recommended Maximum Weight Capacity: 125 pounds (56.7 kg)

PART NO. 20902

Accessories

Door Pivots

3/4" OFFSET PIVOT SETS

- **Suitable for Aluminum Frames and Doors Weighing Up to 125 Pounds (57 kg)**
- **1/8" (3.2) Vertical Adjustment**
- **Die Cast Aluminum**

0P34 SERIES

- **Handed - Not Reversible**

Left or right hand Pivot Sets are available in satin aluminum and dark bronze finishes. One set per box.

PART NO.	HANDING	APPLICATION	FINISH
0P34LHA	Left Hand	Flush with Frame Face	Aluminum
0P34LHDU	Left Hand	Flush with Frame Face	Dark Bronze
0P34RHA	Right Hand	Flush with Frame Face	Aluminum
0P34RHDU	Right Hand	Flush with Frame Face	Dark Bronze

Minimum order: 1 set.

- **Oilite Bronze Bushing in Top Frame Portion**

Our Offset Pivot Sets for commercial doors feature quality machined and die cast components. Everything you need comes in one box, including the door fasteners and anchors.

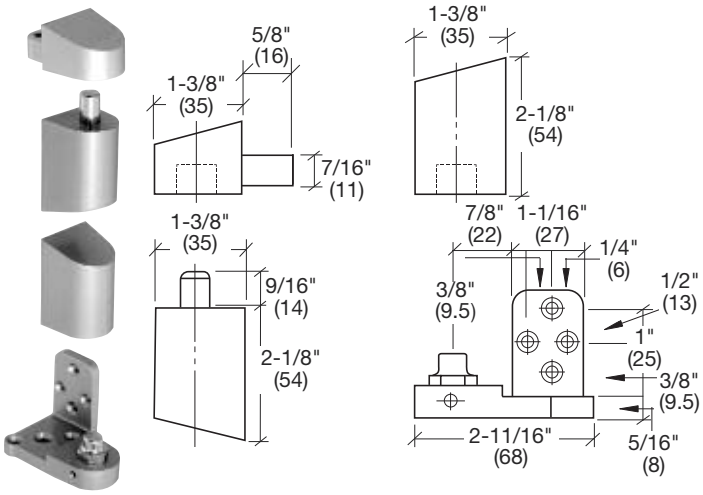

LH/RHR Shown

OFFSET TOP PIVOTS

- **Full Mortise Pivots Are Non-Handed**

3/4" (19) OFFSET TOP PIVOTS

PART NO.	FINISH
CRL9075BS	Brushed Stainless
CRL9075PB	Polished Brass
CRL9075PS	Polished Stainless
CRL9075DU	Dark Bronze

Minimum order: 1 each.

1-1/2" (38) OFFSET TOP PIVOTS

PART NO.	FINISH
95120BS	Brushed Stainless
95120DU	Dark Bronze

Minimum order: 1 each.

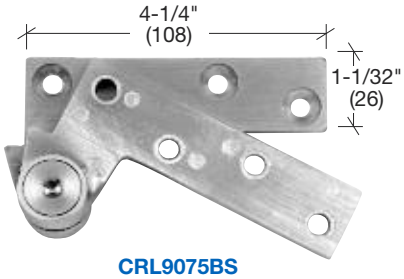

CRL9075BS

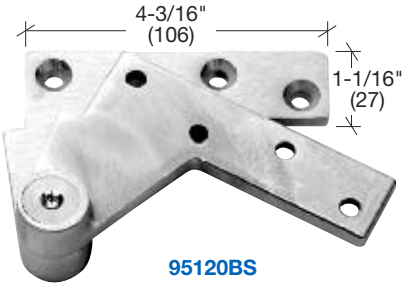

95120BS

Offset Top Pivots are full mortise and non-handed for use with aluminum, wood, and hollow metal doors.

3/4" INTERMEDIATE OFFSET ALUMINUM PIVOT SETS

- **Handed Left or Right for New or Retrofit Use**
- **Available in Four Finishes**

LEFT HAND (RHR) PART NO.	FINISH	RIGHT HAND (LHR) PART NO.
CRL19LHSC	Satin Chrome	CRL19RHSC
CRL19LHPC	Polished Chrome	CRL19RHPC
CRL19LHPB	Polished Brass	CRL19RHPB
CRL19LHDU	Dark Bronze	CRL19RHDU

Minimum order: 1 each.

These 3/4" (19) Intermediate Offset Pivots are for new or retrofit use with standard 1-3/4" (45) storefront aluminum doors to maintain door alignment. These are handed, full-mortise type Pivots, and feature a full race ball bearing and oilite bronze bushing for a long maintenance-free life. They are not intended to be load-bearing pivots. Pivots allow for a 5/8" (16) vertical adjustment, and feature a fully retractable pin for easy installation.

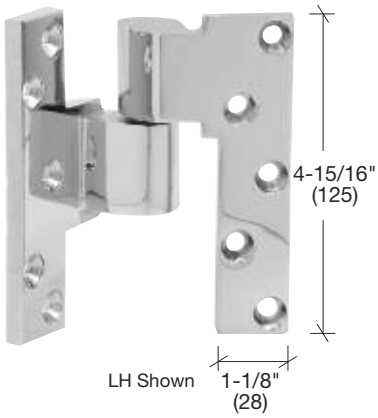

LH Shown

ENTRANCES

Accessories

Door Hinges

4-1/2" X 4" STANDARD WEIGHT BALL BEARING HINGE

- **Stainless Steel**
- **Ideal for Narrow, Medium, and Wide Stile Doors**

These 4-1/2" x 4" (114 x 102) stainless steel Hinges have 1/4" (6.3) radius corners. Ball bearing with non-removable pin, full mortise type hinges are ideal for storefront doors receiving moderate to heavy traffic flow. Hinges are sold separately, with machine screws included.

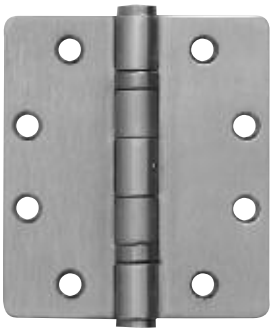

PART NO.	HINGE PIN TYPE	FINISH
DH70911	Non-Removable Pin	Clear
DH70922	Non-Removable Pin	Bronze

Minimum order: 1 each. Sizes and finishes can be combined for quantity pricing.

5" X 4-1/2" HEAVY-DUTY BALL BEARING HINGE

- **Brass Construction**
- **Ideal for Heavy Weight Doors**
- **Accommodates our Durafront Series 800 and 850 Doors**

These 5" x 4-1/2" (127 x 114) heavy-duty brass Hinges have 1/4" (6.3) radius corners. Ball bearing non-removable pins, fully mortise hinges are designed for heavy doors receiving heavy-abusive traffic flow. Hinges are sold separately, with machine screws included.

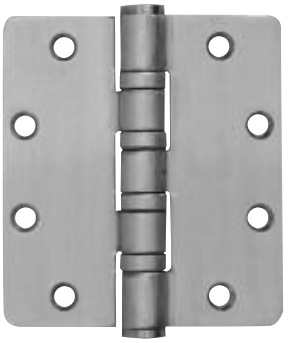

PART NO.	HINGE PIN TYPE	FINISH
DH71911	Non-Removable Pin	Clear
DH71922	Non-Removable Pin	Bronze

Minimum order: 1 each. Sizes and finishes can be combined for quantity pricing.

4-1/2" X 4" STANDARD WEIGHT BALL BEARING HINGE

- **1/4" Radius Corners**

These CRL 4-1/2" x 4" (114 x 102) Hinges have 1/4" (6.3) radius corners. Ball bearing full mortise type Hinges are ideal for medium weight doors receiving average frequency use. Hinges come three per box, with machine screws and wood screws included.

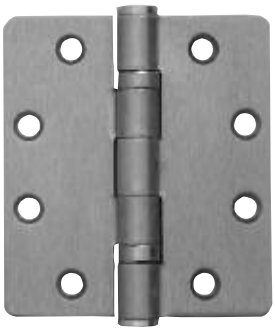

PART NO.	HINGE PIN TYPE	FINISH
BB30A	Removable Pin	Satin Chrome
BB30BRZ	Removable Pin	Bronze
BB35NRPA	Non-Removable Pin	Satin Chrome
BB35NRPBRZ	Non-Removable Pin	Bronze

Minimum order: 1 box. Sizes and finishes can be combined for quantity pricing.

4-1/2" X 4" HEAVY WEIGHT BALL BEARING HINGE

- **1/4" Radius Corners**

These CRL 4-1/2" x 4" (114 x 102) Hinges have 1/4" (6.3) radius corners. Ball bearing full mortise type Hinges are ideal for heavy weight doors receiving high frequency use. Hinges come three per box, with machine screws and wood screws included.

PART NO.	HINGE PIN TYPE	FINISH
BB50A	Removable Pin	Satin Chrome
BB50BRZ	Removable Pin	Bronze
BB55NRPA	Non-Removable Pin	Satin Chrome
BB55NRPBRZ	Non-Removable Pin	Bronze

Minimum order: 1 box. Sizes and finishes can be combined for quantity pricing.

Accessories

Door Hinges and Retainers

UNIVERSAL HINGE REPLACEMENT KIT FOR STOREFRONT DOORS

- **Universal Fit for Both Flush and 1/8" (3) Recessed Doors**
- **Use for Doors Weighing Up to 300 Pounds (136 kg)**
- **Instant Adjustments to Fine Tolerances**
- **Smooth Bearing Action**
- **Self-Lubricating Pin**

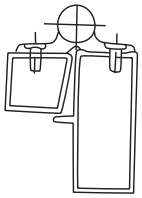

This Universal Hinge Replacement Kit is machined to the close tolerances required for heavy, continuously used commercial doors. The universal fit allows replacement of all storefront hinges without modification on both flush and 1/8" (3) recessed doors. The secure, non-exposed hinge pins cannot be reached, removed or tampered with. The door weight is supported by a case hardened, self-lubricating pin and machine quality anti-friction roller with thrust bearings sealed in oil.

Each Hinge Kit Contains:
Two Hinges; Two 1/8" (3) Thick Shim Plates; Four Screw Cover Plates; 12 One-Way Mounting Screws; One Hex Wrench; Complete Instructions

PART NO.	FINISH
DL1099A	Satin Anodized
DL1099DU	Bronze Anodized

Minimum order: 1 pair.

HEAVY-DUTY MAGNETIC DOOR RETAINER (SURFACE MOUNT TYPE)

- **Up to 50 Pounds (22.7 kg) of Adjustable Holding Strength**
- **Keeps Doors From Blowing Open**
- **Non-Handed**

This Heavy-Duty Magnetic Door Retainer keeps doors closed even during heavy winds. Non-handed retainer provides up to 50 pounds (22.7 kg) of adjustable pull strength once installed. Helps control energy loss, and is easily installed in just minutes. Minimum order is one each.

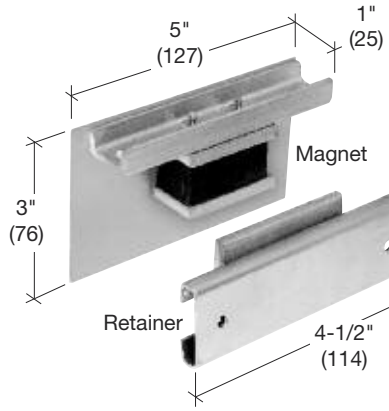

MANUFACTURED IN THE USA BY C.R. LAURENCE
An ISO9001:2008 Certified Company

PART NO. M50

MAGNETIC DOOR RETAINER (MORTISE TYPE)

- **Keeps Doors From Blowing Open**
- **Mortised Into Jamb Head**

This Magnetic Door Retainer has a molded plastic base that holds a magnet, and is mortised into the jamb head. A steel roller is then attached to the top center of the top rail. **NOTE:** Requires a jamb head deep enough to hold the 1-1/8" (28) thick base. Minimum order is one each.

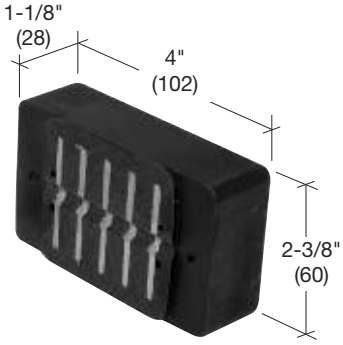

PART NO. 115445

E-Z TONE DOOR CHIME

- **No Electricity or Batteries Needed**

The E-Z Tone can be easily installed on all types of doors and jambs. When the door is opened, a magnetic striker hits the chime bar and produces a pleasant, audible tone.

PART NO.	FINISH
TDK13GRY	Light Gray
TDK13BRZ	Bronze

Minimum order: 1 each.

ENTRANCES

Accessories

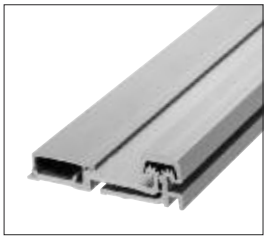

100 and 150 Series
Full Surface Hinges

200 and 250 Series
Full Surface Hinges

300 and 350 Series
Concealed Leaf Hinges

- **Continuous Hinges are Specified by Large Retail Stores and Schools Because of Their Long Service Life**
- **Three Models are Available in Standard or Heavy-Duty Models**
- **Two Finishes – Satin Anodized and Dark Bronze Anodized**

U.S. Aluminum Continuous Hinges are made of high strength aluminum with a full-length rolling gear profile to align doors perfectly from top to bottom. Special self-lubricating polyacetal load bearing blocks deliver smooth, almost floating operation on even the heaviest doors. Hinges are completely secure because all mounting hardware is hidden when installed. Easy-to-install Hinges come with instructions and all necessary hardware for mounting. Replacement Screw Packs are also available separately for on the job repairs.

Continuous Hinges

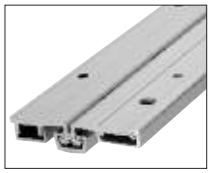

FEATURES AND BENEFITS

All Hinges are anodized after machining is done to provide longer life and reduce corrosion.

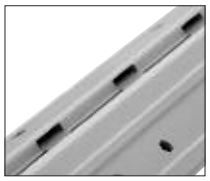

Standard Duty Hinges have 16 load bearing blocks for doors up to 200 pounds (90 kg). Heavy-Duty Hinges have 32 load bearing blocks for doors up to 600 pounds (272 kg) if attached with Riv-Nuts®.

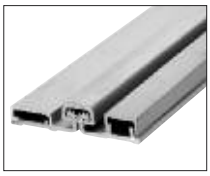

Precision extruded components deliver smooth operation and long life.

Our hole pattern is designed to speed up installations, but still provide the required attachment points needed to carry the weight.

100 AND 150 SERIES FULL SURFACE CONTINUOUS HINGES

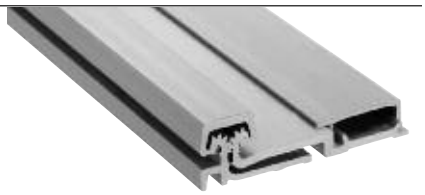

- **Standard Duty Hinges for Doors Weighing Up to 200 Pounds (90 kg)**
- **Heavy-Duty Hinges for Doors Weighing Up to 600 Pounds (272 kg)**
- **Available in Satin Anodized and Dark Bronze Anodized Finishes**

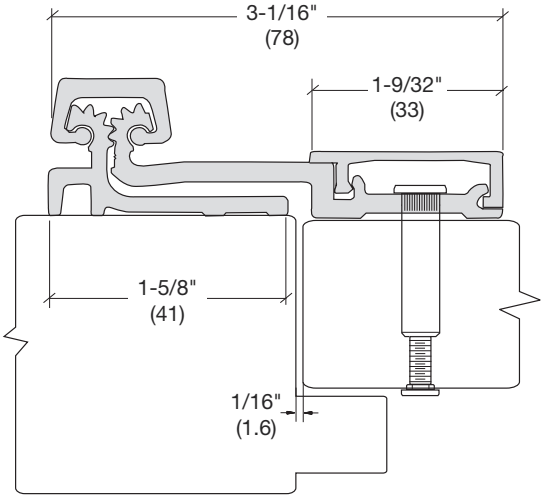

These U.S. Aluminum Full Surface Continuous Hinges have load bearing blocks every 5-1/8" (130) on the Standard Duty Hinge, and every 2-9/16" (65) on the Heavy-Duty Hinge. They are available in satin anodized and dark bronze anodized finishes, and stocked in 83" (2.11 m) lengths. A pack of installation screws is included with each Hinge. Replacement Screw Packs are also available separately.

STANDARD DUTY FULL SURFACE CONTINUOUS HINGES

HINGE PART NO.	HINGE LENGTH	HINGE FINISH	REPLACEMENT SCREW PACK PART NO.
10083A	83" (2.11 m)	Satin Anodized	RSP100A
10083DU	83" (2.11 m)	Dark Bronze Anodized	RSP100DU

HEAVY-DUTY FULL SURFACE CONTINUOUS HINGES

HINGE PART NO.	HINGE LENGTH	HINGE FINISH	REPLACEMENT SCREW PACK PART NO.
15083A	83" (2.11 m)	Satin Anodized	RSP100A
15083DU	83" (2.11 m)	Dark Bronze Anodized	RSP100DU

Minimum order: 1 each. All Continuous Hinges can be combined for quantity pricing.

Accessories

Continuous Hinges

200 AND 250 SERIES FULL SURFACE CONTINUOUS HINGES

- **Standard Duty Hinges for Doors Weighing Up to 200 Pounds (90 kg)**
- **Heavy-Duty Hinges for Doors Weighing Up to 600 Pounds (272 kg)**
- **Available in Satin Anodized and Dark Bronze Anodized Finishes**

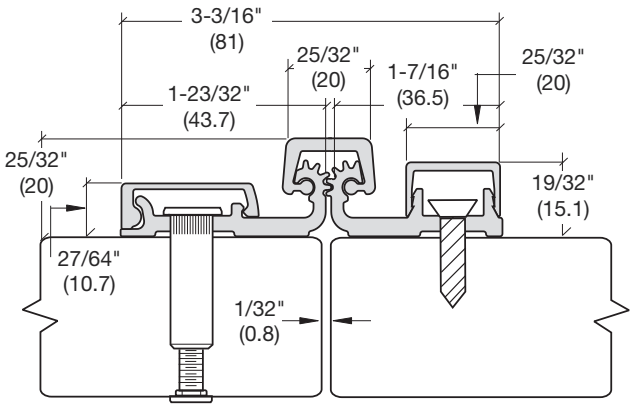

These U.S. Aluminum Full Surface Continuous Hinges have load bearing blocks every 5-1/8" (130.2) on the Standard Duty Hinge, and every 2-9/16" (65.1) on the Heavy-Duty Hinge. They are available in satin anodized and dark bronze anodized finishes, and stocked in 83" (2.11 m) lengths. A pack of installation screws is included with each Hinge. Replacement Screw Packs are also available separately.

STANDARD DUTY FULL SURFACE CONTINUOUS HINGES

HINGE PART NO.	HINGE LENGTH	HINGE FINISH	REPLACEMENT SCREW PACK PART NO.
20083A	83" (2.11 m)	Satin Anodized	RSP200A
20083DU	83" (2.11 m)	Dark Bronze Anodized	RSP200DU

HEAVY-DUTY FULL SURFACE CONTINUOUS HINGES

HINGE PART NO.	HINGE LENGTH	HINGE FINISH	REPLACEMENT SCREW PACK PART NO.
25083A	83" (2.11 m)	Satin Anodized	RSP200A
25083DU	83" (2.11 m)	Dark Bronze Anodized	RSP200DU

Minimum order: 1 each. All Continuous Hinges can be combined for quantity pricing.

300 AND 350 SERIES CONCEALED LEAF CONTINUOUS HINGES

- **Standard Duty Hinges for Doors Weighing Up to 200 Pounds (90 kg)**
- **Heavy-Duty Hinges for Doors Weighing Up to 600 Pounds (272 kg)**
- **Available in Satin Anodized and Dark Bronze Anodized Finishes**

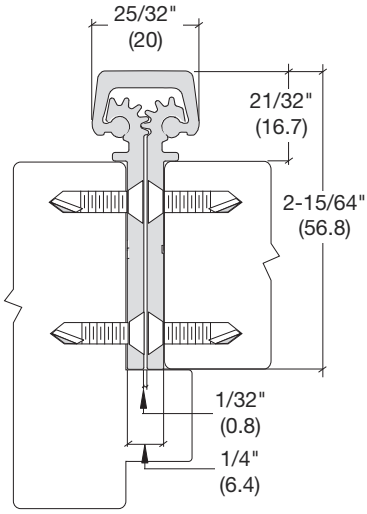

These U.S. Aluminum Concealed Leaf Continuous Hinges have load bearing blocks every 5-1/8" (130.2) on the Standard Duty Hinge, and every 2-9/16" (65.1) on the Heavy-Duty Hinge. They are available in satin anodized and dark bronze anodized finishes, and stocked in 83" (2.11 m) lengths. A pack of installation screws is included with each Hinge. Replacement Screw Packs are also available separately.

STANDARD DUTY CONCEALED LEAF CONTINUOUS HINGES

HINGE PART NO.	HINGE LENGTH	HINGE FINISH	REPLACEMENT SCREW PACK PART NO.
30083A	83" (2.11 m)	Satin Anodized	RSP300A
30083DU	83" (2.11 m)	Dark Bronze Anodized	RSP300DU

HEAVY-DUTY CONCEALED LEAF CONTINUOUS HINGES

HINGE PART NO.	HINGE LENGTH	HINGE FINISH	REPLACEMENT SCREW PACK PART NO.
35083A	83" (2.11 m)	Satin Anodized	RSP300A
35083DU	83" (2.11 m)	Dark Bronze Anodized	RSP300DU

Minimum order: 1 each. All Continuous Hinges can be combined for quantity pricing.

Accessories

Pull Handles and Push Bars

OFFSET PULL HANDLES (SINGLE SIDED)

- **1" (25) Diameter Solid Aluminum Available in Three Finishes**

1" (25) diameter Solid Offset Pull Handles have an overall projection height of 3-1/4" (83), and an offset clearance of 2-1/4" (57). They are supplied with 1/4"–20 thru-bolts and finish washers. All Offset Pulls are packed individually.

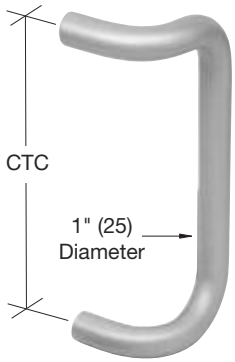

8" (203) CENTER TO CENTER PULL HANDLE

PART NO.	FINISH
M174810B	Oil Rubbed Bronze
M174828	Clear Anodized
M174832D	Brushed Stainless

Minimum order: 1 each.

10" (254) CENTER TO CENTER PULL HANDLE

PART NO.	FINISH
M1741010B	Oil Rubbed Bronze
M1741028	Clear Anodized
M1741032D	Brushed Stainless

Minimum order: 1 each.

OFFSET PULL HANDLES (BACK-TO-BACK)

- **1" (25) Diameter Solid Aluminum Available in Three Finishes**

Extruded solid aluminum 1" (25) diameter Offset Pull Handles have an overall projection height of 3-1/4" (83) and an offset clearance of 2-1/4" (57). Handle sets include mounting hardware for back-to-back installation. Pull Handle sets are packed one each.

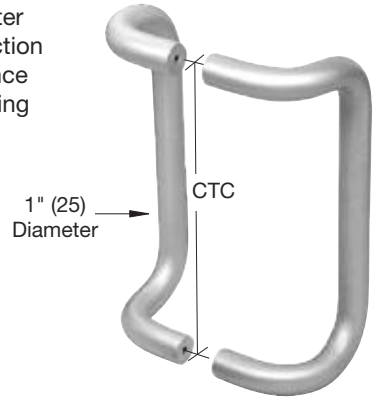

8" (203) CENTER TO CENTER PULL HANDLE

PART NO.	FINISH
M2174810B	Oil Rubbed Bronze
M2174828	Clear Anodized
M2174832D	Brushed Stainless

Minimum order: 1 each.

10" (254) CENTER TO CENTER PULL HANDLE

PART NO.	FINISH
M21741010B	Oil Rubbed Bronze
M21741028	Clear Anodized
M21741032D	Brushed Stainless

Minimum order: 1 each.

OFFSET PULL HANDLE AND PUSH BAR SET

- **1" (25) Diameter Solid Aluminum Available in Three Finishes**
- **Fits 36" (914 mm) Narrow Stile Doors**

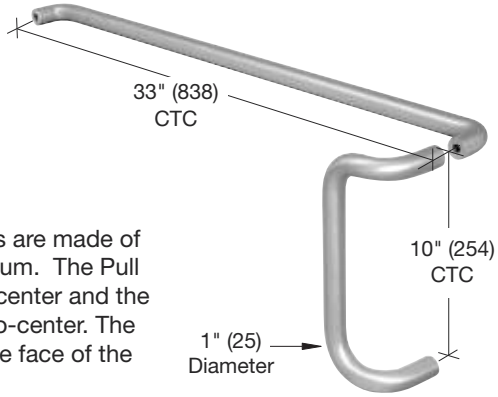

PART NO.	FINISH
M10X3310B	Oil Rubbed Bronze
M10X3328	Clear Anodized
M10X3332D	Brushed Stainless

Minimum order: 1 each.

Solid Push Bar and Pull Handle Sets are made of 1" (25) diameter solid extruded aluminum. The Pull Handle measures 10" (254) center-to-center and the Push Bar measures 33" (838) center-to-center. The projection height is 2-1/4" (57) from the face of the door. Packed one set each.

SOLID PUSH BARS

- **1" (25) Diameter Solid Aluminum Available in Three Finishes**

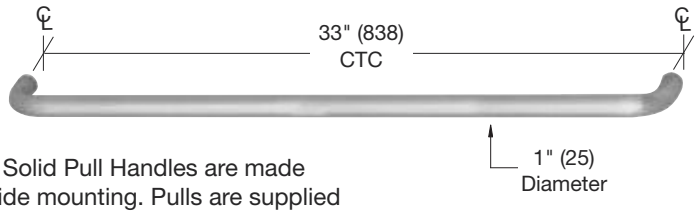

PART NO.	FINISH
M1653310B	Oil Rubbed Bronze
M1653328	Clear Anodized
M1653332D	Brushed Stainless

Minimum order: 1 each.

1" (25) diameter Solid Pull Handles are made for standard one side mounting. Pulls are supplied with 1/4"–20 thru-bolts and finish washers, and are packed individually.

Accessories

Pull Handles and Push Bars

EXTRUDED ALUMINUM PULL HANDLES

- **Solid Aluminum Handle Mounts to Door With Concealed Fasteners**

The Extruded Aluminum Pull Handle comes with two studs that are tapped (1/4"-20 thread) into the aluminum door frame on 10" (254) centers. Then the Handle is slipped over the studs and secured with Allen screws to provide a concealed fastener look. Available in choice of satin anodized and dark bronze finishes. One per package.

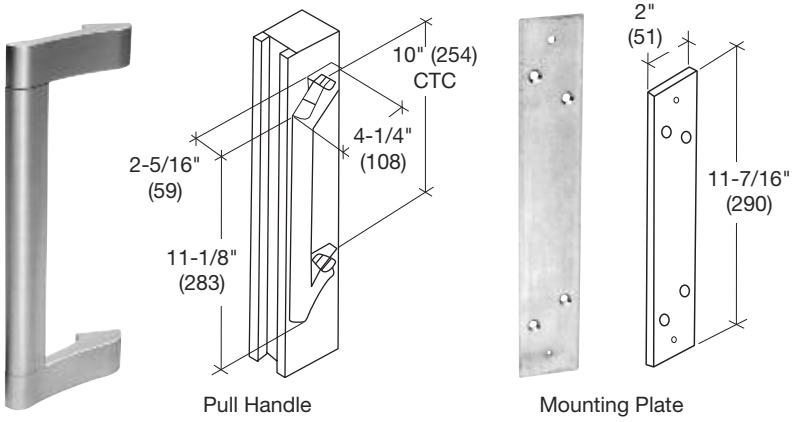

Pull Handle

Mounting Plate

DL915 EXTRUDED ALUMINUM PULL HANDLE

PART NO.	FINISH
DL915A	Satin Anodized
DL915DU	Dark Bronze

Minimum order: 1 each.

DL916 OPTIONAL MOUNTING PLATE

PART NO.	FINISH
DL916A	Satin Anodized
DL916DU	Dark Bronze

Minimum order: 1 each.

EXTRUDED ALUMINUM PUSH BARS

- **Available in Three Lengths and Two Finishes**

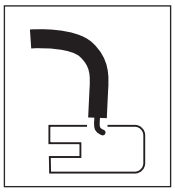

J-Hook Mount

Extruded Aluminum Push Bars come with a "J" Hook on one end. The opposite end needs to be drilled at time of installation to match application. Bar measures 1/2" x 1-1/4" (12.7 x 31.7). One per package.

PART NO.	FITS UP TO:	FINISH
DL9530A	36" (914) Doors	Satin Aluminum
DL9530DU	36" (914) Doors	Bronze Anodized
DL9535A	42" (1067) Doors	Satin Aluminum
DL9535DU	42" (1067) Doors	Bronze Anodized
DL9540A	48" (1219) Doors	Satin Aluminum
DL9540DU	48" (1219) Doors	Bronze Anodized

Minimum order: 1 each.

SEX BOLTS

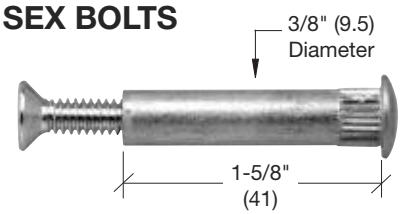

Used for securing push bars, surface mounted door closers, and other fixtures to 1-3/4" (44.5) doors. Knurled barrel fits a 3/8" (9.5) diameter hole. Available in aluminum and bronze finishes. Four bolts per package.

- **1/4"-20 Thread Size**

PART NO.	THREAD SIZE	FINISH
8025	1/4" - 20	Satin Aluminum
8025BRZ	1/4" - 20	Bronze Anodized

Minimum order: 1 pack. All Sex Bolts can be combined for quantity pricing.

LADDER PULL HANDLES

- **A Variety of Styles and Sizes in Brushed or Polished Stainless Steel**
- **Suitable for Narrow, Medium, and Wide Stile Doors, as Well as 'All-Glass' Entrance Doors**

Ladder Pull Handles are available in a variety of designs, sizes, and finishes to suit the requirements of metal framed and all-glass doors. Consult the **crlaurence.com** web site for specs and ordering details.

Straight and "S" Style Handles in Lengths of Up to 84" (2.13 m)

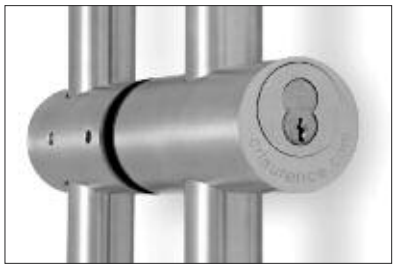

- **Also Available for Use in 'All-Glass' Entrance Doors is a Full Selection of Locking Ladder Pulls**

ENTRANCES

Accessories

SINGLE MORTISE KEY CYLINDERS

- 1" (25) Length 5-Pin Cylinder; 1-5/32" (29.4) Diameter
- AR MS - Type Cam
- Core Face and Keys US26D

The Single Mortise Key Cylinder comes with two keys in either Schlage "C" or Yale "8" keyway configurations. They are available keyed different or keyed alike in satin aluminum or dark bronze finishes. One per package. Zinc construction.

PART NO.	KEYWAY	KEYED	CYLINDER RING*	FINISH
DL2170SCKDA	Schlage "C"	Different	3/16" (4.8)	Satin Aluminum
DL2170SCKAA	Schlage "C"	Alike	3/16" (4.8)	Satin Aluminum
DL2170SCKDDU	Schlage "C"	Different	3/16" (4.8)	Dark Bronze
DL2170SCKADU	Schlage "C"	Alike	3/16" (4.8)	Dark Bronze
DL2170Y8KDA	Yale "8"	Different	3/16" (4.8)	Satin Aluminum
DL2170Y8KAA	Yale "8"	Alike	3/16" (4.8)	Satin Aluminum
DL2170Y8KDDU	Yale "8"	Different	3/16" (4.8)	Dark Bronze
DL2170Y8KADU	Yale "8"	Alike	3/16" (4.8)	Dark Bronze

Minimum order: 1 each. *Standard with cylinder. 5/32" and 7/32" rings can be ordered separately.
All Mortise Key Cylinders can be combined for quantity pricing.

RIM KEY CYLINDERS

- Low Profile Cylinder Ring and Adapter Plate Standard
- Core Face and Keys US26D
- 5-Pin Cylinder

This Rim Cylinder comes with two keys in the Schlage "C" keyway configuration. 1-7/8" (47.6) break-away screws and 1-1/4" (31.8) break-away spindle standard. They are available keyed different or keyed alike in satin aluminum or dark bronze finishes. One per package.

PART NO.	KEYWAY	KEYED	CYLINDER RING	FINISH
DL911SCKDA	Schlage "C"	Different	3/32" (2.4)	Satin Aluminum
DL911SCKAA	Schlage "C"	Alike	3/32" (2.4)	Satin Aluminum
DL911SCKDDU	Schlage "C"	Different	3/32" (2.4)	Dark Bronze
DL911SCKADU	Schlage "C"	Alike	3/32" (2.4)	Dark Bronze

Minimum order: 1 each. All Rim Key Cylinders can be combined for quantity pricing.

Cylinders

DRA SERIES MORTISE KEY CYLINDERS

- Supplied With Longer Cam
- Brass Construction

This keyed DRA Series Mortise Key Cylinder is supplied with the longer DRA10CAM recommended for use with the Locking Flat Lever Outside Trim on page 25-H9. Cylinders are keyed alike and supplied with two keys. Brass construction.

PART NO.	KEYWAY	KEYED	CYLINDER RING	FINISH
DRA10SA	Schlage "C"	Alike	5/32" (4)	Satin Aluminum
DRA10DU	Schlage "C"	Alike	5/32" (4)	Dark Bronze

Minimum order: 1 each. All Mortise Key Cylinders can be combined for quantity pricing.

CYLINDER MOUNTING PADS

- For Mounting Mortise Key Cylinders
- Includes Locking Ring
- Two Finishes

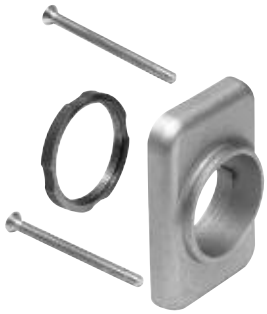

Cylinder Mounting Pads are used with Standard Mortise Key Cylinders with a MS Type Cam on Concealed Vertical Rod Panic Devices to allow key access from outside. One per package. Mounting screws included.

PART NO.	WIDTH	HEIGHT	FINISH
DL913A	1-11/16" (42.9)	2-1/2" (63.5)	Satin Aluminum
DL913DU	1-11/16" (42.9)	2-1/2" (63.5)	Dark Bronze

Minimum order: 1 each. Finishes can be combined for quantity pricing.

JACKSON CYLINDER MOUNTING PAD

- For Mounting Mortise Key Cylinders on Jackson Panic Exit Devices

The Jackson Cylinder Mounting Pad with locking ring is for use with our Part No. DL2170 Series Mortise Key Cylinder for keyed entry on our 1085 and 2085 Series Concealed Vertical Rod Panic Exit Devices.

PART NO.	WIDTH	HEIGHT	FINISH
30821J628	1-5/8" (41.3)	2-1/2" (63.5)	Satin Aluminum
30821J313	1-5/8" (41.3)	2-1/2" (63.5)	Dark Bronze

Minimum order: 1 each. Finishes can be combined for quantity pricing.

Accessories

CYLINDER GUARD

- **Hardened Steel Security Ring**
- **Free Spinning Beveled Collar**
- **For Standard Face 5-Pin, 1-5/32" (29.4) Mortise Key Cylinder**
- **For Use on Aluminum Doors**

The beveled collar, free spinning, hardened steel Cylinder Guard is used to prevent the removal of the lock cylinder with pliers or a pipe wrench. Cylinder Guard is furnished with retaining clip and two spacers. Available in aluminum or bronze finishes. One per package.

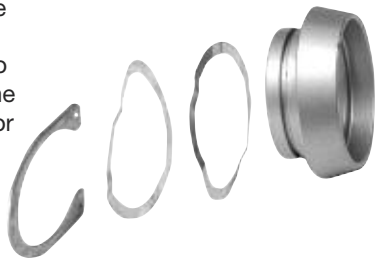

PART NO.	COLLAR HEIGHT	FINISH
DL2174A	3/8" (9.5)	Aluminum
DL2174DU	3/8" (9.5)	Bronze

Minimum order: 1 each. Finishes can be combined for quantity pricing.

DOUBLE MORTISE KEY CYLINDER

- **1" Length 5-Pin Cylinder; 1-5/32" (29.4) Diameter**
- **AR MS-Type Cam**
- **Available Keyed Alike or Differently in Two Keyway Configurations**

Our Double Mortise Key Cylinder comes with two keys in either Schlage "C" or Yale "8" keyway configurations. 1-5/32" (29.4) diameter, 1" (25) long 5-Pin Cylinder; AR MS – Type Cam; Core Face and Keys US26D. Die cast zinc construction. Includes 3/16" (4.8) cylinder rings. One pair per package.

PART NO.	KEYWAY	KEYED	FINISH
DL2171SCKDA	Schlage "C"	Different	Aluminum
DL2171SCKAA	Schlage "C"	Alike	Aluminum
DL2171SCKDDU	Schlage "C"	Different	Bronze
DL2171SCKADU	Schlage "C"	Alike	Bronze
DL2171Y8KDA	Yale "8"	Different	Aluminum
DL2171Y8KAA	Yale "8"	Alike	Aluminum
DL2171Y8KDDU	Yale "8"	Different	Bronze
DL2171Y8KADU	Yale "8"	Alike	Bronze

Minimum order: 1 each. All Mortise Cylinders can be combined for quantity pricing.

Cylinders

MORTISE THUMBTURN CYLINDER

- **1" Length 5-Pin Cylinder; 1-5/32" (29.4) Diameter**
- **AR MS - Type Cam**
- **Activates Cylinder Lock Without a Key**

The Mortise Thumbturn Cylinder is used to activate the lock without the need for a key. 1-5/32" (29.4) diameter, 1" (25) long 5-Pin Cylinder. Die cast zinc construction. Includes a 3/16" (4.8) cylinder ring. One per package.

PART NO.	FINISH
DL2172A	Aluminum Face with Aluminum Turn
DL2172DU	Bronze Face with Aluminum Turn
DL2178DU	Bronze Face with Bronze Turn

Minimum order: 1 each. All Mortise Cylinders can be combined for quantity pricing.

MORTISE DUMMY CYLINDER

- **No Keyway or Cam**
- **Fills Abandoned Cylinder Holes**

The Mortise Dummy Cylinder is used to fill in a cylinder hole that has been abandoned or is not going to be used. Available in aluminum or bronze finishes. 1-5/32" (29.4) diameter, 7/8" (22.2) long Cylinder. Die cast zinc construction. Includes a 3/16" (4.8) thick cylinder ring. One per package.

PART NO.	FINISH
DL2173A	Aluminum
DL2173DU	Bronze

Minimum order: 1 each. All Mortise Cylinders can be combined for quantity pricing.

LOCK INDICATOR SET

- **Use With DL2100 Series Deadlocks and AR MS WSeries Deadlocks**
- **Up Position Shows OPEN in Green Letters, Down Position Shows LOCKED in Red Letters**
- **Includes 26" x 1-1/2" Header Sign**

PART NO.	FINISH
DL2177A	Aluminum
DL2177DU	Bronze

Minimum order: 1 each. Finishes can be combined for quantity pricing.

THIS DOOR TO REMAIN UNLOCKED DURING BUSINESS HOURS

For use with CRL and AR MS deadlocks on aluminum doors. Vertical actuator slide on back is in the down position when Indicator reads "LOCKED". Includes one Lock Indicator and one Header Sign. Indicator is 1-5/16" (33) wide x 2-3/16" (55.5) tall. One per package.

ENTRANCES

Accessories

Deadlocks and Deadlatch Locks

LONG THROW DEADLOCKS

- 1-3/8" (34.9) Throw
- Cylinder Backsets: 31/32" or 1-1/8" (24.6 or 28.6)
- Throw Bolt Made of 5-Ply Laminated Steel With Center 3-Ply Hardened Case Plus Hardened Roller Pin to Resist Hacksaw
- Lock Accepts Standard 1-5/32" (29.4) Diameter Mortise Key or Thumbturn Cylinders With AR MS-Type Cam
- Faceplate (Optional)

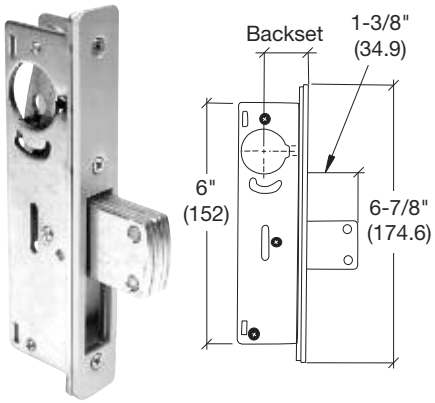

PART NO.	BACKSET	HANDED
DL2110A	31/32" (24.6)	Non-Handed
DL2110B	1-1/8" (28.6)	Non-Handed

Minimum order: 1 each. All Deadlocks and Faceplates can be combined for quantity pricing.

HOOK THROW DEADLOCKS

- 13/16" (20.6) Throw
- Cylinder Backsets: 31/32" or 1-1/8" (24.6 or 28.6)
- Throw Bolt Made of 5-Ply Laminated Steel With Center 3-Ply Hardened Case Plus Hardened Roller Pin to Resist Hacksaw
- Lock Accepts Standard 1-5/32" (29.4) Diameter Mortise Key or Thumbturn Cylinders With AR MS-Type Cam
- Faceplate (Optional)

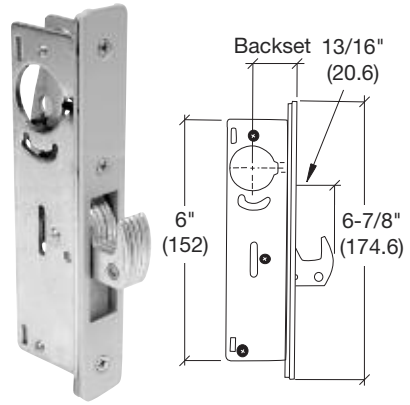

PART NO.	BACKSET	HANDED
DL2130A	31/32" (24.6)	Non-Handed
DL2130B	1-1/8" (28.6)	Non-Handed

Minimum order: 1 each. All Deadlocks and Faceplates can be combined for quantity pricing.

DEADLATCH LOCKS

- 1/2" (12.7) Throw
- Cylinder Backsets: 31/32" or 1-1/8" (24.6 or 28.6)
- Field Reversible for Opposite Hand
- Key Controlled Dogging
- Lock Accepts Standard 1-5/32" (29.4) Diameter Mortise Key or Thumbturn Cylinders With AR MS-Type Cam
- Faceplate and Strike (Optional)

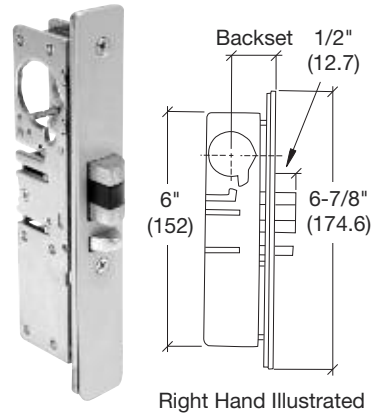

Right Hand Illustrated

PART NO.	BACKSET	HANDED*
DL2140ALH	31/32" (24.6)	Left
DL2140ARH	31/32" (24.6)	Right
DL2140BLH	1-1/8" (28.6)	Left
DL2140BRH	1-1/8" (28.6)	Right

Minimum order: 1 each. All Deadlocks and Faceplates can be combined for quantity pricing. * See page 19-H9 for Handing Chart.

OPTIONAL FACEPLATES

- For Use With All Deadlocks and Deadlatch Locks Above
- All Faceplates Measure 1" x 6-7/8" (25.4 x 174.6)

For DL2110 Series Long Throw Deadlocks

For DL2130 Series Hook Throw Deadlocks

For DL2140 Series Deadlatch Locks

FACEPLATE STYLES

Flat | Radius | Radius Weatherstripped | Left Hand Beveled* | Right Hand Beveled*

USE WITH LOCK SERIES	FINISH	PART NO.	PART NO.	PART NO.	PART NO.	PART NO.
DL2110 Deadlock	Aluminum	DL2111A	DL2112A	DL2113A	DL2114A	DL2115A
DL2110 Deadlock	Dark Bronze	DL2111DU	DL2112DU	DL2113DU	DL2114DU	DL2115DU
DL2130 Deadlock	Aluminum	DL2131A	DL2132A	DL2133A	DL2134A	DL2135A
DL2130 Deadlock	Dark Bronze	DL2131DU	DL2132DU	DL2133DU	DL2134DU	DL2135DU
DL2140 Deadlatch	Aluminum	DL2141A	DL2142A	DL2143A	DL2144A	DL2145A
DL2140 Deadlatch	Dark Bronze	DL2141DU	DL2142DU	DL2143DU	DL2144DU	DL2145DU

Minimum order: 1 each. All Deadlocks and Faceplates can be combined for quantity pricing. * See page 19-H9 for Handing Chart.

Accessories

Deadlocks and Deadlatch Locks

ADAMS RITE LONG THROW DEADLOCKS

- **1-3/8" (34.9) Throw**
- **Cylinder Backsets: 31/32" or 1-1/8" (24.6 or 28.6)**

Throw bolt made of 8-ply laminated stainless steel. Center ply has alumina-ceramic core to defeat any hacksaw attack, including rod-type "super hacksaws". Lock accepts standard 1-5/32" (29.4) diameter mortise key or thumbturn cylinders with AR MS-Type Cam. Faceplates (optional) shown below.

Adams Rite
ASSA ABLOY

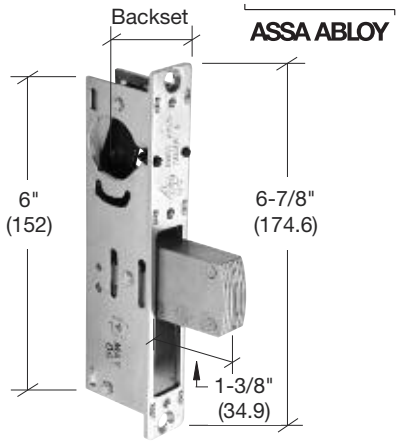

PART NO.	BACKSET	HANDED
MS18532	31/32" (24.6)	Non-Handed
MS18533	1-1/8" (28.6)	Non-Handed

Minimum order: 1 each. All Deadlocks and Faceplates can be combined for quantity pricing.

ADAMS RITE HOOK THROW DEADLOCKS

- **13/16" (20.6) Throw**
- **Cylinder Backsets: 31/32" or 1-1/8" (24.6 or 28.6)**

Throw bolt made of 8-ply laminated stainless steel. Center ply has alumina-ceramic core to defeat any hacksaw attack, including "super hacksaws". Hook shape repels prybar attempts. Lock accepts standard 1-5/32" (29.4) diameter mortise key or thumbturn cylinders with AR MS-Type Cam. Faceplates (optional) shown below.

Adams Rite
ASSA ABLOY

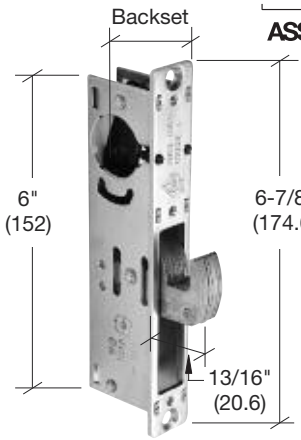

PART NO.	BACKSET	HANDED
MS1853H2	31/32" (24.6)	Non-Handed
MS1853H3	1-1/8" (28.6)	Non-Handed

Minimum order: 1 each. All Deadlocks and Faceplates can be combined for quantity pricing.

ADAMS RITE DEADLATCH LOCKS

- **1/2" (12.7) Throw**
- **Cylinder Backsets: 31/32" or 1-1/8" (24.6 or 28.6)**

Field Reversible for Opposite Hand.Key-Controlled Dogging. Lock accepts standard 1-5/32" (29.4) diameter mortise key or thumbturn cylinders with AR MS-Type Cam. Faceplates (optional) shown below.

Adams Rite
ASSA ABLOY

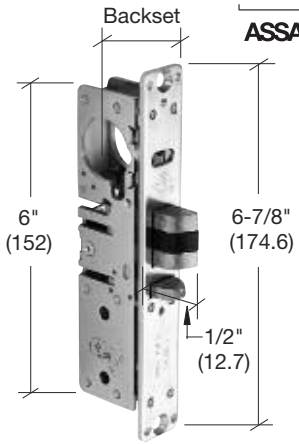

PART NO.	BACKSET	HANDED*
AR45132L	31/32" (24.6)	Left
AR45132R	31/32" (24.6)	Right
AR45133L	1-1/8" (28.6)	Left
AR45133R	1-1/8" (28.6)	Right

Minimum order: 1 each. All Deadlocks and Faceplates can be combined for quantity pricing. * See page 19-H9 for Handing Chart.

ADAMS RITE OPTIONAL FACEPLATES

- **For Use With All Deadlocks and Deadlatch Locks Above**
- **All Faceplates Measure 1" x 6-7/8" (25.4 x 174.6)**

For MS1853 Series Long Throw Deadlocks

For MS1853H Series Hook Throw Deadlocks

For AR4513 Series Deadlatch Locks

FACEPLATE STYLES

Flat | Radius | Left Hand Beveled* | Right Hand Beveled*

USE WITH LOCK SERIES	FINISH	PART NO.	PART NO.	PART NO.	PART NO.
MS1853 Deadlock	Aluminum	18010AL	18110AL	18210AL	18310AL
MS1853 Deadlock	Dark Bronze	18010DU	18110DU	18210DU	18310DU
MS1853H Deadlock	Aluminum	18020AL	18120AL	18220AL	18320AL
MS1853H Deadlock	Dark Bronze	18020DU	18120DU	18220DU	18320DU
AR4513 Deadlatch	Aluminum	450220AL	451220AL	452220AL	453220AL
AR4513 Deadlatch	Dark Bronze	450220DU	451220DU	452220DU	453220DU

Minimum order: 1 each. All Deadlocks and Faceplates can be combined for quantity pricing. * See page 19-H9 for Handing Chart.

Adams Rite is a registered trademark of Adams Rite Manufacturing Co., an ASSA ABLOY Group Company.

ENTRANCES

Accessories

Electric Strikes

ELECTRIC STRIKE

- **Non-Handed**
- **Finished Faceplate Included**

This CRL Electric Strike offers superior strength and smooth operation. The standard Strike is a fail-secure model requiring power to open the latch. Faceplates are available in two standard finishes.

PART NO.	FACEPLATE FINISH
ST125A	Aluminum
ST125DU	Dark Bronze

Minimum order: 1 each. Finishes can be combined for quantity pricing.

SPECIFICATIONS
Input: 12V DC
Current Draw: 360mA @ 12V DC
Dimensions: Faceplate - Flat = 1-1/4" x 4-7/8" (32 x 124)
Case: 1" x 3-7/8" x 1-1/2" (25 x 98 x 38)
Strike Opening: 5/8" x 1-11/16" x 1/2" (16 x 43 x 13)
Fail-Secure Lock: Requires Power to Unlock

ADAMS RITE 7100 ELECTRIC STRIKE

UL Listed for Burglary Resistance

Adams Rite
ASSA ABLOY

- **Non-Handed**
- **12V DC or 24V DC Models**
- **UL Listed for Burglary Resistance**

This Adams Rite Electric Strike provides for remote electrical actuation to unlock the strike jaw and release the latchbolt for entry without operating the latch. The standard Strike is supplied in fail-secure mode, but is field convertible to fail-safe. Standard 7100 Strike has lip of proper length for 1-3/4" (44) thick door that closes flush with jamb edge. Strikes are supplied with a finished flat faceplate.

SPECIFICATIONS
Input: 12V DC or 24V DC
Current Draw: .33A @ 12V DC .17A @ 24V DC
Dimensions: Faceplate - Flat = 1-1/4" x 4-7/8" (32 x 124)
Case: 1" x 3-3/8" x 1-5/8" (25 x 86 x 41)
Strike Opening: 5/8" x 1-7/16" x 1/2" (16 x 37 x 13)
Shipped as Fail-Secure Lock: Requires Power to Unlock
Field Convertible from one mode to the other.

The 7100 Electric Strike has a lip of proper length for a 1-3/4" (44) thick door that closes flush with the jamb edge. Where door thickness or jamb depth differs, Lip Extension Kits are available for field modification.

ELECTRIC STRIKES

12V DC PART NO.	24V DC PART NO.	FACEPLATE FINISH
7100310A	7100510A	Aluminum
7100310DU	7100510DU	Dark Bronze

Minimum order: 1 each. Strikes can be combined for quantity pricing.

LIP EXTENSION KITS

PART NO.	JAMB SIZE
91017105	4" (102)
91017107	4-1/2" (114)
91017113	6" (152)

Minimum order: 1 each.

Adams Rite is a registered trademark of Adams Rite Manufacturing Co., an ASSA ABLOY Group Company.

POWER SUPPLIES, TRANSFORMERS, AND RECTIFIERS

Converts 120 VAC current to 12 or 24 VAC. Can be mounted to a standard electrical junction box.

Transformer
PART NO. DH46100

Converts 120 VAC current to 24 VAC (40VA) only. Plugs into a standard wall outlet.

Plug-In Transformer
PART NO. DH46200

2 amp rated rectifier converts low voltage AC current DC of same voltage.

Rectifier
PART NO. DH46000

Provides a secure and unobtrusive means of channeling electrical wiring from the door frame into the door itself. Suitable for doors with butt or continuous hinges or 3/4" (19) offset pivots. Not compatible with center pivot hinges.

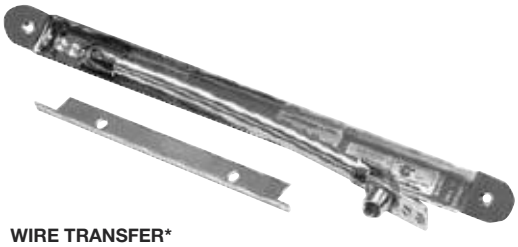

WIRE TRANSFER*

PART NO.	DOOR SWING	LENGTH
DH46311	105°	11-1/2" (292)
DH46411	180°	20-5/8" (524)

Minimum order: 1 each. *Chrome Finish.

Accessories

ADAMS RITE HOOK THROW DEADBOLT/LATCH

- **13/16" (20.6) Throw**
- **Cylinder Backset: 1-1/8" (28.6)**

Throw bolt made of 5-ply laminated stainless steel. Center ply has alumina-ceramic core to defeat any hacksaw attack, including "super hacksaws". Hook shape repels prybar attempts. Lock accepts standard 1-5/32" (29.4) diameter mortise key or thumbturn cylinders with AR MS-Type Cam. Typical installation is a bank or store requiring three modes of door control:

1. Both lock and latch bolts retracted for unrestricted entry and exit during business hours.
2. Handle-operated latch for exit-only traffic just after closing.
3. Maximum security hookbolt for overnight lockup.

Adams Rite
ASSA ABLOY

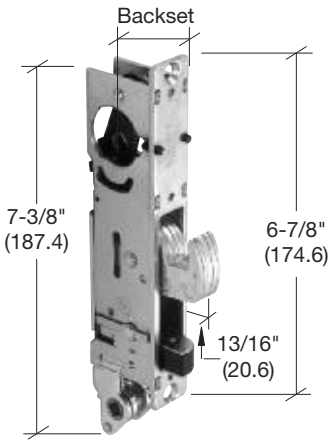

PART NO.	BACKSET	HANDED
DH18900L	1-1/8" (28.6)	Left
DH18900R	1-1/8" (28.6)	Right

Minimum order: 1 each. All Deadlocks and Faceplates can be combined for quantity pricing. Faceplates sold separately.

Door Handing is Determined from Outside or Key (Secure) Side of the Door.

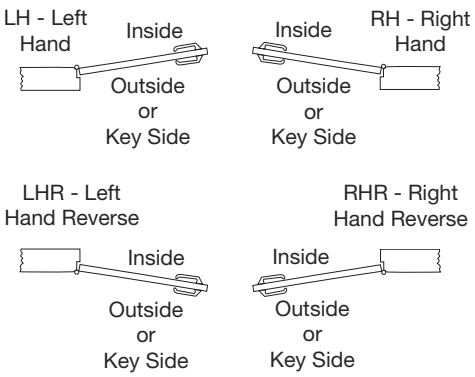

ADAMS RITE OPTIONAL FACEPLATES

- **For Use With Deadbolt/Latch Locks Above**
- **All Faceplates Measure 1" x 6-7/8" (25 x 174.6)**

Adams Rite
ASSA ABLOY

Faceplate Styles

Left Hand Beveled — Right Hand Beveled

For Offset Hung Single Door

PART NO.	PART NO.	FINISH	USE WITH LOCK SERIES
DH19111L	DH19111R	Aluminum	**DH18900** Deadbolt/Latch
DH19122L	DH19122R	Dark Bronze	**DH18900** Deadbolt/Latch

Minimum order: 1 each. All Deadlocks and Faceplates can be combined for quantity pricing.

Radius Weatherstripped

For Center Hung Single Door

PART NO.	FINISH	USE WITH LOCK SERIES
DH19211	Aluminum	**DH18900** Deadbolt/Latch
DH19222	Dark Bronze	**DH18900** Deadbolt/Latch

Minimum order: 1 each. All Deadlocks and Faceplates can be combined for quantity pricing.

Adams Rite is a registered trademark of Adams Rite Manufacturing Co., an ASSA ABLOY Group Company.

Deadbolt/Latch

FRAME LOCK STRIKES FOR ADAMS RITE HOOK THROW DEADBOLT/LATCH SERIES DH18900

- **Four Models Available**
- **Brushed Stainless Steel**
- **Includes Dust Box and Mounting Screws**

Lock Strike Loose
For inactive door stile.
PART NO. DH19400
Minimum order: 1 each.

Lock Strike Loose
For center hung door 4" frame.
PART NO. DH19500
Minimum order: 1 each.

Lock Strike Loose
For center hung door 4-1/2" frame.
PART NO. DH19600
Minimum order: 1 each.

Lock Strike Loose
For offset hung door frame.
PART NO. DH19300
Minimum order: 1 each.

FRAME LOCK STRIKES FOR DEADBOLT/LATCH SERIES DL2140 AND AR4513

- **Four Models Available**
- **Brushed Stainless Steel**
- **Includes Dust Box and Mounting Screws**

Lock Strike Loose
For offset hung door frame.
PART NO. DH02800
Minimum order: 1 each.

Lock Strike Loose
For center hung door 4" frame.
PART NO. DH12700
Minimum order: 1 each.

Lock Strike Loose
For center hung door 4-1/2" frame.
PART NO. DH12600
Minimum order: 1 each.

Lock Strike Loose
For inactive door stile.
PART NO. DH12800
Minimum order: 1 each.

ENTRANCES

Accessories

UNIVERSAL PUSH-PULL PADDLES

- **Field Reversible for Left or Right Hand Installations**
- **Fits DL2140 Series, Adams Rite, S. Parker, I.D.C., Global, and Primeline Deadlatches**
- **Available in Six Finishes**

Cam Plug Included

Push to the Right Paddle Shown

The Universal Push-Pull Paddle comes with cartridges which allow it to be applied to push or pull, left or right handed doors. It fits deadlatches with backsets from 7/8" (22.2) to 1-1/2" (38.1). Simple to follow instructions allow field reversal to meet your needs. Comes complete with cam plug, push and pull indicators, mounting screws, templates and directions. Measures approximately 5" x 4" (127 x 102). Buying the paddle to meet your specifications from the chart below eliminates disassembling and reassembling internal parts. One per package.

OPERATION	PART NO.	OPERATION	FINISH
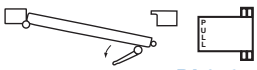 Pull to Left — DL2161 Series	DL2161A	Pull Left/Push Right	Aluminum
	DL2161DU	Pull Left/Push Right	Bronze
	DL2161BR	Pull Left/Push Right	Brass
	DL2161CH	Pull Left/Push Right	Chrome
	DL2161BN	Pull Left/Push Right	Brushed Nickel
	DL2161SC	Pull Left/Push Right	Satin Chrome
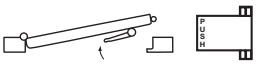 Push to Left — DL2162 Series	DL2162A	Push Left/Pull Right	Aluminum
	DL2162DU	Push Left/Pull Right	Bronze
	DL2162BR	Push Left/Pull Right	Brass
	DL2162CH	Push Left/Pull Right	Chrome
	DL2162BN	Push Left/Pull Right	Brushed Nickel
	DL2162SC	Push Left/Pull Right	Satin Chrome
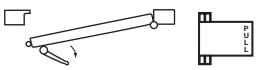 Pull to Right — DL2163 Series	DL2163A	Pull Right/Push Left	Aluminum
	DL2163DU	Pull Right/Push Left	Bronze
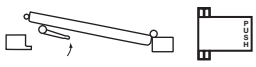 Push to Right — DL2164 Series	DL2164A	Push Right/Pull Left	Aluminum
	DL2164DU	Push Right/Pull Left	Bronze

Minimum order: 1 each. All Paddles and Lever Handles can be combined for quantity pricing.

CAM PLUG

- **For Use With Push-Pull and Lever Handles**
- **Non-Handed, Reversible**

The Cam Plug works with DL2160 Series Paddles and DL2150 Series Lever Handles. Interfaces with all CRL Deadlatches. One per package. Minimum order is one each.

PART NO. DL2165

Paddles and Handles

LEVER HANDLES

- **Field Reversible for Left or Right Hand Installations**
- **Fits DL2140 Series, Adams Rite, S. Parker, I.D.C., Global, and Primeline Deadlatches**
- **Available in Six Finishes**

Cam Plug Included

Turning lever downward will activate deadlatch. Heavy-duty spring will return the lever automatically to fully horizontal position. The escutcheon is 1-3/8" x 4" (35 x 102), with a 1/4" (6.3) square hardened spindle that interlocks in the cam plug. One per package.

PART NO.	HANDING	FINISH
DL2150LHA	Left	Aluminum
DL2150LHBN	Left	Brushed Nickel
DL2150LHBR	Left	Brass
DL2150LHCH	Left	Chrome
DL2150LHDU	Left	Bronze
DL2150LHSC	Left	Satin Chrome
DL2150RHA	Right	Aluminum
DL2150RHBN	Right	Brushed Nickel
DL2150RHBR	Right	Brass
DL2150RHCH	Right	Chrome
DL2150RHDU	Right	Bronze
DL2150RHSC	Right	Satin Chrome

Minimum order: 1 each. All Paddles and Lever Handles can be combined for quantity pricing.

ADAMS RITE LEVER HANDLES

- **Anti-Snag Lever Handle**
- **Field Reversible For Right or Left Hand Installations**
- **Fits DL2140 Series, AR4513 Series, and DH189 Series Locks**
- **Available in Three Finishes**

The handle is designed with a modern touch of elegance featuring a anti-snag returned lever handle adapted for all storefront doors 1-3/4" (44) thick. Rehanding in the field is easily accomplished.

Cam Plug Included

PART NO.	HANDING	FINISH
DH56911L	Left	Clear
DH56922L	Left	Bronze
DH56925L	Left	Champagne
DH56911R	Right	Clear
DH56922R	Right	Bronze
DH56925R	Right	Champagne

Minimum order: 1 each. All Paddles and Lever Handles can be combined for quantity pricing.

Adams Rite is a registered trademark of Adams Rite Manufacturing Co., an ASSA ABLOY Group Company.

Accessories

Header Bolt Kits

HEADER BOLT KIT

- 5/8" (15.9) Throw Expanding Top Bolt
- Inactive Door Lock

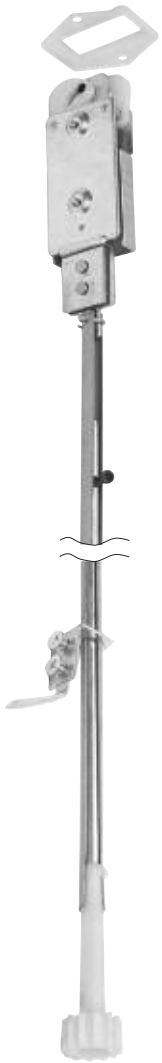

Our DL2240 Series Header Bolt is designed to add a top-door locking point in the inactive door. This bolt is activated when the DL2110B or MS18533 Latch is locked. As the throw bolt locks into the inactive door, it lifts the adjustable nylon rod end causing the Header Bolt to lift and expand its pawls in the head, which centers the bolt into the header. One per package.

PART NO.	CYLINDER CENTERLINE TO TOP OF DOOR
DL2240A	30-1/2" to 50" (775 to 1270)
DL2240B	55-5/8" to 77-1/2" (1413 to 1969)
DL2240C	67" to 89" (1702 to 2261)

Minimum order: 1 each. All Header Bolts and Latches can be combined for quantity pricing.

ADAMS RITE HEADER BOLT KIT

- Expanding Top Bolt
- Inactive Door Lock

Adams Rite
ASSA ABLOY

This Header Bolt fits the following door to cylinder height combinations:

DOOR HEIGHT	CYLINDER HEIGHT
84" or LESS (2134)	32" to 53" (813 to 1346)
85" to 90" (2159 to 2286)	38" to 59" (965 to 1499)
91" to 96" (2311 to 2438)	44" to 64" (1118 to 1626)

The Adams Rite 4085 Header Bolt is designed to add a top-of-door locking point for the inactive leaf of a pair of doors when used with the DL2110B or MS18533 Long Throw Deadlock. This Bolt, when triggered by the pivoted MS Bolt, expands in a "scissors" action to center itself in its strike as it rises. One per package.

PART NO.	CYLINDER HEIGHT
AR4085	32" to 64" (813 to 1626)

Minimum order: 1 each. All Header Bolts and Latches can be combined for quantity pricing.

ADAMS RITE HEADER BOLT KIT

- For Use With 1-1/8" (28.6) Backset Deadbolts

Adams Rite
ASSA ABLOY

The AR4016 Series Header Bolt Kit is designed to add a top-of-door locking point for pairs of doors in the active leaf. Use with MS18533 Deadlocks. Designed for use on 84" (2134) tall doors which have the cylinder location no lower than 35" (889) from the floor. One per package. **NOTE:** Adams Rite Header Bolt Kit will not work with our DL Series Locks.

PART NO.	CYLINDER HEIGHT
AR4016	35" (889) min. from floor

Minimum order: 1 each. All Header Bolts and Latches can be combined for quantity pricing.

Adams Rite is a registered trademark of Adams Rite Manufacturing Co., an ASSA ABLOY Group Company.

ENTRANCES

Accessories

Flush and Threshold Bolt Kits

FLUSH BOLTS

- **Radiused Face With 1/8", 3/16", or 1/4" (3.2, 4.8, or 6.4) Offsets**
- **Rod Length for 12" (305) Face Centerline Installation**
- **7/8" (22.2) Backset**
- **5/8" (15.9) Throw**

These Flush Bolts are designed to work on any radius faced narrow stile aluminum door. Intended to securely lock an inactive door. Three different offsets are available in aluminum or bronze finishes. A Nylon Flush Bolt Guide is included. One per package.

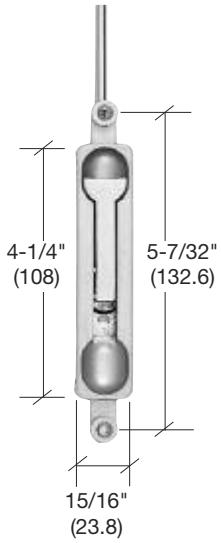

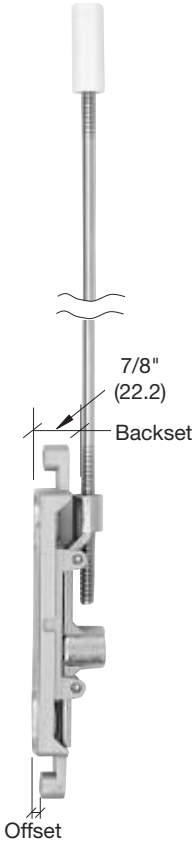

PART NO.	OFFSET	FINISH
DL2210A18	1/8" (3.2)	Aluminum
DL2210DU18	1/8" (3.2)	Bronze
DL2210A316	3/16" (4.8)	Aluminum
DL2210DU316	3/16" (4.8)	Bronze
DL2210A14	1/4" (6.4)	Aluminum
DL2210DU14	1/4" (6.4)	Bronze

Minimum order: 1 each. All Flush Bolts can be combined for quantity pricing.

ADAMS RITE THRESHOLD BOLT KIT

- **Provides Two-Point Security**

The AR4015 Series Threshold Bolt Kit is designed to add a bottom-of-door locking point for pairs of doors in the active leaf. Use with either the DL2110, DL2130 or MS18533 Series Deadlocks. Designed for use on doors with a maximum cylinder height of 53-7/16" (1357) from the floor. The threshold bolt can be cut for shorter applications.

PART NO.	CYLINDER HEIGHT
AR4015	Up to 53-7/16" (1357)

Minimum order: 1 each. All Bolt Kits can be combined for quantity pricing.

THRESHOLD BOLT KITS

- **11/16" (17.4) Bolt Throw**

Adding this Threshold Bolt Kit to a DL2210, DL2130, or MS18533 Series Deadlock allows maximum security for pairs of doors by dropping a hardened steel hex bolt into the threshold while simultaneously pivoting the Deadlock Throw Bolt into the mating door's stile. Available in two sizes.

PART NO.	CYLINDER HEIGHT
DL2230	34" to 37" (863 to 940)
DL2231	Up to 53-7/16" (1357)

Minimum order: 1 each. All Bolt Kits can be combined for quantity pricing.

FLUSH BOLT NYLON GUIDES

- **Works With DL2210 Series Flush Bolts**

Standard Flush Bolt Nylon Guide. One per package. Minimum order is one each.

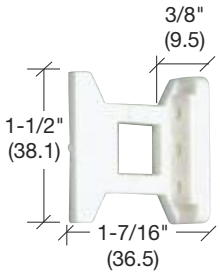

PART NO. DL2210SG

Extended Hole Flush Bolt Nylon Guide. One per package. Minimum order is one each.

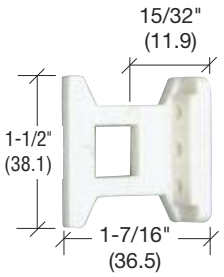

PART NO. DL2210EG

ENTRANCES

Accessories

Panic Exit Devices

- **Designed for Use With 1-3/4" (44) Narrow, Medium, and Wide Stile Aluminum, Wood, or Hollow Metal Doors**
- **Concealed Fastening for Added Security**

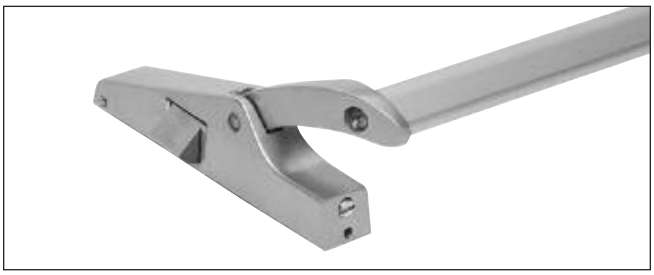

Model 1095

Model 2095

JACKSON 10 SERIES PANIC EXIT DEVICES

Features:

- Contoured Field Sizeable 48" (1219) Long Crossbar
- Standard Door Height 84" (2134) – Extension Available
- Dual Dogging Feature – By Outside Cylinder
  – By Dogging Pins on Panic Housing
- Wear Points Insulated by Nylon Sleeves and Rollers

PART NO.	TYPE	HANDING	FINISH
311095LC4628	Rim - 'C' Strike	Left Hand-Reverse Bevel	Satin Aluminum
311095RC4628	Rim - 'C' Strike	Right Hand-Reverse Bevel	Satin Aluminum
311095LC4313	Rim - 'C' Strike	Left Hand-Reverse Bevel	Dark Bronze
311095RC4313	Rim - 'C' Strike	Right Hand-Reverse Bevel	Dark Bronze
31108547628	Concealed Vertical Rod	Non-Handed	Satin Aluminum
31108547313	Concealed Vertical Rod	Non-Handed	Dark Bronze

Minimum order: 1 each.

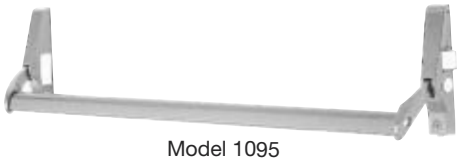

Model 1095

Model 1085

JACKSON 20 SERIES PANIC EXIT DEVICES

Features:

- Standard 36" (914) Wide Door - Field Sizeable up to 48" (1219) Width Available on Special Order
- Standard Door Height 84" (2134) – Extension Available
- Concealed Easy to Use Dogging System – Optional Cylinder Dogging Available on Special Order
- Wear Points Insulated by Nylon Sleeves and Rollers

PART NO.	TYPE	HANDING	FINISH
312095LC3628	Rim - 'C' Strike	Left Hand-Reverse Bevel	Satin Aluminum
312095RC3628	Rim - 'C' Strike	Right Hand-Reverse Bevel	Satin Aluminum
312095LC3313	Rim - 'C' Strike	Left Hand-Reverse Bevel	Dark Bronze
312095RC3313	Rim - 'C' Strike	Right Hand-Reverse Bevel	Dark Bronze
312085L37628	Concealed Vertical Rod	Left Hand-Reverse Bevel	Satin Aluminum
312085R37628	Concealed Vertical Rod	Right Hand-Reverse Bevel	Satin Aluminum
312085L37313	Concealed Vertical Rod	Left Hand-Reverse Bevel	Dark Bronze
312085R37313	Concealed Vertical Rod	Right Hand-Reverse Bevel	Dark Bronze

Minimum order: 1 each.

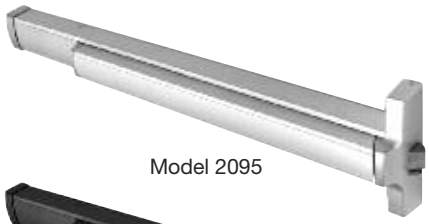

Model 2095

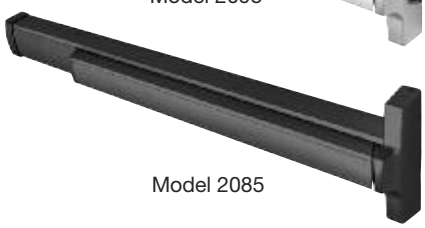

Model 2085

ENTRANCES

Accessories

Panic Exit Devices

JACKSON 1200 SERIES PANIC EXIT DEVICES

- **Designed for Use With 1-3/4" (44) Narrow, Medium, and Wide Stile Aluminum, Wood or Hollow Metal Doors**
- **"Soft-Touch" Smooth Action Push-Pad**
- **Field Sizeable**

PART NO.	TYPE	HANDING	FINISH
31127537628	36" Surface Vertical Rod	Non-Handed	Satin Aluminum
31127537313	36" Surface Vertical Rod	Non-Handed	Dark Bronze
311285L37628	36" Concealed Vertical Rod	Left Hand-Reverse Bevel	Satin Aluminum
311285R37628	36" Concealed Vertical Rod	Right Hand-Reverse Bevel	Satin Aluminum
311285L37313	36" Concealed Vertical Rod	Left Hand-Reverse Bevel	Dark Bronze
311285R37313	36" Concealed Vertical Rod	Right Hand-Reverse Bevel	Dark Bronze
311295C3628	Rim – 36" Base-'C' Strike	Non-Handed	Satin Aluminum
311295C4628	Rim – 48" Base-'C' Strike	Non-Handed	Satin Aluminum
311295C3313	Rim – 36" Base-'C' Strike	Non-Handed	Dark Bronze
311295C4313	Rim – 48" Base-'C' Strike	Non-Handed	Dark Bronze

Minimum order: 1 each.

Specifications:

1275 Surface Vertical Rod Device
- Stocked in Both 36" (914) and 48" (1219) Widths
- Standard Door Height 84" (2134 mm) – Field Sizeable

1285 Concealed Vertical Rod Device
- Stocked in Both 36" (914) and 48" (1219) Widths
- Standard Height 84" (2134) - Extension Available
- Requires Cylinder Mounting Pad When Using Mortise Cylinder for Keyed Outside Entry

1295 Rim Device
- Stocked in Both 36" (914) and 48" (1219) Widths
- Surface Mounted Roller Strike Standard
- Requires Rim Cylinder for Keyed Entry

Materials:
Base and Push-Pad: Extruded Aluminum
Mechanical Components: Stainless and Hardened, Plated Steel
Latch and Strikes: Sintered Steel

JACKSON 10 SERIES PUSH-PAD RETROFIT DEVICE

- **Sleek, Contemporary Style Push-Pad to Retrofit Existing Jackson 1085 Concealed Vertical Rod Crossbar Exit Device**
- **Uses Existing 10 Series Rod and Case Assembly**
- **Easy Installation – Cut to Fit**

PART NO.	HANDING	FINISH
311285RL3628	36" Left Hand-Reverse Bevel	Satin Aluminum
311285RR3628	36" Right Hand-Reverse Bevel	Satin Aluminum
311285RL3313	36" Left Hand-Reverse Bevel	Dark Bronze
311285RR3313	36" Right Hand-Reverse Bevel	Dark Bronze

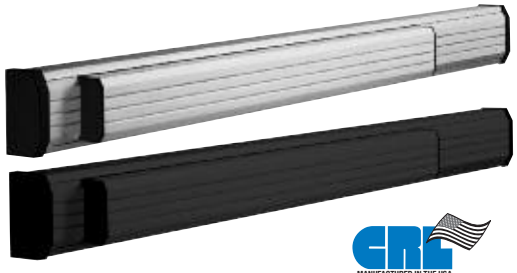

Specifications:
- Stocked in Both 36" (914) and 48" (1219) Widths

Materials:
Base and Push-Pad: Extruded Aluminum
Mechanical Components: Stainless and Hardened, Plated Steel

Accessories

Panic Exit Devices

JACKSON LOCKING FLAT LEVER OUTSIDE TRIM

- **Designed for Use With Jackson 1200 and 20 Series Panic Exit Devices**
- **Fits Narrow, Medium, and Wide Stile Aluminum, Wood or Hollow Metal Doors**
- **Non-Handed, Field Reversible**

The Jackson Locking Flat Lever Outside Trim has a narrow 1-3/4" (44) escutcheon that allows it to be used on narrow stile doors. The flat style lever is key-controlled, and requires the use of our Part No. DRA10 Series Keyed Mortise Cylinder, which locks or unlocks the lever (ANSI Function – 08)

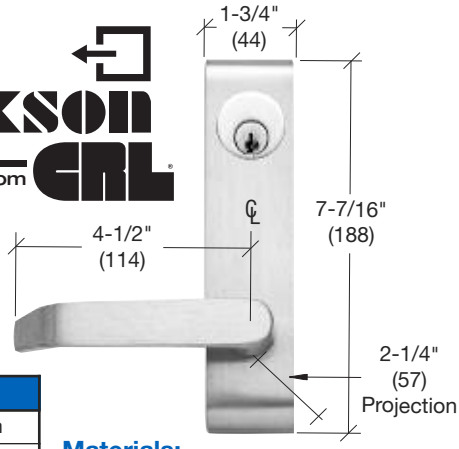

PART NO.	FOR USE WITH	FINISH
7500LV02628	Model 1275 Surface Vertical Rod Panic Device	Satin Aluminum
7500LV02313	Model 1275 Surface Vertical Rod Panic Device	Dark Bronze
8500LV02628	Model 1275 and 2085 Concealed Vertical Rod Panic Devices	Satin Aluminum
8500LV02313	Model 1275 and 2085 Concealed Vertical Rod Panic Devices	Dark Bronze
9500LV02628	Model 1295 and 2095 Rim Panic Devices	Satin Aluminum
9500LV02313	Model 1295 and 2095 Rim Panic Devices	Dark Bronze

Minimum order: 1 each. All Lever Lock Trim can be combined for quantity pricing.

Materials:
Escutcheon: High Tensile Strength Aluminum
Lever: High Tensile Strength Aluminum
Mechanical Components: Hardened, Plated Steel

JACKSON 896 REMOVABLE MULLIONS

- **For Use With Jackson 1095, 1295, and 2095 Rim Panic Exit Devices**
- **Increased Security for Paired Doors**

This extra heavy wall, cross-reinforced, extruded aluminum Jackson Removable Mullion is designed to provide increased security when used with paired doors equipped with latch bolt type Rim Panic Exit Devices.

The 896 Mullion is supplied with a pair of installed strikes and stabilizers to prohibit deflection of the doors. Secure floor and header mounting brackets provide stability and easy removal of the Mullions for increased opening access. Standard height is 96" (2.44 m), and it can be field cut to fit. Optional 120" (3.05 m) height is also available on special order.

PART NO.	FOR USE WITH	FINISH
3089610958628	Model 1095 Rim Panic Device	Satin Aluminum
3089610958313	Model 1095 Rim Panic Device	Dark Bronze
3089612958628	Model 1295 Rim Panic Device	Satin Aluminum
3089612958313	Model 1295 Rim Panic Device	Dark Bronze
3089620958628	Model 2095 Rim Panic Device	Satin Aluminum
3089620958313	Model 2095 Rim Panic Device	Dark Bronze

Minimum order: 1 each. All Mullions can be combined for quantity pricing.

Materials:
Body: Extruded Aluminum
Stabilizer: Aluminum
Strike: Sintered Steel
Mounting Brackets: Bronze

JACKSON 12" AND 24" TOP ROD EXTENDERS

- **For Use With Jackson 1085, 1285, and 2085 Concealed Vertical Rod Exit Devices**

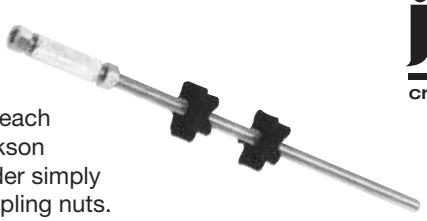

These Jackson Top Rod Extenders are available in 12" (305) and 24" (610) lengths, and are intended to extend the reach of the top rod for doors over 84" (2134) when used with Jackson Concealed Vertical Rod Panic Exit Devices. The Rod Extender simply attaches to the standard main rod by using the supplied coupling nuts. Foam rubber silencers are provided to quiet rod operation.

PART NO.	LENGTH
301347	12" (305)
301348	24" (610)

Minimum order: 1 each.

ENTRANCES

Accessories

Panic Exit Devices

VON DUPRIN® 33A/35A SERIES EXIT DEVICE PRODUCTS

- **Fits Door Stiles as Narrow as 1-3/4" (44)**
- **Available With Smooth or Grooved Housing**
- **Non-Handed**
- **UL Listed and Tested to ANSI A156.3, Grade 1**

VON DUPRIN®

Von Duprin® designs and manufactures Exit Devices to the highest standards of quality and reliability in accordance with U.S. domestic and international standards. All 33A and 35A Series Exit Devices are UL Listed for Panic Exit Hardware, and are tested in accordance to ANSI A156.3, Grade 1 standards. For additional information, contact U.S. Aluminum Technical Sales at (800) 262-5151. You can also visit our web site at **usalum.com**.

33A Series features a grooved mechanism case

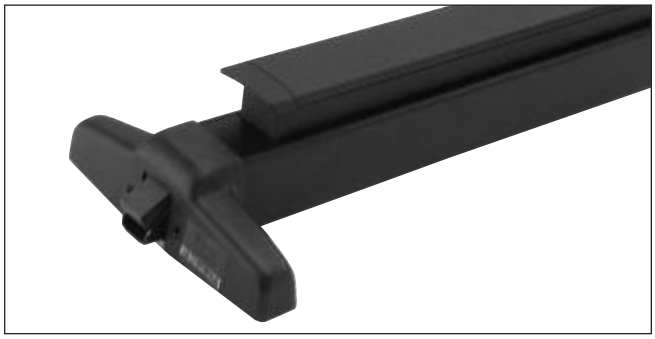

35A Series features a smooth mechanism case

RIM DEVICES

33A GROOVED PART NO.	35A SMOOTH PART NO.	DEVICE LENGTH	FINISH
33AE03626	35AE03626	36" (914)	Satin Chrome
33AE03313	35AE03313	36" (914)	Dark Bronze
33AE04626	35AE04626	48" (1219)	Satin Chrome
33AE04313	35AE04313	48" (1219)	Dark Bronze

Minimum order: 1 each.

SURFACE MOUNTED VERTICAL ROD DEVICES

33A GROOVED PART NO.	35A SMOOTH PART NO.	DEVICE LENGTH	FINISH
3327AE03626	3527AE03626	36" (914)	Satin Chrome
3327AE03313	3527AE03313	36" (914)	Dark Bronze
3327AE04626	3527AE04626	48" (1219)	Satin Chrome
3327AE04313	3527AE04313	48" (1219)	Dark Bronze

Minimum order: 1 each.

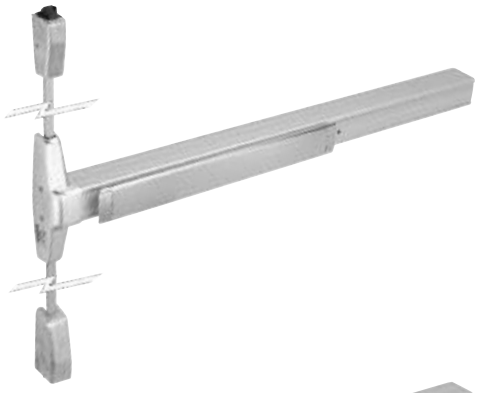

CONCEALED VERTICAL ROD DEVICES

33A GROOVED PART NO.	35A SMOOTH PART NO.	DEVICE LENGTH	FINISH
3347AE03626	3547AE03626	36" (914)	Satin Chrome
3347AE03313	3547AE03313	36" (914)	Dark Bronze
3347AE04626	3547AE04626	48" (1219)	Satin Chrome
3347AE04313	3547AE04313	48" (1219)	Dark Bronze

Minimum order: 1 each.

Von Duprin is a registered trademark of Ingersoll-Rand plc, its subsidiaries and/or affiliates in the United States and other countries.

Accessories

Panic Exit Devices

ADAMS RITE 8400/8600/8800 SERIES EXIT DEVICE PRODUCTS

- **Fits Door Stiles as Narrow as 2" (51)**
- **UL Listed and Tested to ANSI A156.3, Grade 1**
- **Easy to Install**

Adams Rite
ASSA ABLOY

8400 MORTISE DEVICES

LEFT HAND PART NO.	RIGHT HAND PART NO.	DEVICE LENGTH	FINISH
DH84111L036	DH84111R036	36" (914)	Clear Anodized
DH84122L036	DH84122R036	36" (914)	Dark Bronze Anodized
DH84111L042	DH84111R042	42" (1067)	Clear Anodized
DH84122L042	DH84122R042	42" (1067)	Dark Bronze Anodized
DH84111L048	DH84111R048	48" (1219)	Clear Anodized
DH84122L048	DH84122R048	48" (1219)	Dark Bronze Anodized

Minimum order: 1 each. Includes: Panic Device and Strike. Cylinder not included.

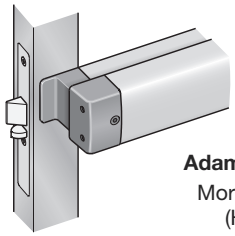

Adams Rite 8400
Mortise Device
(Handed)

8600 CONCEALED VERTICAL ROD DEVICES

PART NO.	DEVICE LENGTH	FINISH
DH8601136	36" (914)	Clear Anodized
DH8602236	36" (914)	Dark Bronze Anodized
DH8601142	42" (1067)	Clear Anodized
DH8602242	42" (1067)	Dark Bronze Anodized
DH8601148	48" (1219)	Clear Anodized
DH8602248	48" (1219)	Dark Bronze Anodized

Minimum order: 1 each. Includes: Panic Device, Rods, and Strike. Mortise Cylinder and Cylinder Pad not included.

Adams Rite 8600
Concealed Vertical
Rod Device
(Non-Handed)

8800 RIM DEVICES

PART NO.	DEVICE LENGTH	FINISH
DH8801136	36" (914)	Clear Anodized
DH8802236	36" (914)	Dark Bronze Anodized
DH8801142	42" (1067)	Clear Anodized
DH8802242	42" (1067)	Dark Bronze Anodized
DH8801148	48" (1219)	Clear Anodized
DH8802248	48" (1219)	Dark Bronze Anodized

Minimum order: 1 each. Includes: Panic Device and Strike Rim Cylinder. Not Included: Pairs of Doors require removable mullion (DH886).

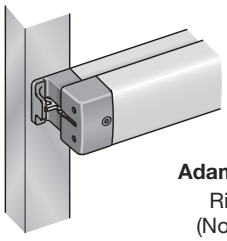

Adams Rite 8800
Rim Device
(Non-Handed)

REMOVABLE MULLION

PART NO.	LENGTH	FINISH
DH8861196	96" (2438)	Clear Anodized
DH8862296	96" (2438)	Dark Bronze Anodized
DH88611120	120" (3048)	Clear Anodized
DH88622120	120" (3048)	Dark Bronze Anodized

Minimum order: 1 each.

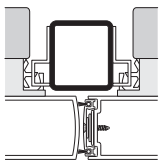

Removable Mullion

Includes: Mullion, strikes, stabilizers, and mounting clips.

Adams Rite is a registered trademark of Adams Rite Manufacturing Co., an ASSA ABLOY Group Company.

MID PANELS

- **Designed to be Glazed in Our Aluminum Framed Doors**
- **Decorative Logos on Exterior for a Completely Custom Look**
- **Available in Clear and Champagne Finishes**
- **Fits Up to 48" (1219) Door Widths**

Mid Panels are available in a variety of designs, sizes, and finishes to suit the requirements of aluminum framed doors. Consult with U.S. Aluminum Technical Sales at (800) 262-5151 Ext. 5305 for more information.

McDonald's
For 36" and 42" Door Widths

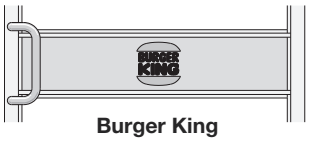

Burger King
For 36" and 42" Door Widths

Wendy's
For 36" Door Width

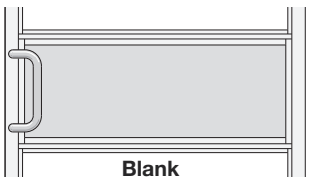

Blank
Up to 48" Door Width Specify Size

ENTRANCES

Entrance Door Options

Mid-Panel Panic Exit Devices

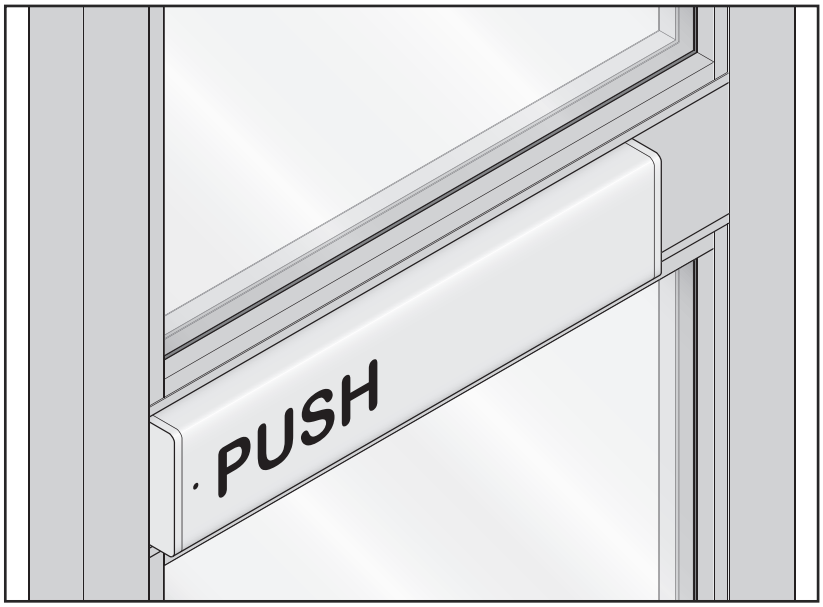

This entrance option is available on the following U.S. Aluminum products:

MID-PANEL PANIC COMPATIBLE PRODUCTS
Series 250 Narrow Stile Doors
Series 400 Medium Stile Doors
Series 550 Wide Stile Doors
Series 800 Durafront Entrance Systems
Series 850 Durafront Entrance Systems

NOTE: CRL Jackson Brand Panics are the standard. However, if you require Von Duprin® or other brand panics we can supply as requested.

Combining contemporary styling with maximum security features, the Mid-Panel Panic option provides a Concealed Vertical Rod Panic Device with a Touch Bar Actuator. Matching mid-panels without hardware are available for sidelites.

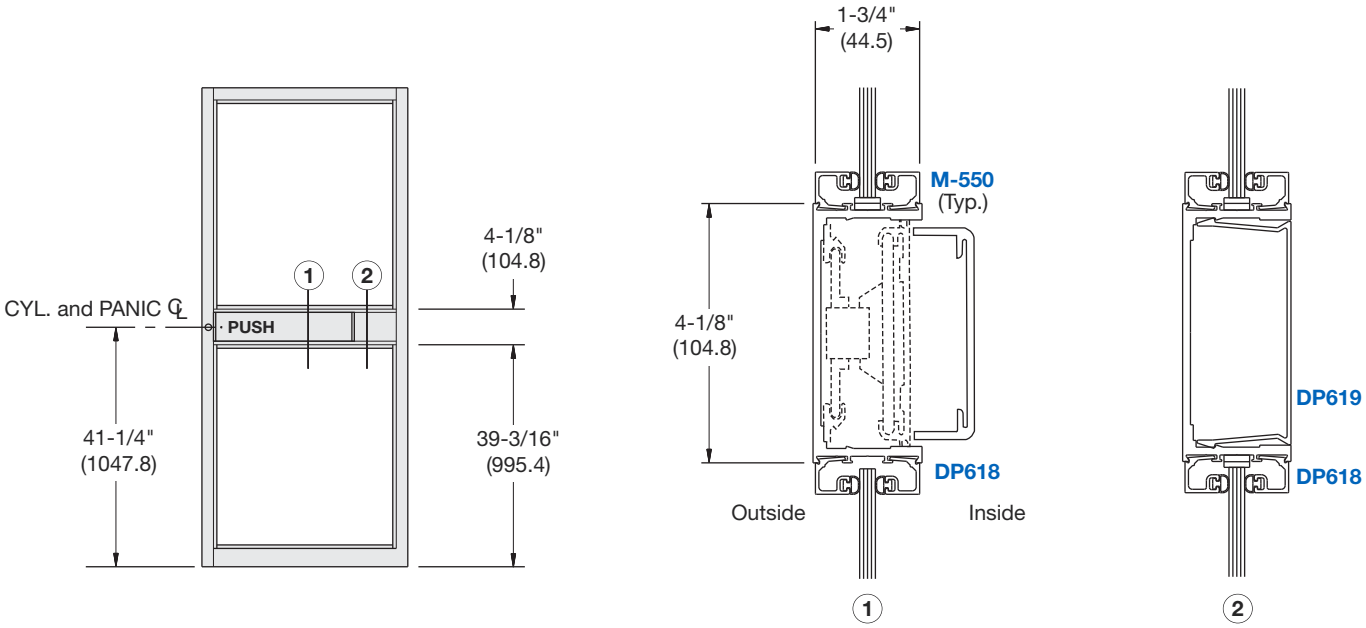

NOT TO SCALE

Von Duprin is a registered trademark of Ingersoll-Rand plc, its subsidiaries and/or affiliates in the United States and other countries.

CRL U.S. ALUMINUM

ENTRANCES

Accessories

Access Control Handles

Blumcraft
CRL A DIVISION OF C.R. LAURENCE CO., INC. OF PITTSBURGH

- **Access Control Handles With a Large Selection of Exterior Fixed Pulls for Medium and Wide Stile Doors**
- **Available in Polished and Brushed Stainless, Satin and Polished Brass, and Oil Rubbed Bronze**
- **Custom Finishes Available By Special Order**

CRL-Blumcraft manufacturers a complete line of Access Control Handles for all your door needs. We have Panic Devices, Deadbolt Handles, and Electronic Egress Control Handles in a wide variety of configurations. We can also supply you with Dummy Handles to match these devices, allowing you to maintain the same appearance throughout the project, but without the added costs. Please review the following pages for the complete selection, or visit **crl-arch.com** for more information.

NEW! Designer Series

- **Unique, Modern Look**
- **Sharp Lines and Angles With a Smooth Round Gripping Surface**
- **Crisp Transitions at All Corners**
- **Available in Alloy 316 Brushed or Polished Stainless Steel**

MANUFACTURED IN THE USA BY C.R. LAURENCE
An ISO9001:2008 Certified Company

VISIT CRL-ARCH.COM FOR COMPLETE ARCHITECTURAL SPECIFICATIONS

USE MONOLITHIC TEMPERED GLASS

For additional information, contact U.S. Aluminum Technical Sales at (800) 262-5151 in the U.S. and Canada, or (323) 268-4230 International, and ask for Ext. 5305. You can also e-mail us through our web site at **usalum.com**.

ENTRANCES

Accessories

Access Control Handles

- **Available in Panic, Deadbolt, Electronic Egress, and Dummy Models**
- **Stock Sizes Available for Immediate Shipment**
- **Custom Sizes Ship Within One to Two Weeks**

CRL-BLUMCRAFT PANIC HANDLES

- **Elegant Tubular Design**
- **UL and ANSI/BHMA Certified**

The operating mechanism concealed within the vertical tubing of our Panic Handles retracts the latch bolt when the interior actuation bar is pushed. An optional exterior Keyed Access Device can be installed to allow entry. A special dogging feature allows the doors to remain unlocked during business hours. Electronic Strikes are also available, providing a variety of secured entry options.

CRL-BLUMCRAFT DEADBOLT HANDLES

- **Easy Secure Access**
- **ANSI/BHMA Certified**

The locking mechanism is concealed within the vertical tubing of our Deadbolt Handles, providing easy access through the use of a variety of keying options. An optional Top Latch Roller Bolt allows the use of Electronic Strikes for controlled entry systems.

CRL-BLUMCRAFT ELECTRONIC EGRESS CONTROL HANDLES

- **Ideal for Maintaining Security and Aesthetics**
- **UL Recognized Component**
- **U.S. Patent No. 7,347,461**

An electronic switch concealed within the vertical tubing of our Electronic Egress Control Handle releases the magnetic lock at the top or bottom of the door when the interior actuation bar is pushed. Please consult your local building codes as they relate to electromagnetic locking hardware acceptability.

CRL-BLUMCRAFT DUMMY HANDLES

- **An Endless Variety of Configurations are Available to Match Our Panic, Deadbolt, and Electronic Egress Handles**
- **Elegant Tubular Design**

When functionality is not required, our Dummy Handles can be made to match any of our Panic, Deadbolt or Electronic Egress Handles, giving you the same appearance throughout your project.

Accessories

Access Control Handles

STANDARD INTERIOR CONFIGURATIONS FOR CRL-BLUMCRAFT PANIC HANDLES

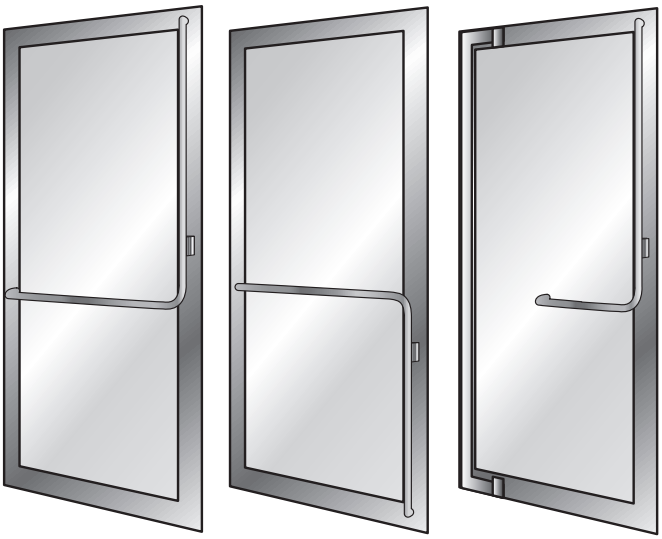

PA100 Series — Available with or without Keyed Access Device

PA110 Series — Available with or without Keyed Access Device

BDA100 Series — For Balanced Door Panic Handles see opposite page

NOTE: All Exterior Fixed Handles below can be used in combination with any Panic Handle.

Contact U.S. Aluminum Technical Sales at (800) 262-5151 in the U.S. and Canada, or International at (323) 268-4230, and ask for Ext. 5305. You can also send e-mail from the **usalum.com** home page.

EXTERIOR HANDLE COMBINATIONS FOR DOORS WITH CRL-BLUMCRAFT PANIC HANDLES

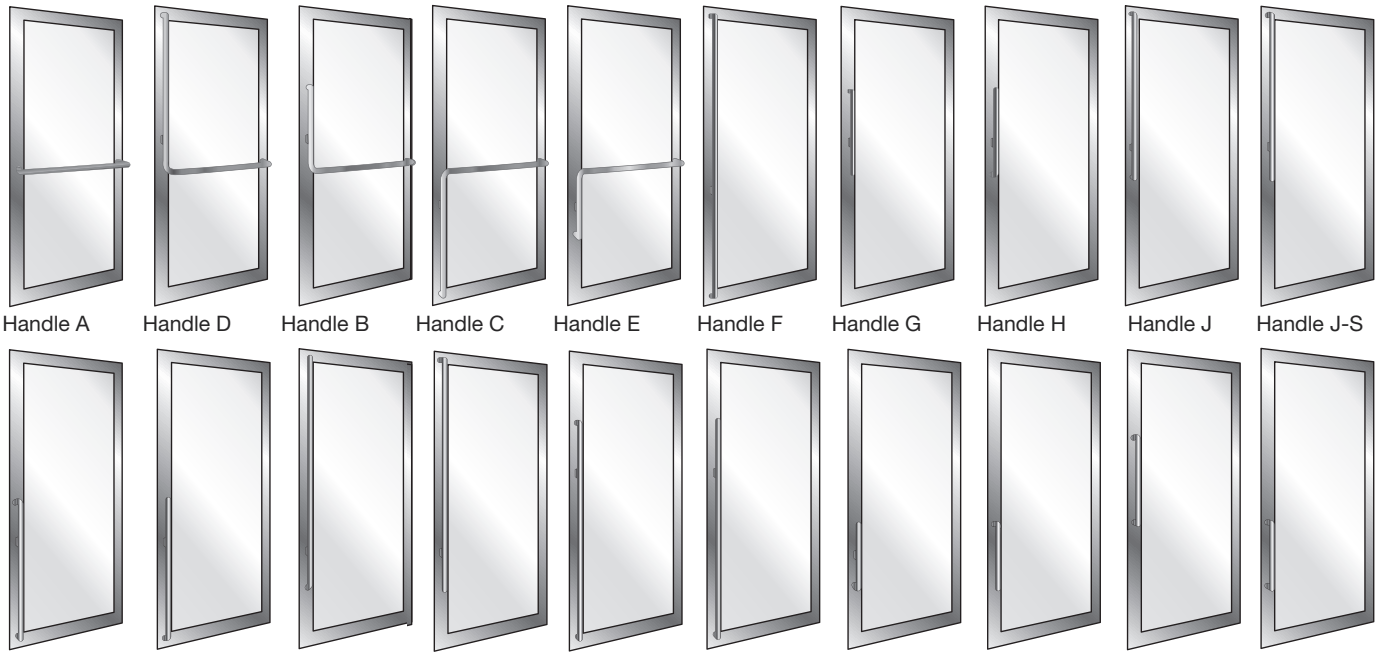

NOTE: All Access Control Handles on this page function as health and safety tools, and may only be purchased through CRL Authorized Glass Temperers and Door Manufacturers.

Online usalum.com By Phone (800) 262-5151 Ext. 5305

Online crlaurence.com By Phone (800) 421-6144 Ext. 5305

ENTRANCES

Accessories

Panic Handles for Balanced Doors
• Series BDA100

- **Specifically Designed for Balanced Doors**
- **UL, ULC, and ANSI/BHMA Certified**
- **For 1/2" or 3/4" (12 or 19) Tempered Glass**
- **Available in Polished and Brushed Stainless, Satin and Polished Brass, and Oil Rubbed Bronze**
- **Custom Finishes Available By Special Order**
- **Custom Sizes Ship Within One to Two Weeks**

Our Balanced Door Panic Handles were created to meet the building code requirements for Balanced Doors, while maintaining an excellent appearance. The building code states that the push pad shall not extend more than one-half the width of the door measured from the latch side, and this creates an undesirable appearance.

Our BDA100 Series has a fixed handle portion that extends toward the hinge side of the door, with a clearly defined push pad handle portion at the latch side of the door. This wider handle has greatly improved aesthetics over a handle that only spans one-half of the door's width.

Yet another fine example of our commitment to meeting building code requirements, while at the same time delivering the beautiful hardware that our architectural customers demand.

EXTERIOR HANDLE COMBINATIONS FOR BALANCED DOORS WITH CRL PANIC HANDLES

NOTE: Exterior Fixed Handles shown below can be used in combination with our BDA100 Series Panic Handle. For additional Exterior Fixed Handle options, see page 31-H9.

Handle A-BD

Handle D-BD

Handle B-BD

Contact U.S. Aluminum Technical Sales at (800) 262-5151 in the U.S. and Canada, or International at (323) 268-4230, and ask for Ext. 5305. You can also send e-mail from the **usalum.com** home page. **NOTE:** All Access Control Handles on this page function as health and safety tools, and may only be purchased through CRL Authorized Glass Temperers and Door Manufacturers.

Online usalum.com By Phone (800) 262-5151 Ext. 5305
Online crlaurence.com By Phone (800) 421-6144 Ext. 5305

Accessories

Overhead Stops and Holders are used to protect both doors and entire entryways from damage caused by violent door openings due to wind gusts, heavy traffic frequency, abuse, and vandalism. By limiting the door travel, they can prevent damage to the door frame, closer, hinges, and pivots.

Overhead Door Stops and Holders

Rixson® is a registered trademark of Yale Security, Inc., an ASSA ABLOY Group Company.

HEAVY-DUTY 6 SERIES CONCEALED MOUNT OVERHEAD STOP

- **Concealed Slide Track in Top Door Rail**
- **Protects Door and Entryway**
- **For Exterior or Interior Doors**
- **Non-Handed**
- **ANSI 156.8 Grade 1**

FEATURES AND SPECIFICATIONS

- Low Profile Concealed Channel Slide Track
- Designed for Installation in Aluminum Door Webbing and Door Rails
- Non-Handed
- Heavy Shock Absorber Spring Provides 5 to 7 Degree Compression Before Reaching a Dead-Stop
- Non-Metal Slide Block
- 110 Degree Maximum Opening
- Furnished With Fasteners for Both Wood or Metal Door and Frame

DOOR OPENING TYPE			
PART NO.	OFFSET PIVOTS/HINGES	CENTER-HUNG PIVOTS	FINISH
6236SS 6236PB 6236DU	28-1/16" to 33" (713 to 838)	30" to 36" (762 to 914)	Satin Stainless Polished Brass Painted Dark Bronze
6336SS 6336PB 6336DU	33-1/16" to 38" (840 to 965)	36-1/16" to 41" (916 to 1041)	Satin Stainless Polished Brass Painted Dark Bronze
6436SS 6436PB 6436DU	38-1/16" to 43" (967 to 1092)	41-1/16" to 46" (1043 to 1168)	Satin Stainless Polished Brass Painted Dark Bronze
6536SS 6536PB 6536DU	43-1/16" to 48" (1094 to 1219)	46-1/16" to 50" (1170 to 1270)	Satin Stainless Polished Brass Painted Dark Bronze

Minimum order: 1 each. All Overhead Stops can be combined for quantity pricing.

MULTI-FUNCTION 10 SERIES SURFACE MOUNT OVERHEAD STOPS AND HOLDERS

Rixson® is a registered trademark of Yale Security, Inc., an ASSA ABLOY Group Company.

- **Surface Mounted for New or Retrofit Installations**
- **Protects Door and Entryway**
- **For Exterior or Interior Doors**
- **Non-Handed**
- **ANSI 156.8 Grade 1**

FEATURES AND SPECIFICATIONS

- Non-Handed – Slide Track Design
- Multi-Function Slider for Field Selection of Hold Open, Friction Stay or Stop Only
- Degree of Opening Fully Adjustable – 110 Degree Maximum Opening
- Heavy Shock Absorber Spring Provides 5 to 7 Degree Compression Before Reaching a Dead-Stop
- Non-Metal Slide and Shock Block
- Furnished With Fasteners for Both Wood or Metal Door and Frame
- Recommended for Medium Traffic, Medium Weight Doors

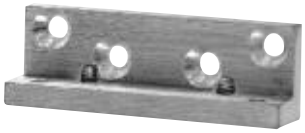

Optional Mounting Bracket

PART NO. 5258

DOOR OPENING TYPE			
PART NO.	OFFSET PIVOTS/HINGES	CENTER-HUNG PIVOTS	FINISH
10346SS 10346SA 10346DU	30-1/16" to 36" (764 to 914)	32-1/16" to 38" (814 to 965)	Satin Stainless Painted Aluminum Painted Dark Bronze
10446SS 10446SA 10446DU	36-1/16" to 42" (916 to 1067)	38-1/16" to 45" (967 to 1143)	Satin Stainless Painted Aluminum Painted Dark Bronze
10546SS 10546SA 10546DU	42-1/16" to 48" (1068 to 1219)	45-1/16" to 48" (1145 to 1219)	Satin Stainless Painted Aluminum Painted Dark Bronze

Minimum order: 1 each. All Overhead Stops can be combined for quantity pricing.

NOTE: Standard 10 Series Overhead Stops and Holders are shipped for Push Side Mounting. For Pull Side Mounting, Order Part No. 5258 Optional Mounting Bracket.

ENTRANCES

Accessories

Door Stops and Holders

HEADER MOUNTED SINGLE DOOR STOP

This Header Mounted Single Door Stop provides a positive stop when converting a double acting door into a single acting one-way door. Easy to install and available in four popular finishes (screws not included). One per package.

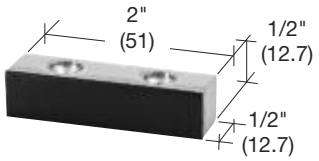

PART NO.	FINISH
1NT307A	Aluminum
1NT307BR	Polished Brass
1NT307BS	Brushed Stainless
1NT307PS	Polished Stainless

Minimum order: 1 each.

HEADER MOUNTED DOUBLE DOOR STOP

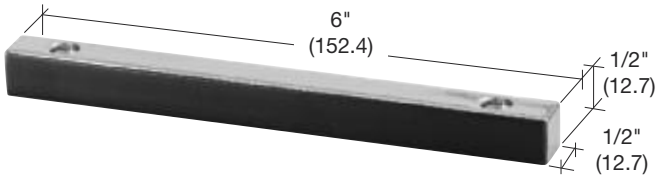

This Header Mounted Double Door Stop provides a positive stop when converting a double acting door into a single acting one-way door. Easy to install and available in four popular finishes (screws not included). One per package.

PART NO.	FINISH
1NT308A	Aluminum
1NT308BR	Polished Brass
1NT308BS	Brushed Stainless
1NT308PS	Polished Stainless

Minimum order: 1 each.

WALL MOUNTED HEAVY-DUTY DOOR STOP

This Wall Mounted Door Stop has a heavy brass die cast body with rubber bumper. Screws and anchors are included. One per package.

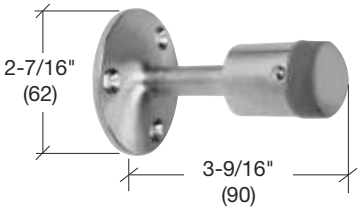

PART NO.	FINISH
DL2532A	Satin Chrome
DL2532PB	Polished Brass

Minimum order: 1 each.

WALL MOUNTED HEAVY-DUTY DOOR HOLDER

This Wall Mounted Door Holder has a hook latch to keep the door in the open position. The body is made from cast brass. Screws and anchors are included. One per package.

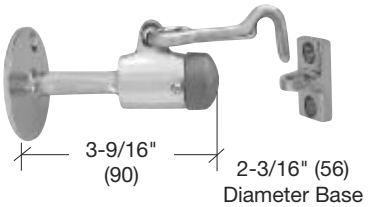

PART NO.	FINISH
DL2531A	Satin Chrome
DL2531PB	Polished Brass

Minimum order: 1 each.

FLOOR MOUNTED HEAVY-DUTY DOOR STOP

Heavy brass die cast body with rubber bumper. Floor Mounted Stop has a center floor post which seats into a bored hole in the floor, preventing shifting of the base. Screws and anchors are included. One per package.

PART NO.	FINISH
DL2522A	Satin Chrome
DL2522PB	Polished Brass

Minimum order: 1 each.

FLOOR MOUNTED HEAVY-DUTY DOOR HOLDER

The Floor Mounted Door Holder has a center floor post that seats into a bored hole in the floor, preventing shifting of the base. Screws and anchors are included. One per package.

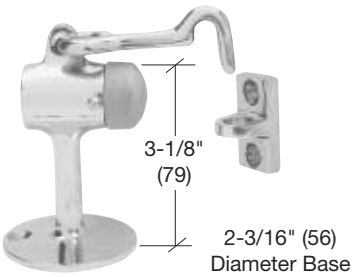

PART NO.	FINISH
DL2521A	Satin Chrome
DL2521PB	Polished Brass

Minimum order: 1 each.

LOW PROFILE BASE DOME DOOR STOP

Heavy cast 1-3/4" (44.4) diameter Door Stop with a vinyl insert. The low profile base has a post that seats into a hole bored into the floor, preventing base from shifting. One per package.

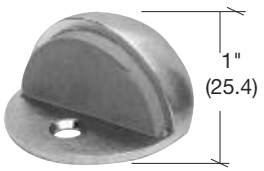

3/32" (2.4)
Low Profile Base

PART NO.	FINISH
DL2501A	Satin Chrome
DL2501DU	Dark Bronze
DL2501PB	Polished Brass

Minimum order: 1 each.

HIGH PROFILE BASE DOME DOOR STOP

Heavy cast 1-3/4" (44.4) diameter Door Stop with a vinyl insert. The high profile base has a post that seats into a hole bored into the floor, preventing base from shifting. One per package.

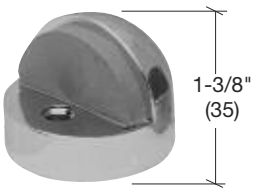

1/2" (12.7)
High Profile Base

PART NO.	FINISH
DL2502A	Satin Chrome
DL2502DU	Dark Bronze
DL2502PB	Polished Brass

Minimum order: 1 each.

Accessories

Door Holders, Bumpers, and A.D.A. Adaptor

DOOR MOUNTED 4" HEAVY-DUTY DOOR HOLDER

- **Cast Iron Construction**

This Heavy-Duty Door Holder is a 4" (101.6) kick-down style holder with rubber tip. It is intended to hold the door open at any degree of opening. One per package or bulk packs of 10.

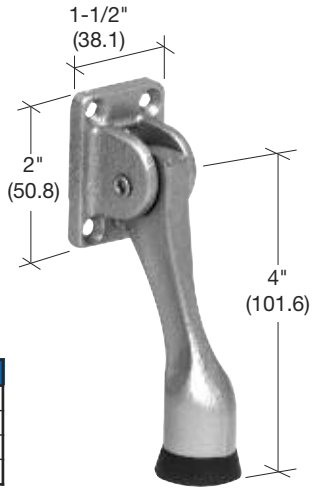

PART NO.	FINISH	QTY/PACK
J4551	Aluminum	1
J4551B	Aluminum	10
J4552	Bronze	1
J4552B	Bronze	10

Minimum order: 1 pack.

DOOR MOUNTED 4-1/2" HEAVY-DUTY DOOR HOLDER

- **Meets ANSI Standards**

This Heavy-Duty Door Stop is a 4-1/2" (114) kick-down style holder with rubber tip. Designed to hold door open at any degree of opening. One per package.

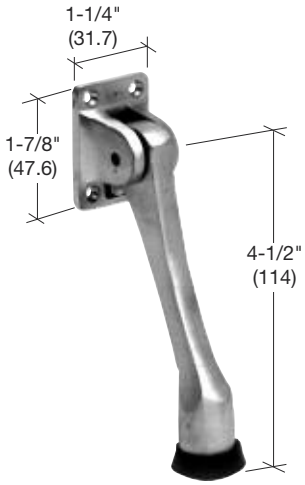

PART NO.	FINISH
J4571	Brushed Chrome
J4572	Polished Brass
J4671	Polished Chrome

Minimum order: 1 pack.

DOOR MOUNTED STEP-ON DOOR HOLDER

- **Step-On Application and Release**
- **Spring Loaded Plunger**

This Door Mounted Step-On Door Holder is a plunger type heavy-duty die cast stop. Easy on and off step-on application with heavy-duty rubber foot. One per package.

PART NO.	FINISH
J4594	Brass
J4595	Aluminum

Minimum order: 1 pack.

A.D.A. DOOR RAIL ADAPTOR

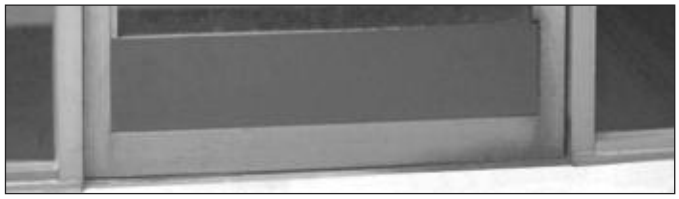

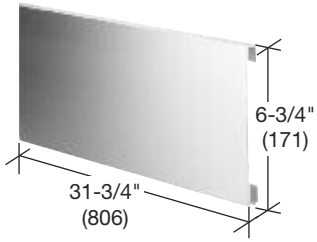

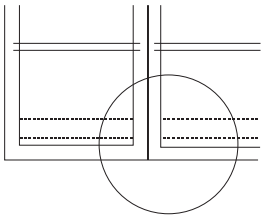

Allows existing doors to meet California Title 24 Handicap Code requirements of a 10" (254) bottom rail. Easily mounts between door stiles with double face tape. 6-3/4" (171) wide x 31-3/4" (806) long to fit 36" (914) doors. Other sizes available on request. One per package.

PART NO.	FINISH
10AD	Aluminum
10BRZ	Bronze

Minimum order: 1 each.

CONVEX TYPE WALL MOUNT DOOR BUMPER

Heavy cast housing with a vinyl insert. 2-1/2" (63.5) diameter base plate mounts to wall, and housing mounts over plate to conceal mounting screws. Projects 1" (25) from surface of wall. One per package.

PART NO.	FINISH
DL2511A	Satin Chrome
DL2511DU	Dark Bronze
DL2511PB	Polished Brass

Minimum order: 1 each.

CONCAVE TYPE WALL MOUNT DOOR BUMPER

Heavy cast housing with a vinyl insert. 2-1/2" (63.5) diameter base plate mounts to wall, and housing mounts over plate to conceal mounting screws. Projects 1" (25) from surface of wall. One per package.

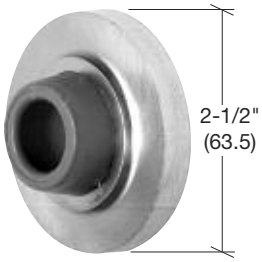

PART NO.	FINISH
DL2512A	Satin Chrome
DL2512DU	Dark Bronze
DL2512PB	Polished Brass

Minimum order: 1 each.

ENTRANCES

Accessories

Aluminum Thresholds

- Aluminum and Bronze Finishes in Three Lengths
- A Variety of Available Widths and Heights
- Furnished With Screws for Installation

MODEL TH014A AND TH014D
4" COMMERCIAL SADDLE THRESHOLD

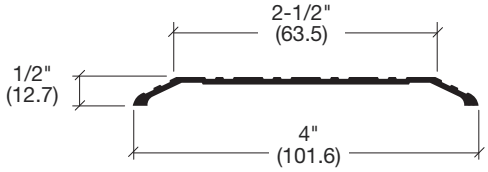

• COMMONLY USED WITH 4" WIDE STOREFRONT TUBING

ALUMINUM PART NO.	BRONZE PART NO.	LENGTH
TH014A36	TH014D36	36-1/2" (927)
TH014A72	TH014D72	73" (1854)
TH014A185	TH014D185	185" (4.7 m)*

Minimum order: 1 each. All Thresholds can be combined for quantity pricing.
*Must ship common carrier.

MODEL 38A AND 38D
4" COMMERCIAL SADDLE THRESHOLD

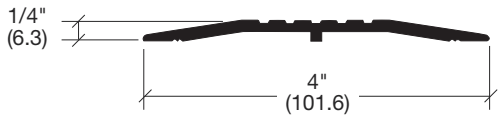

• COMMONLY USED WITH 4" WIDE STOREFRONT TUBING

ALUMINUM PART NO.	BRONZE PART NO.	LENGTH
38A36	38D36	36-1/2" (927)
38A72	38D72	73" (1854)
38A185	38D185	185" (4.7 m)*

Minimum order: 1 each. All Thresholds can be combined for quantity pricing.
*Must ship common carrier.

MODEL TH250A AND TH250D
4-3/4" COMMERCIAL SADDLE THRESHOLD

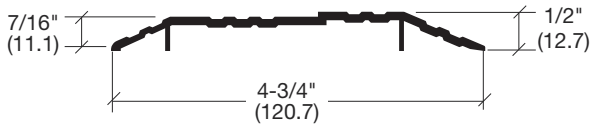

• COMMONLY USED WITH OFFSET HUNG DOORS

ALUMINUM PART NO.	BRONZE PART NO.	LENGTH
TH250A36	TH250D36	36" (914)
TH250A42	TH250D42	42" (1067)
TH250A72	TH250D72	72" (1829)

Minimum order: 1 each. All Thresholds can be combined for quantity pricing.

MODEL TH015A AND TH015D
5" COMMERCIAL SADDLE THRESHOLD

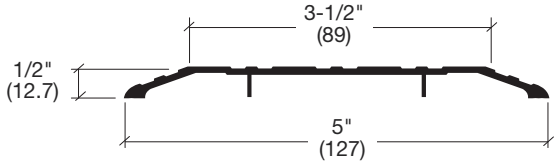

• GENERALLY USED WITH 4-1/2" WIDE STOREFROST TUBING

ALUMINUM PART NO.	BRONZE PART NO.	LENGTH
TH015A36	TH015D36	36-1/2" (927)
TH015A72	TH015D72	73" (1854)
TH015A185	TH015D185	185" (4.7 m)*

Minimum order: 1 each. All Thresholds can be combined for quantity pricing.
*Must ship common carrier.

MODEL 48A AND 48D
5" COMMERCIAL SADDLE THRESHOLD

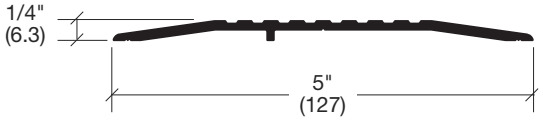

• 1/2" MAXIMUM HEIGHT MEETS A.D.A. REQUIREMENTS

ALUMINUM PART NO.	BRONZE PART NO.	LENGTH
48A36	48D36	36-1/2" (927)
48A72	48D72	73" (1854)
48A185	48D185	185" (4.7 m)*

Minimum order: 1 each. All Thresholds can be combined for quantity pricing.
*Must ship common carrier.

ENTRANCES

Accessories

Aluminum Thresholds

- Aluminum and Bronze Finishes in Three Lengths
- A Variety of Available Widths and Heights
- Furnished With Screws for Installation

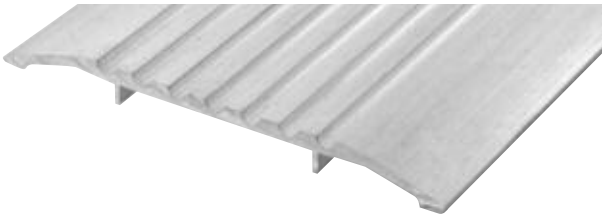

MODEL 42A AND 42D
6" COMMERCIAL SADDLE THRESHOLD

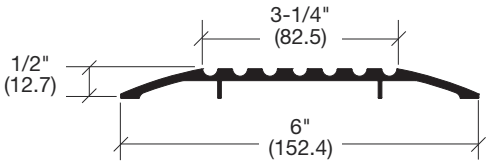

• AVAILABLE IN THREE LENGTHS AND TWO FINISHES

ALUMINUM PART NO.	BRONZE PART NO.	LENGTH
42A36	42D36	36-1/2" (927)
42A72	42D72	73" (1854)
42A185	42D185	185" (4.7 m)*

Minimum order: 1 each. All Thresholds can be combined for quantity pricing.
*Must ship common carrier.

MODEL 49A AND 49D
6" COMMERCIAL SADDLE THRESHOLD

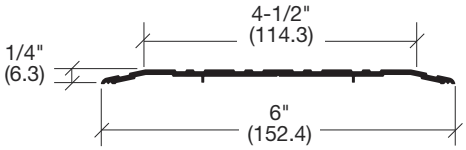

• AVAILABLE IN THREE LENGTHS AND TWO FINISHES

ALUMINUM PART NO.	BRONZE PART NO.	LENGTH
49A36	49D36	36-1/2" (927)
49A72	49D72	73" (1854)
49A185	49D185	185" (4.7 m)*

Minimum order: 1 each. All Thresholds can be combined for quantity pricing.
*Must ship common carrier.

MODEL TH017A AND TH017D
7" COMMERCIAL SADDLE THRESHOLD

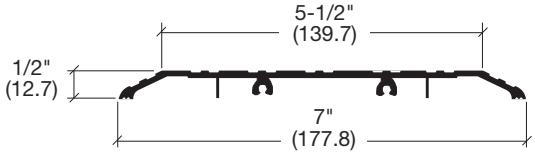

• TYPICALLY USED IN APPLICATIONS USING HEAVY-DUTY FLOOR CLOSERS

ALUMINUM PART NO.	BRONZE PART NO.	LENGTH
TH017A36	TH017D36	36-1/2" (927)
TH017A72	TH017D72	73" (1854)
TH017A185	TH017D185	185" (4.7 m)*

Minimum order: 1 each. All Thresholds can be combined for quantity pricing.
*Must ship common carrier.

MODEL 491A AND 491D
8" COMMERCIAL SADDLE THRESHOLD

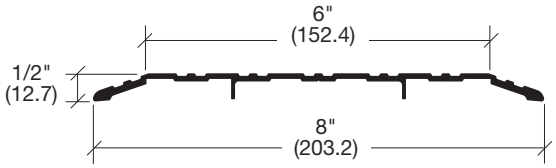

• AVAILABLE IN THREE LENGTHS AND TWO FINISHES

ALUMINUM PART NO.	BRONZE PART NO.	LENGTH
491A36	491D36	36-1/2" (927)
491A72	491D72	73" (1854)
491A185	491D185	185" (4.7 m)*

Minimum order: 1 each. All Thresholds can be combined for quantity pricing.
*Must ship common carrier.

These Aluminum Thresholds for commercial doors are fabricated from extruded aluminum in both satin anodized and duranodic bronze finishes. All are furnished with screws for installation. All of the above models come in pre-cut lengths for single or double doors, and also in full stock lengths that you can cut to the exact size you require. Single and double door sizes can be shipped economically via small package carriers, while the full stock lengths must ship via common carrier. All Thresholds can be made available for pick up at any U.S. Aluminum or C.R. Laurence Service Center.

NEED MORE INFO? Full details and specifications for all C.R. Laurence brand Thresholds can be seen at **crlaurence.com**. Enter the Part Number into the Search Box to view complete details.

ENTRANCES

Accessories

Aluminum and Stainless Thresholds

- Aluminum and Bronze Finishes in Three Lengths
- A Variety of Available Widths and Heights
- Furnished With Screws for Installation

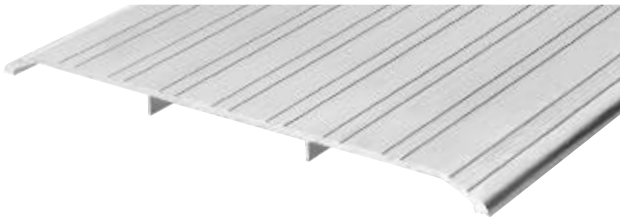

MODEL 492A AND 492D
8" COMMERCIAL SADDLE THRESHOLD

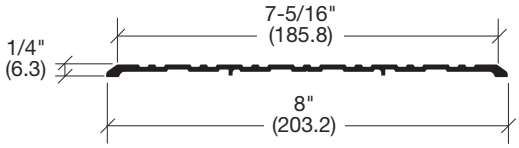

• AVAILABLE IN THREE LENGTHS AND TWO FINISHES

ALUMINUM PART NO.	BRONZE PART NO.	LENGTH
492A36	492D36	36-1/2" (927)
492A72	492D72	73" (1854)
492A185	492D185	185" (4.7 m)*

Minimum order: 1 each. All Thresholds can be combined for quantity pricing.
*Must ship common carrier.

MODEL TH019A AND TH019D
9" COMMERCIAL SADDLE THRESHOLD

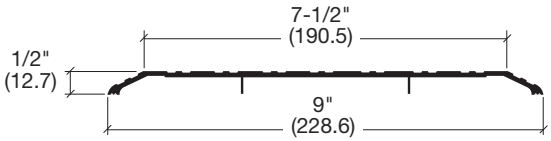

• BEST THRESHOLD IN APPLICATIONS WHERE PA110 SERIES PANICS OR BOTTOM ENGAGING DEADBOLT HANDLES ARE USED

ALUMINUM PART NO.	BRONZE PART NO.	LENGTH
TH019A36	TH019D36	36-1/2" (927)
TH019A72	TH019D72	73" (1854)
TH019A185	TH019D185	185" (4.7 m)*

Minimum order: 1 each. All Thresholds can be combined for quantity pricing.
*Must ship common carrier.

MODEL TH074
4" STAINLESS STEEL SADDLE THRESHOLD

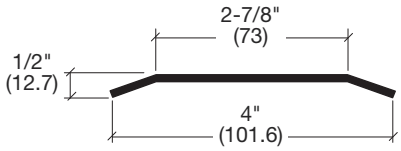

• STAINLESS STEEL FOR CORROSIVE ENVIRONMENTS

ALUMINUM PART NO.	LENGTH
TH074SS36	36-1/2" (927)

Minimum order: 1 each. All Thresholds can be combined for quantity pricing.

MODEL TH075
5" STAINLESS STEEL SADDLE THRESHOLD

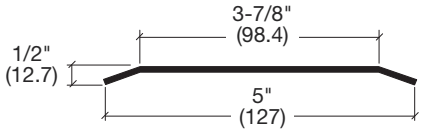

• STAINLESS STEEL FOR CORROSIVE ENVIRONMENTS

ALUMINUM PART NO.	LENGTH
TH075SS36	36-1/2" (927)

Minimum order: 1 each. All Thresholds can be combined for quantity pricing.

These Aluminum Thresholds for commercial doors are fabricated from extruded aluminum in both satin anodized and duranodic bronze finishes. Two models are fabricated from stainless steel. All are furnished with screws for installation. Models come in pre-cut lengths for single or double doors, some also in full stock lengths that you can cut to the exact size you require. Single and double door sizes can be shipped economically via small package carriers, while the full stock lengths must ship via common carrier. All Thresholds can be made available for pick up at any U.S. Aluminum or C.R. Laurence Service Center.

NEED MORE INFO? Full details and specifications for all C.R. Laurence brand Thresholds can be seen at **crlaurence.com**. Enter the Part Number into the Search Box to view complete details.

ENTRANCES

Accessories

Aluminum Thresholds

- Aluminum and Bronze Finishes in Three Lengths
- A Variety of Available Widths and Heights
- Furnished With Screws for Installation

MODEL 39A
3" HALF SADDLE THRESHOLD

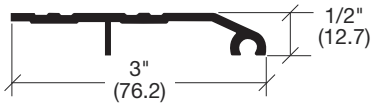

- TYPICALLY USED TO MEET WITH IRREGULAR FLOOR SURFACE

ALUMINUM PART NO.	LENGTH
39A36	36-1/2" (927)

Minimum order: 1 each. All Thresholds can be combined for quantity pricing.

MODEL 255A AND 255D
5" OFFSET SADDLE THRESHOLD

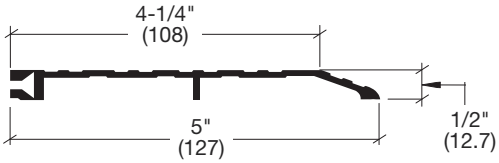

- FIRE RATED, SMOKE TESTED, UL LISTED
- BARRIER FREE

ALUMINUM PART NO.	BRONZE PART NO.	LENGTH
255A36	255D36	36-1/2" (927)
255A72	255D72	73" (1854)
255A185	255D185	185" (4.7 m)*

Minimum order: 1 each. All Thresholds can be combined for quantity pricing.
*Must ship common carrier.

MODEL 46VA
5" PANIC TYPE THRESHOLD

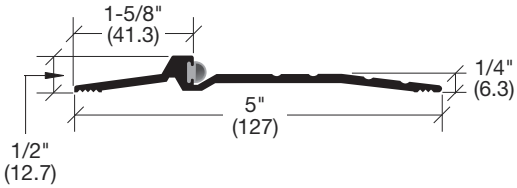

- COMMONLY USED WITH 5" WIDE STOREFRONT TUBING
- BULB SEAL INCLUDED

ALUMINUM PART NO.	LENGTH
46VA36	36-1/2" (927)
46VA72	73" (1854)
46VA185	185" (4.7 m)*

Minimum order: 1 each. All Thresholds can be combined for quantity pricing.
*Must ship common carrier.

MODEL 47VA
5" PANIC TYPE THRESHOLD

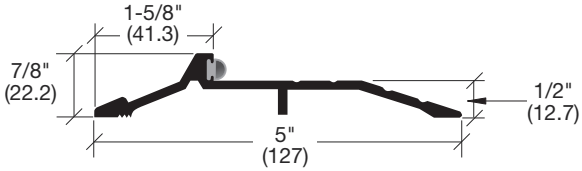

- COMMONLY USED WITH SURFACE APPLIED VERTICAL ROD EXIT DEVICE
- BULB SEAL INCLUDED

ALUMINUM PART NO.	LENGTH
47VA36	36-1/2" (927)
47VA72	73" (1854)
47VA185	185" (4.7 m)*

Minimum order: 1 each. All Thresholds can be combined for quantity pricing.
*Must ship common carrier.

These Aluminum Thresholds for commercial doors are fabricated from extruded aluminum in both satin anodized and duranodic bronze finishes. All are furnished with screws for installation. Models come in pre-cut lengths for single or double doors, some also in full stock lengths that you can cut to the exact size you require. Single and double door sizes can be shipped economically via small package carriers, while the full stock lengths must ship via common carrier. All Thresholds can be made available for pick up at any U.S. Aluminum or C.R. Laurence Service Center.

NEED MORE INFO? Full details and specifications for all C.R. Laurence brand Thresholds can be seen at **crlaurence.com**. Enter the Part Number into the Search Box to view complete details.

ENTRANCES

Accessories

Aluminum Thresholds

- **Aluminum Finish in Three Lengths**
- **Furnished With Screws for Installation**

MODEL 88A
6" RAMP THRESHOLD

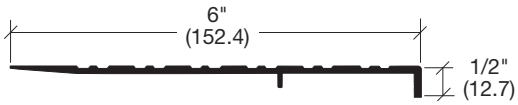

These Aluminum Thresholds for commercial doors are fabricated from extruded aluminum in a satin anodized finish. Furnished with screws for installation. Above model comes in pre-cut lengths for single or double doors, and also in full stock lengths that you can cut to the exact size you require. Single and double door sizes can be shipped economically via small package carriers, while the full stock lengths must ship via common carrier. All Thresholds can be made available for pick up at any U.S. Aluminum or C.R. Laurence Service Center.

- **TYPICALLY USED TO MEET WITH IRREGULAR FLOOR SURFACE**

ALUMINUM PART NO.	LENGTH
88A36	36-1/2" (927)
88A72	73" (1854)
88A185	185" (4.7 m)*

Minimum order: 1 each. All Thresholds can be combined for quantity pricing.
*Must ship common carrier.

CUSTOM COMMERCIAL SADDLE THRESHOLDS AND FLOOR CLOSER COVER PLATES

U.S. Aluminum custom fabricates Saddle Thresholds and Floor Closer Cover Plates. For information contact our Technical Sales Department at (800) 262-5151.

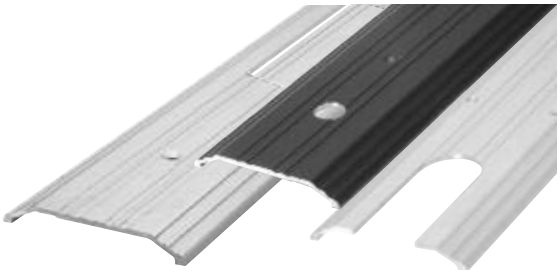

PVC BARRIER STRIP

PVC Barrier Strip protects the aluminum threshold from moisture absorbed through the stucco finish of the exterior wall. 96" (2.4 m) Barrier Strip measures 4-3/8" (111.1) wide, and must cover area in contact with stucco wall to provide protection to the aluminum.

PART NO.	LENGTH	FINISH
THBS8	8' (2.4 m)	Black

Minimum order: 1 each.

THRESHOLD INSTALLATION TOOLS AND SUPPLIES

U.S. Aluminum offers a complete selection of tools and supplies for the installation of our Aluminum and Stainless Steel Thresholds.

J

CURTAIN WALLS

- Series 2100/2200
- Series 3150
- Series 3250
- Series 3252/3252SG
- Series HP3253/HP3253SG
- Series 4250/4250T
- Series 4500/4500SG

Toll Free Phone Service
(800) 262-5151
Ext. 5305

Toll Free Fax Service
(866) 262-3299
U.S. and Canada

CRL®
U.S. ALUMINUM

usalum.com

J CURTAIN WALLS

Georgia State University Alpharetta Center
Alpharetta, GA

U.S. Aluminum offers Curtain Wall Systems that are ideal for low to mid-rise structures. We offer cost efficient and versatile systems with clean lines and superb performance characteristics. Systems are available that may be glazed from the interior or exterior using E.P.D.M. glazing gaskets, and all series are compatible with most U.S. Aluminum Entrance Doors, Sunshades, and Light Shelves. Dual colors can be achieved with these systems simply by specifying different finishes for the exterior face covers and interior mullions. Glazing options include 1/4" (6), 1" (25) insulating glass, and 2" (51 mm) triple glaze.

U.S. Aluminum Curtain Wall Systems can be custom modified to the specific requirements of your project. Our product specialists will work with you to ensure the Curtain Wall System you order from us will meet your needs and the approval of your clients.

For a complete Glossary of Common Terms see pages 62-P1 thru 68-P1.

SYSTEM — PAGES

- Series 2100/2200 Thermally Improved ..... 01-J1 thru 30-J1
- Series 3150 Thermally Improved ..... 01-J2 thru 28-J2
- Series 3250 Thermally Improved ..... 01-J3 thru 29-J3
- Series 3252/3252SG High Performance Thermally Broken ..... 01-J4 thru 12-J4
- Series HP3253/HP3253SG High Performance Thermally Broken ... 01-J5 thru 14-J5
- Series 4250/4250T Thermally Broken ..... 01-J6 thru 18-J6
- Series 4500/4500SG Thermally Isolated ..... 01-J7 thru 29-J7

For information or other assistance, use our toll free phone or fax service numbers from anywhere in the U.S. or Canada

Toll Free Phone (800) 262-5151 Ext. 5305 Toll Free Fax (866) 262-3299

Contact us through our web site at usalum.com

CURTAIN WALLS

Table of Contents

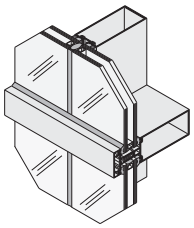

SERIES 2100
Structural Silicone Vertical Glazed Curtain Wall

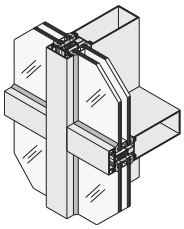

SERIES 2200
Captured Vertical Glazed Curtain Wall

Thermally Improved
- Series 2100
- Series 2200

SECTION J1

PAGE

SPECIFICATIONS ..... 02-J1 and 03-J1
TECHNICAL DATA 04-J1
SPECIAL FEATURES ..... 05-J1 and 06-J1
SHEAR BLOCK ASSEMBLY DETAILS ..... 07-J1 and 08-J1
SCREW SPLINE ASSEMBLY DETAILS ..... 09-J1 and 10-J1
PREASSEMBLED MULTI-LIGHT UNITS ..... 11-J1 and 12-J1
CORNER DETAIL 13-J1
TRANSITION DETAIL 14-J1
TYPICAL DOOR DETAILS ..... 15-J1 thru 17-J1
WINDLOAD CHARTS ..... 18-J1 thru 24-J1
DEADLOAD CHARTS ..... 25-J1 and 26-J1
ACCESSORIES ..... 27-J1 thru 30-J1

Project: Hewitt Associates Building; Lincolnshire, IL

Due to the diversity in state/provincial, local, and federal laws and codes that govern the design and application of architectural products, it is the responsibility of the individual architect, owner, and installer to ensure that products selected for use on projects comply with all applicable building codes and laws. U.S. Aluminum exercises no control over the use or application of its products, glazing materials, and operating hardware, and assumes no responsibility thereof.

The rapidly changing technology within the architectural aluminum products industry demands that U.S. Aluminum reserve the right to revise, discontinue or change any product line, specification or electronic media without prior written notice.

NOTE: Dimensions in parentheses ( ) are millimeters unless otherwise noted.
Other metric units shown in this publication are:

m - meter	Kg - kilogram
Pa - pascal	KPa - kilopascal
MPa - megapascal	

CURTAIN WALLS

Specifications

Thermally Improved
- Series 2100
- Series 2200

SECTION 08 44 13 ALUMINUM CURTAIN WALL SYSTEMS

SERIES	FACE WIDTH	BACK MEMBER DEPTH	OVERALL DEPTH	GLAZING INFILL	GLAZING METHOD
2100 2200	2" (50.8)	2-7/8" (73) 4" (101.6) 5" (127)	4-15/16" (125.4) 6-1/16" (154) 7-1/16" (179.4)	1" (25)	Exterior

I. GENERAL DESCRIPTION

Work Included: Furnish all necessary materials, labor, and equipment for the complete installation of aluminum framing as shown on the drawings and specified herein. (*Specifier Note: It is suggested that related items such as aluminum entrance doors, glass, and sealants be included whenever possible.*)

Work Not Included: Structural support of the framing system, interior closures, and trim. (*Specifier list other exclusions*).

Related Work Specified Elsewhere: (*Specifier list*).

QUALITY ASSURANCE

Drawings and specifications are based on Series 2100 or Series 2200 Curtain Wall Systems as manufactured by U.S. Aluminum. Whenever substitute products are to be considered, supporting technical literature, samples, drawings, and performance data must be submitted 10 days prior to bid in order to make a valid comparison of the products involved. Test reports certified by an independent test laboratory must be made available upon request.

PERFORMANCE REQUIREMENTS

Air Infiltration: shall not exceed 0.06 cfm/ft^2 (0.0003 m^3 /sm^2) when tested in accordance with ASTM E283 at a pressure differential of 6.24 psf (300 Pa.)

Water Infiltration: shall be tested in accordance with ASTM E331 with a pressure differential of 15.0 psf (700 Pa.)

Thermally, the grid members shall have a condensation resistance equal to or better than the area along the bottom of a 1" (25) sealed glass unit with standard metal spacer edge construction.

(*Note to Specifier: If system is a window application, add the following*): Windows shall conform to the following requirements of CSA standard CAN/CSA-A440 Windows.

Air Infiltration: shall meet the FIXED rating.

Water Infiltration: shall meet the (select up to B7) rating. Wind load resistance shall meet the (select up to C5) rating. Intermediate mullions and horizontals shall be designed to withstand loading in accordance with the National Building Code of Canada.

Condensation resistance temperature index for the framing system shall be a minimum of 60.6.

Structural performance shall be based on CSA standard CAN3-S157 "Strength Design in Aluminum" and a maximum deflection of L/175 of the span.

Testing Procedures: ASTM 283, E 331, and E 330 - Laboratory performance testing. AAMA 503-08 - Newly installed curtain walls. AAMA 511-08 - Installed curtain walls after six months.

II. PRODUCTS MATERIALS

Extrusions shall be 6063-T5 alloy and temper (ASTM B221 alloy T5 temper).

Fasteners, where exposed, shall be aluminum, stainless steel or zinc plated steel in accordance with ASTM A 164.

Perimeter anchors shall be aluminum or steel, providing the steel is properly isolated from the aluminum. Glazing gaskets shall be E.P.D.M. elastomeric extrusions. System shall provide conventional glass support at horizontal, vertical, and perimeter members.

Series 2100 shall provide structural silicone support at intermediate verticals. Horizontal members and jamb configurations shall allow for pockets to receive E.P.D.M. elastomeric extruded glazing gaskets. Interior vertical glass spacers shall be extruded silicone compatible E.P.D.M.

All materials that come in contact with the silicone should be tested for compatibility. Samples of aluminum vertical mullions should be submitted to the silicone manufacturer for adhesion evaluation.

FINISH

All exposed framing surfaces shall be free of scratches and other serious blemishes. Aluminum extrusions shall be given a caustic etch followed by an anodic oxide treatment to obtain...

(*Specify one of the following*):

_____#11 Clear anodic coating

_____#22 Dark Bronze anodic coating

_____#33 Black anodic coating

A Fluoropolymer paint coating conforming with the requirements of AAMA 2605. Color shall be (*Specify a U.S. Aluminum standard color*).

FABRICATION

All mullions and horizontals shall have flexible (PVC) thermal break material located on exterior side of glass plane. Exterior glazing seal gasket shall be secured by extruded aluminum pressure plates fastened to main grid members. Provisions shall be made at all sealed horizontals to weep moisture accumulation to the exterior. A cover shall be snapped over pressure plate to show only a sharp, uninterrupted exterior profile.

Series 2200 framing members shall provide for straight-in glazing on all sides, with clean sight lines and no projecting stops or face joints. Vertical and horizontal framing members shall have a nominal width of 2" (50.8). Overall depth of system shall be (*Specify*). System shall provide for horizontal framing so that all fasteners at intersection of horizontal and vertical members will be concealed. There shall be no exposed fasteners at perimeter sections. Series 2100 system shall accommodate 1" (25) glazing infill and framing system shall provide a flush glazing appearance with no intermediate verticals visible from the outside.

CURTAIN WALLS

Specifications

Thermally Improved
- Series 2100
- Series 2200

SECTION 08 44 13 ALUMINUM CURTAIN WALL SYSTEMS

III. EXECUTION INSTALLATION

All glass framing shall be set in correct locations as shown in the details and shall be level, square, plumb, and in alignment with other work in accordance with the manufacturer's installation instructions and approved shop drawings. All joints between framing and the building structure shall be sealed in order to secure a watertight installation.

Glass shall be set from outside. Structural silicone shall be applied from inside and silicone weatherseal from outside (after structural silicone has fully cured). Reusable twist-in temporary glass retainers shall be used during structural curing period. Structural silicone must be applied in strict accordance with the silicone manufacturer's instruction for surface preparation, priming, application, and curing time.

PROTECTION AND CLEANING

After installation the General Contractor shall adequately protect exposed portions of aluminum surfaces from damage by grinding and polishing compounds, plaster, lime, acid, cement or other contaminants. The General Contractor shall be responsible for final cleaning.

Project: Meydenbauer Convention Center; Bellevue, WA

CURTAIN WALLS

Technical Data

Thermally Improved
- Series 2100
- Series 2200

Based on the popular Series 3150/3250, Series 2100/2200 Curtain Wall Systems offer a reduced sightline for low to mid-rise applications where exterior glazing is desired. Complementing the efficiency of insulating glass, Series 2100/2200 Curtain Walls are thermally improved by a continuous thermal spacer interlocked with the horizontal and vertical pressure plates. Dual colors can be achieved by specifying different finishes for the exterior face covers and interior mullions. Extruded aluminum shear blocks with concealed mechanical attachment allows for a concealed horizontal to vertical joinery without exposed screws. These joint intersections also have concealed Injection Molded End Dams for controlling any infiltrated water. Series 2100/2200 Curtain Walls are designed for both Shear Block and Screw Spline installation. The Screw Spline System incorporates a unique split vertical mullion for straight-in installation of each bay, special perimeter members for easy anchorage to the structure, and the option to shop install and seal end dams. Three mullion depths are offered to accommodate various structural loads.

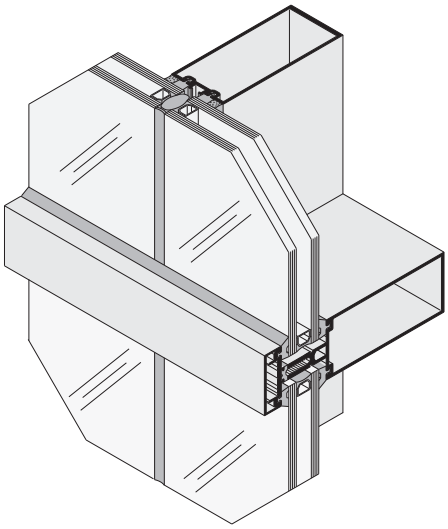

SERIES 2100
Structural Silicone Vertical Glazed Curtain Wall

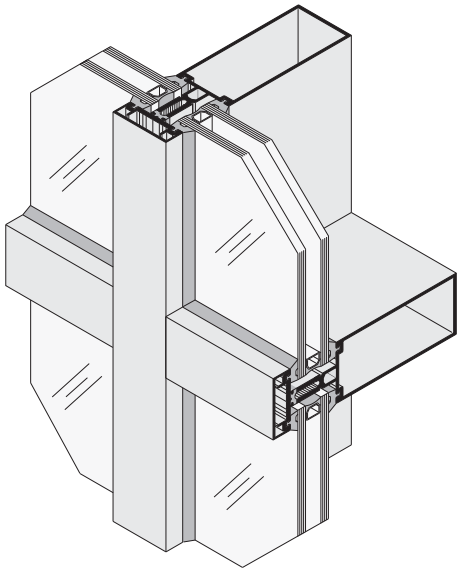

SERIES 2200
Captured Vertical Glazed Curtain Wall

SERIES	WIDTH	DEPTH	GLAZING INFILL	APPLICATIONS
2100 2200	2" (50.8)	4-15/16" (125.4) 6-1/16" (154) 7-1/16" (179.3)	1" (25) and/or 1/4" (6)	Low-Rise to Mid-Rise Buildings Where Exterior Glazing is Desired

For custom size and profile extrusions please visit **usalum.com**

GLASS SIZES*	
For Series 2100 Glass Width	= Daylight Opening + 1-5/8" (41.2) at Intermediate = Daylight Opening + 1-5/16" (33.3) at Jambs
Glass Height	= Daylight Opening + 1" (25.4)
For Series 2200 Glass Width	= Daylight Opening + 1" (25.4)
Glass Height	= Daylight Opening + 1" (25.4)

*These formulae do not take into account glass tolerances. Consult glass manufacturer before ordering glass.

CURTAIN WALLS

Special Features

Thermally Improved • Series 2100

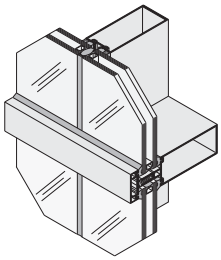

SERIES 2100
Structural Silicone Vertical Glazed Curtain Wall

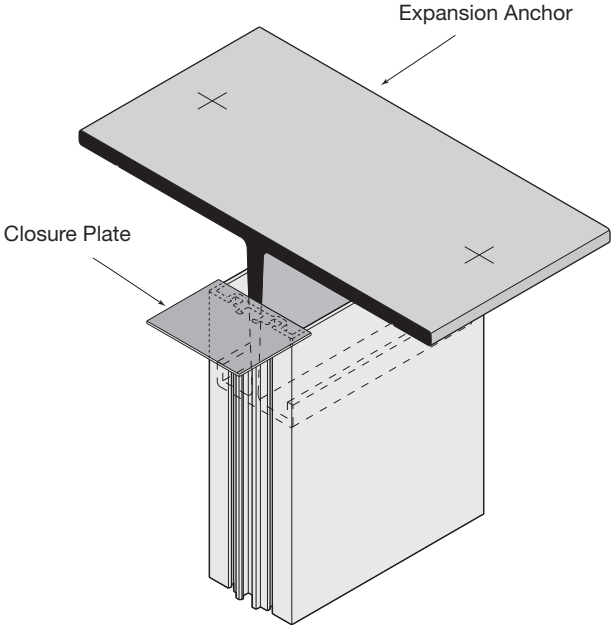

Injection Molded Closure Plates at top and bottom of verticals ensure a continuous perimeter seal. See page 29-J1 for additional information.

Top and Bottom "T" Anchors provide for expansion and positive attachment to surrounding conditions (Shear Block installation only). See pages 27-J1 and 28-J1 for additional information.

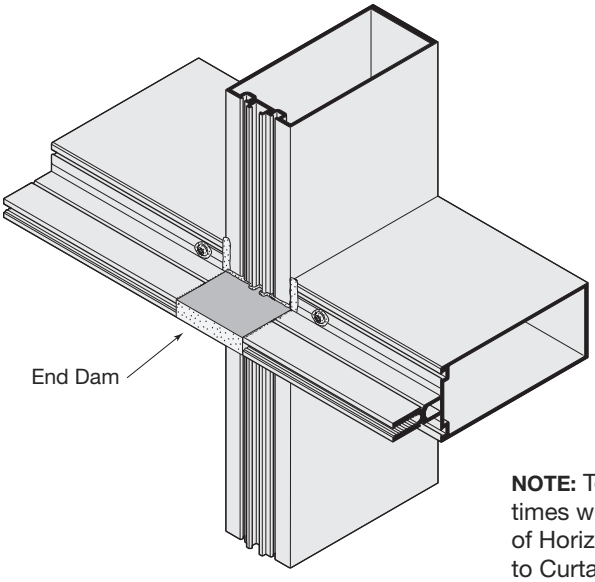

Injection Molded End Dams are sealed in place to control infiltrated water. See page 29-J1 for additional information.

NOTE: To accelerate installation times with pinpoint accuracy of Horizontal Shear Blocks to Curtain Wall Mullions see pages 56-P1 and 57-P1.

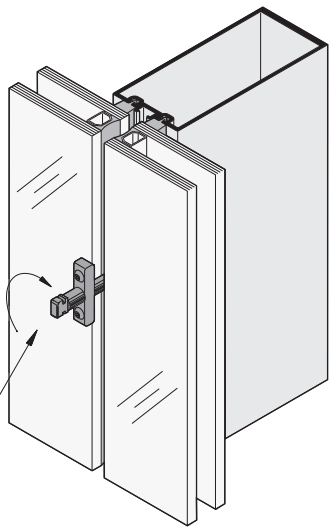

Reusable Twist-In Temporary Glass Retainers are used to support the glass until the structural silicone has fully cured in accordance with silicone manufacturer's recommendations. See page 28-J1 for additional information.

CURTAIN WALLS

Special Features

Thermally Improved • Series 2200

Two Piece Vertical Mullions offer Screw Spline attachment of horizontals, and allow for shop assembly of frame panels.

Unique perimeter members simplify anchorage to structure.

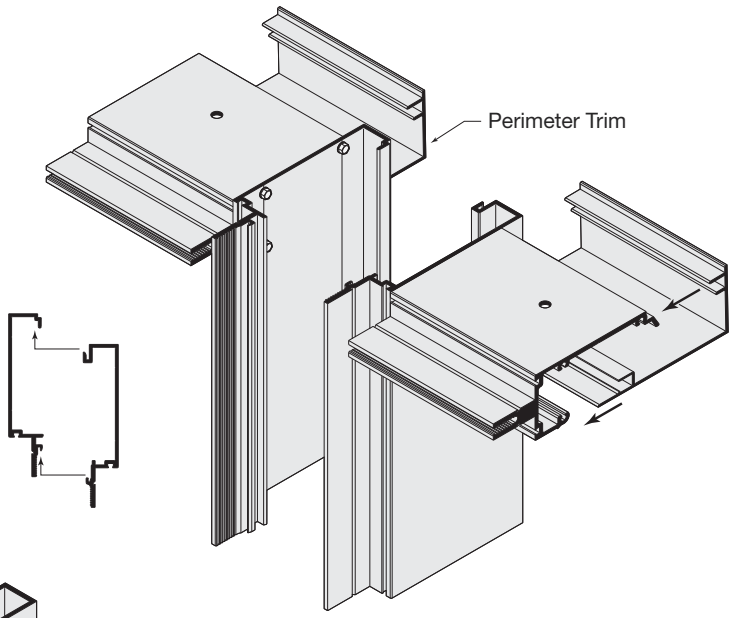

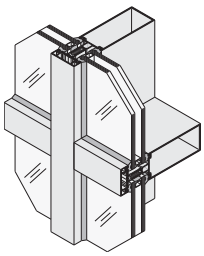

SERIES 2200
Captured Vertical Glazed Curtain Wall

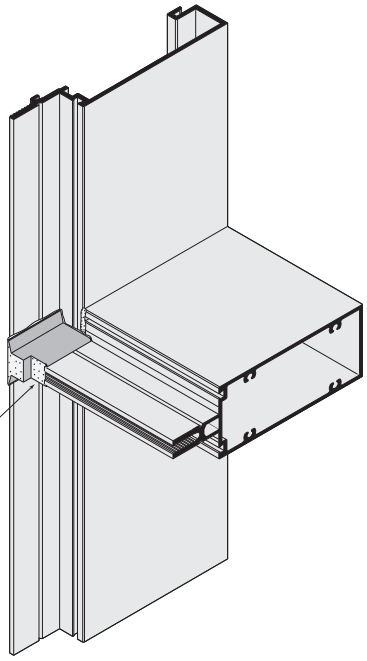

Injection Molded End Dams are sealed in place to control infiltrated water. See page 29-J1 for additional information.

NOTE: To accelerate installation times with pinpoint accuracy of Horizontal Shear Blocks to Curtain Wall Mullions see pages 56-P1 and 57-P1.

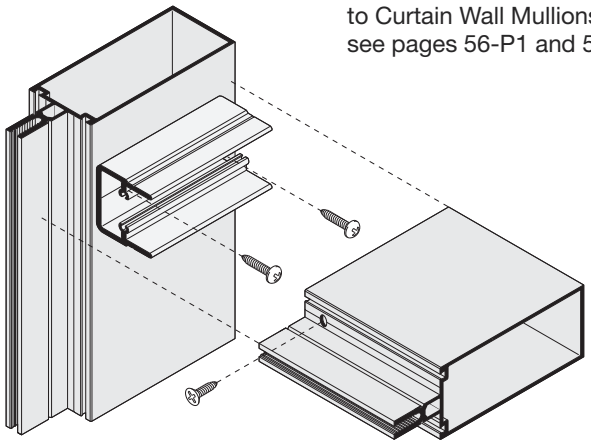

Extruded Aluminum Shear Blocks are furnished to ensure extra strong horizontal to vertical joinery. See page 29-J1 for additional information.

CURTAIN WALLS

Typical Details

Thermally Improved
- Series 2100
- Series 2200

VERTICAL MULLIONS SHEAR BLOCK ASSEMBLY FOR 1" (25) GLAZING

Gaskets **NP430** for Exterior and **NP420** for Interior, Typical. **SP250** Spacer Used at All Butt Glazed Locations.

NOTE: Part numbers shown are available in 24' (7.3 m) stock lengths. Visit **usalum.com** for more information.

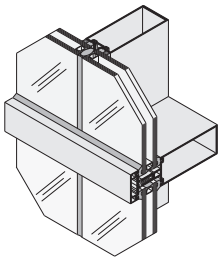

SERIES 2100
Structural Silicone Vertical Glazed Curtain Wall

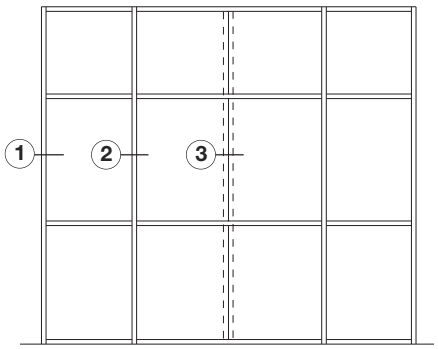

TYPICAL ELEVATION

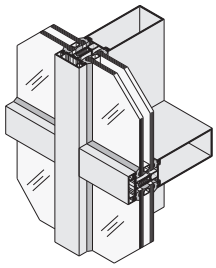

SERIES 2200
Captured Vertical Glazed Curtain Wall

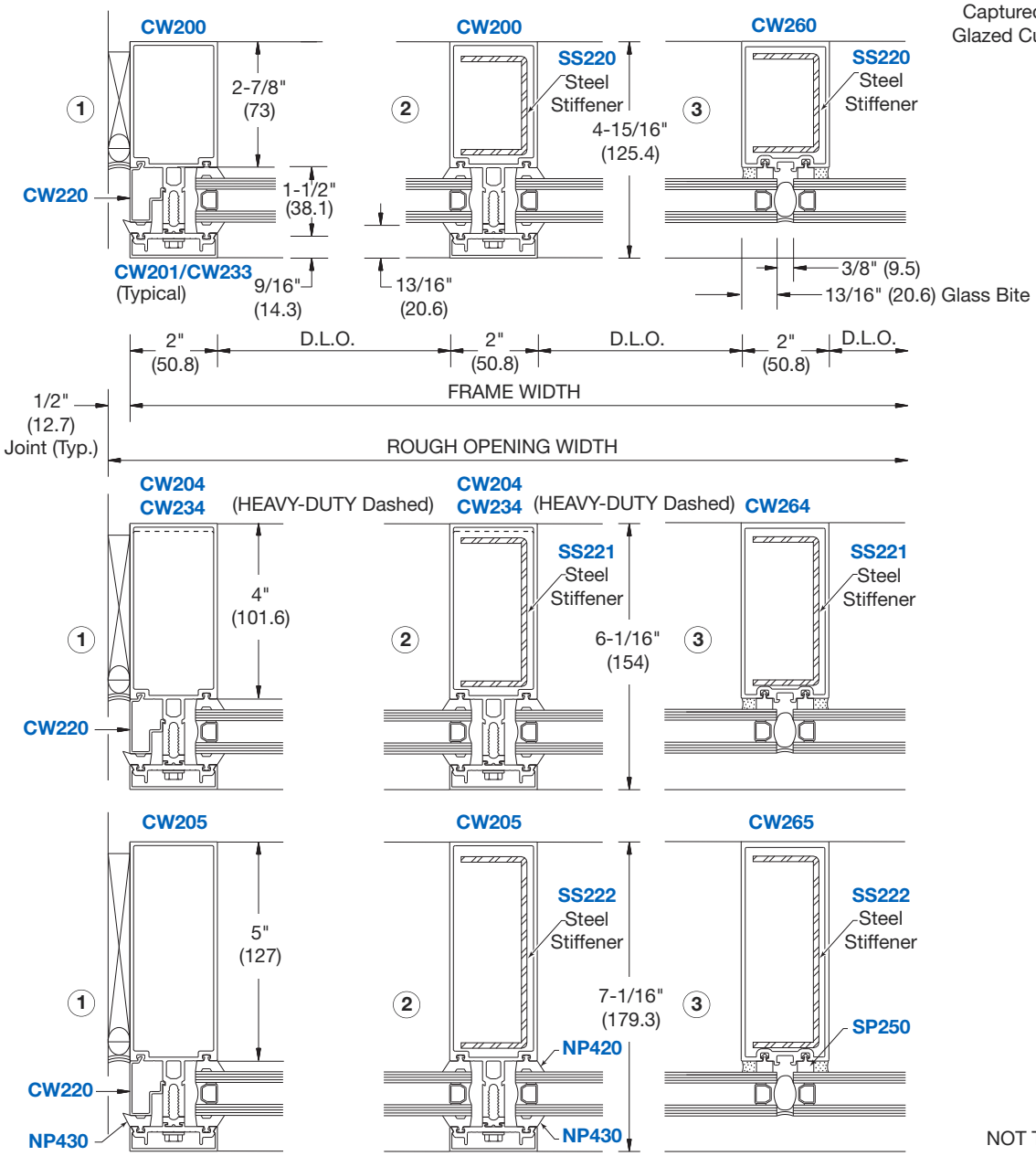

NOT TO SCALE

CURTAIN WALLS

Typical Details

Thermally Improved
- Series 2100
- Series 2200

HORIZONTAL MULLIONS SHEAR BLOCK ASSEMBLY FOR 1" (25) GLAZING

Gaskets **NP430** for Exterior and **NP420** for Interior, Typical.

NOTE: Part numbers shown are available in 24' (7.3 m) stock lengths. Visit **usalum.com** for more information.

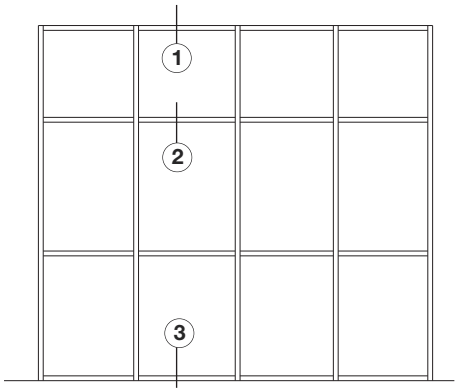

TYPICAL ELEVATION

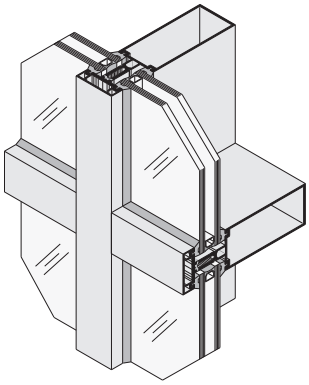

SERIES 2200
Captured Vertical Glazed Curtain Wall

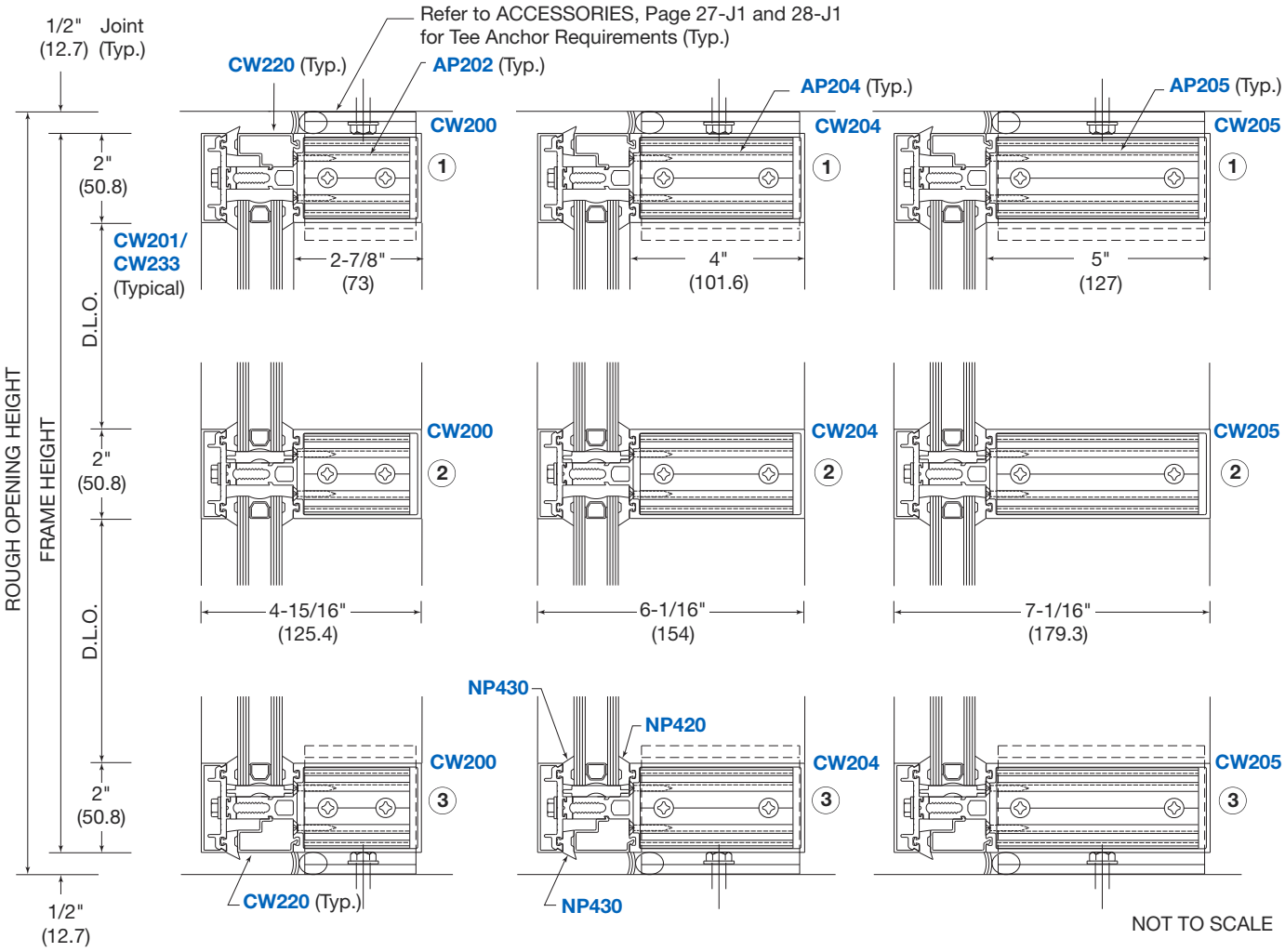

CURTAIN WALLS

Typical Details

Thermally Improved
- Series 2100
- Series 2200

VERTICAL MULLIONS SCREW SPLINE ASSEMBLY FOR 1" (25) GLAZING

Gaskets **NP430** for Exterior and **NP420** for Interior, Typical. **SP250** Spacer Used at All Butt Glazed Locations.

NOTE: Part numbers shown are available in 24' (7.3 m) stock lengths. Visit **usalum.com** for more information.

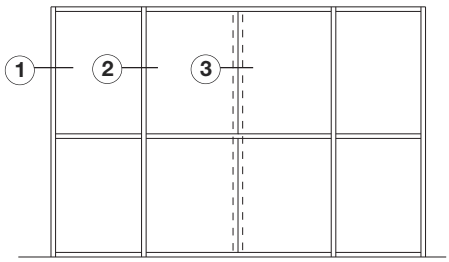

TYPICAL ELEVATION

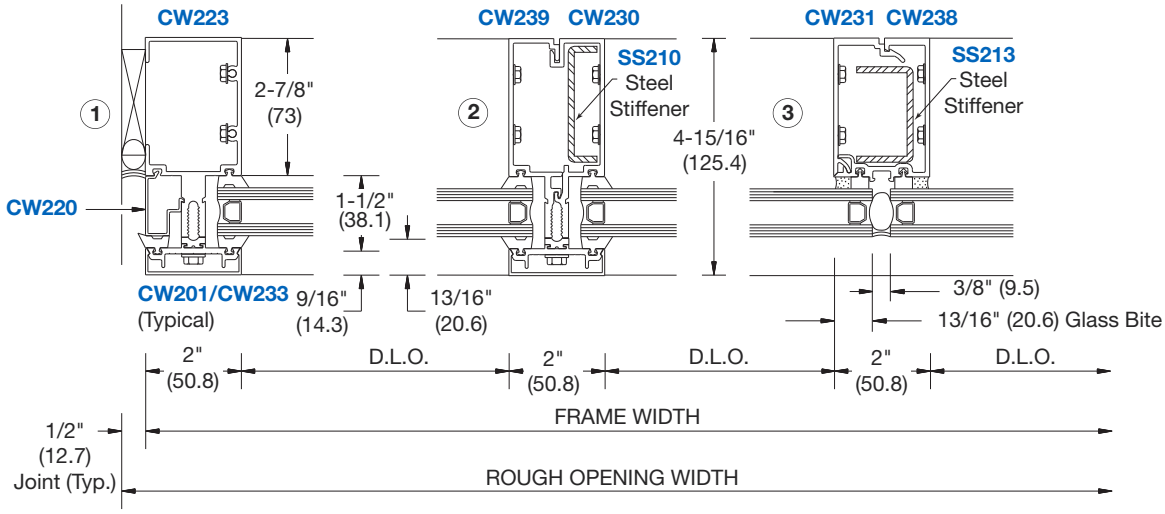

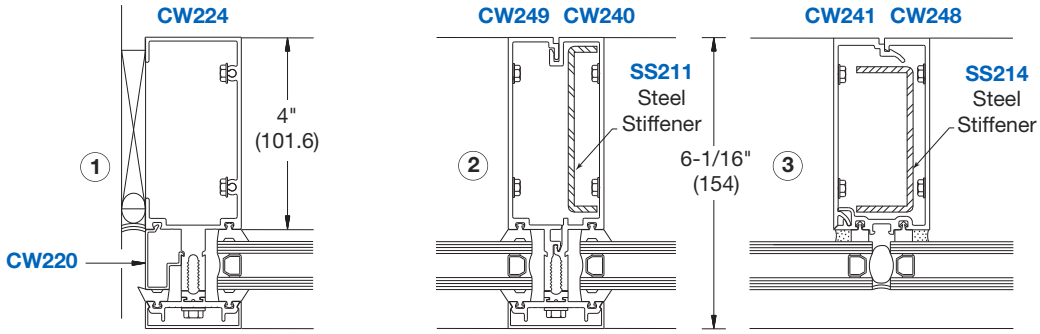

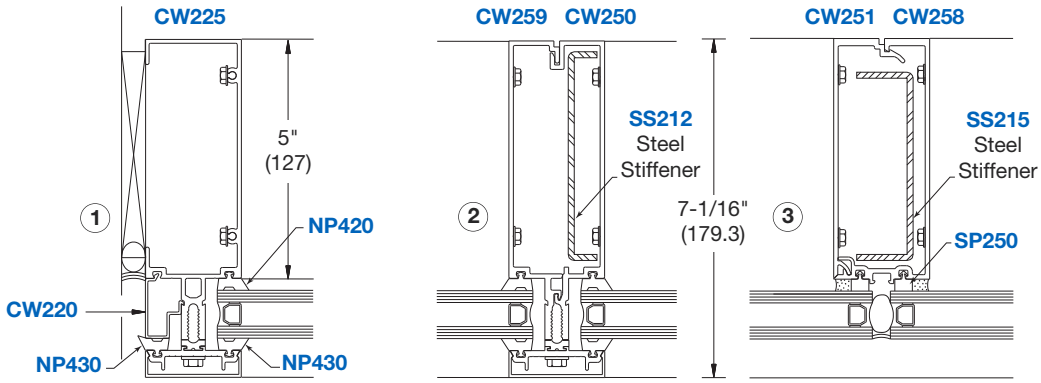

NOT TO SCALE

CURTAIN WALLS

Typical Details

Thermally Improved
- **Series 2100**
- **Series 2200**

HORIZONTAL MULLIONS SCREW SPLINE ASSEMBLY FOR 1" (25) GLAZING

Gaskets **NP430** for Exterior and **NP420** for Interior, Typical.

NOTE: Part numbers shown are available in 24' (7.3 m) stock lengths. Visit **usalum.com** for more information.

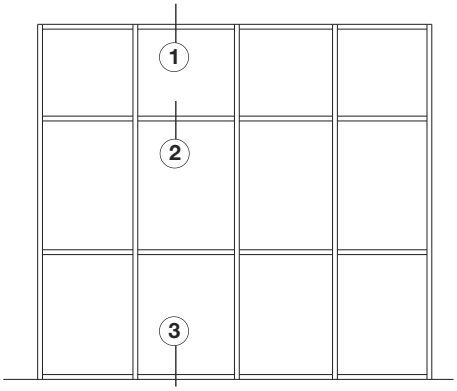

TYPICAL ELEVATION

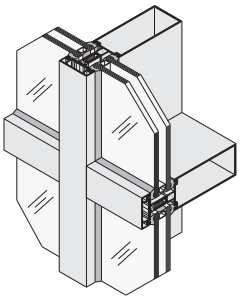

SERIES 2200
Captured Vertical Glazed Curtain Wall

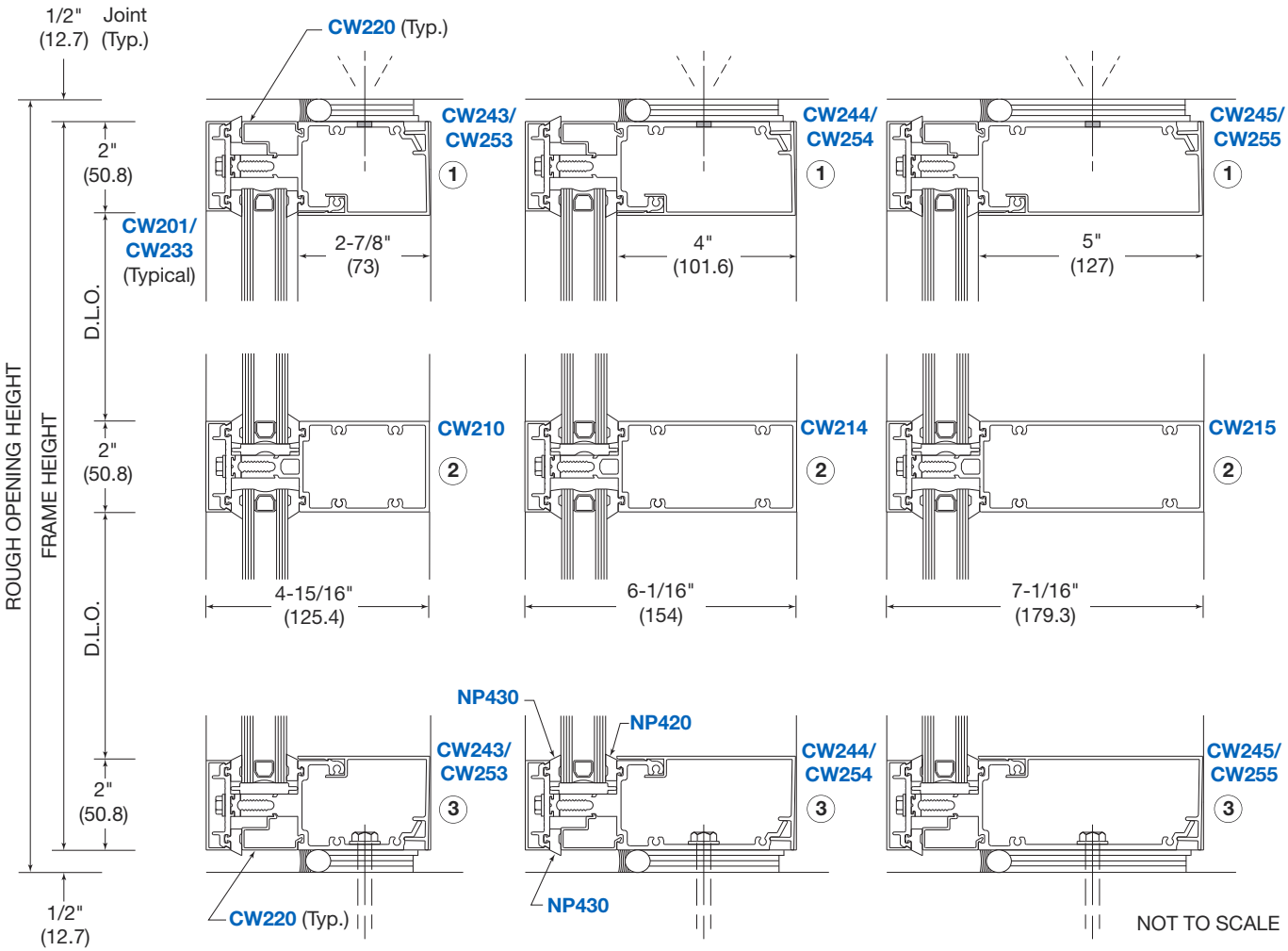

CURTAIN WALLS

Typical Details

VERTICAL MULLIONS PREASSEMBLED MULTI-LIGHT UNITS FOR 1" (25) GLAZING

Thermally Improved
- Series 2100
- Series 2200

Gaskets **NP430** for Exterior and **NP420** for Interior, Typical.

NOTE: Part numbers shown are available in 24' (7.3 m) stock lengths. Visit **usalum.com** for more information.

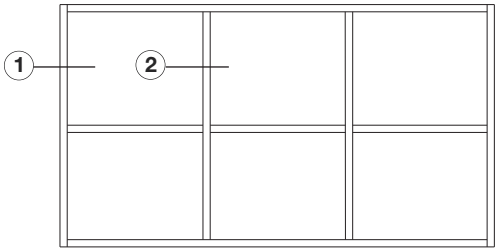

TYPICAL ELEVATION

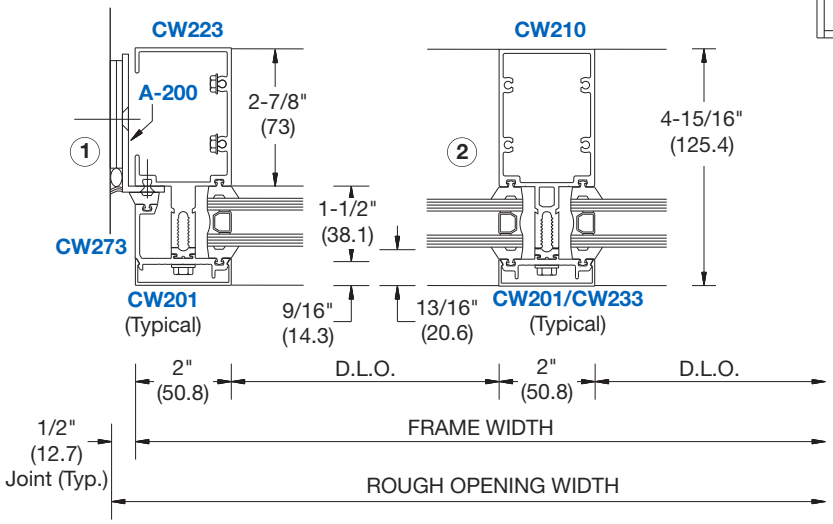

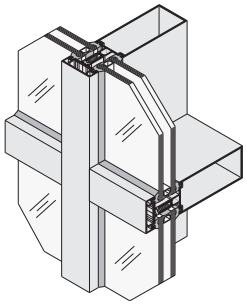

SERIES 2200
Captured Vertical Glazed Curtain Wall

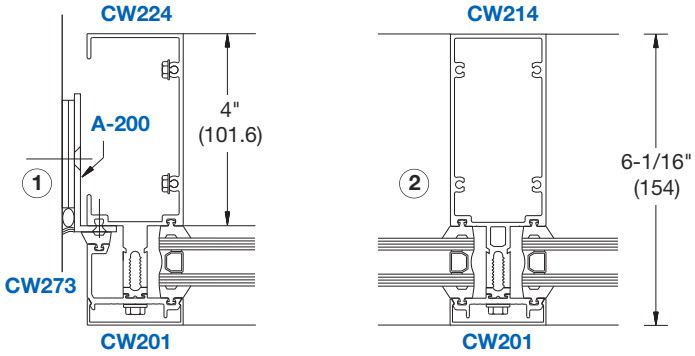

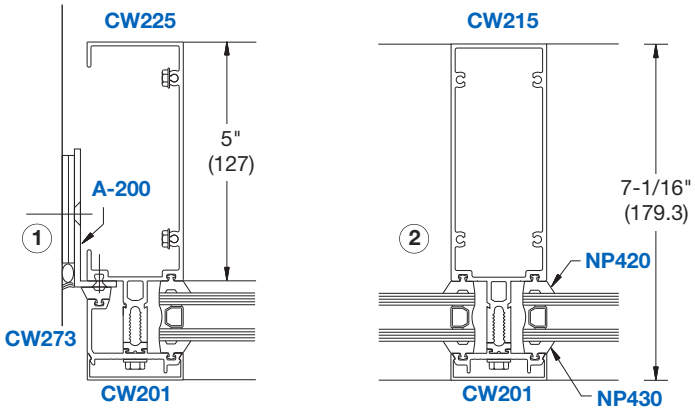

NOT TO SCALE

CURTAIN WALLS

Typical Details

Thermally Improved
- Series 2100
- Series 2200

HORIZONTAL MULLIONS PREASSEMBLED MULTI-LIGHT UNITS FOR 1" (25) GLAZING

Gaskets **NP430** for Exterior and **NP420** for Interior, Typical.

NOTE: Part numbers shown are available in 24' (7.3 m) stock lengths. Visit **usalum.com** for more information.

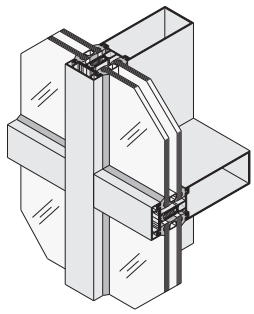

SERIES 2200
Captured Vertical Glazed Curtain Wall

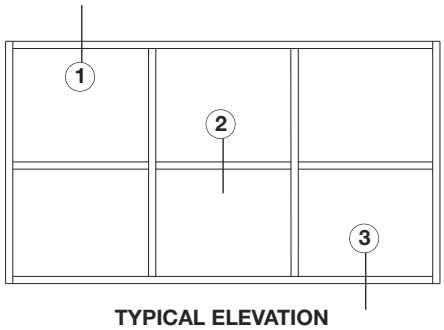

TYPICAL ELEVATION

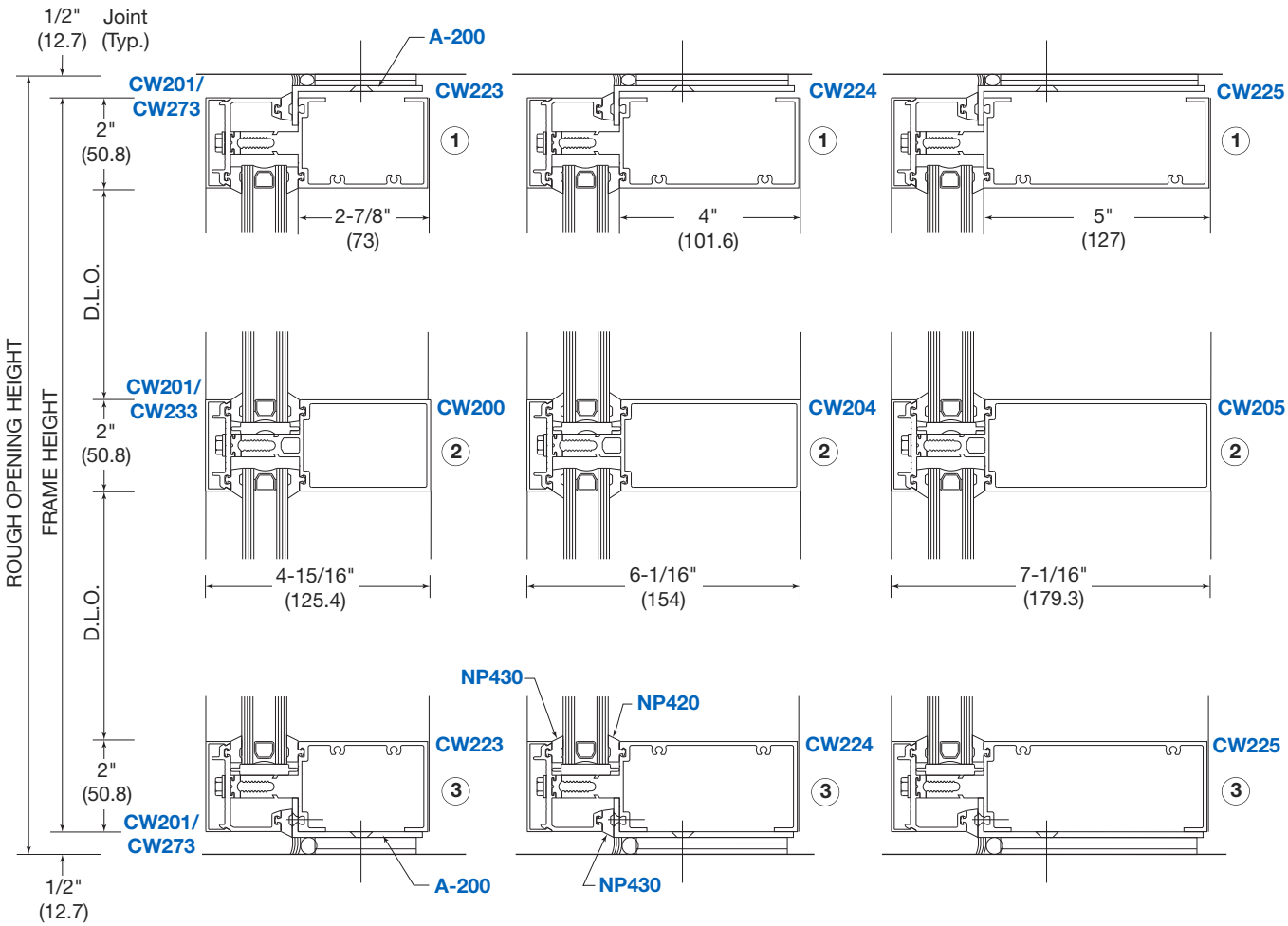

NOT TO SCALE

CURTAIN WALLS

Typical Details

90 DEGREE INSIDE AND OUTSIDE CORNER CONDITION FOR 1" (25) GLAZING

Thermally Improved
- Series 2100
- Series 2200

NOTE: Part numbers shown are available in 24' (7.3 m) stock lengths. Visit **usalum.com** for more information.

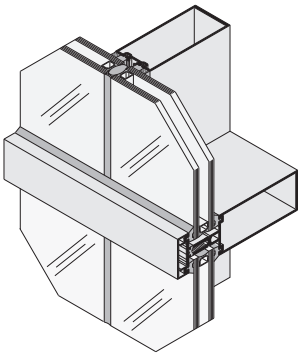

SERIES 2100
Structural Silicone Vertical Glazed Curtain Wall

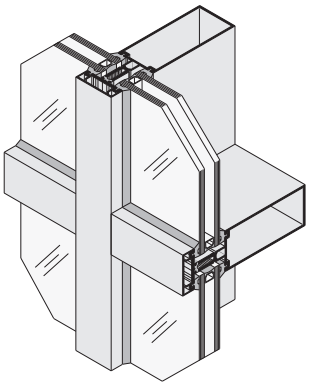

SERIES 2200
Captured Vertical Glazed Curtain Wall

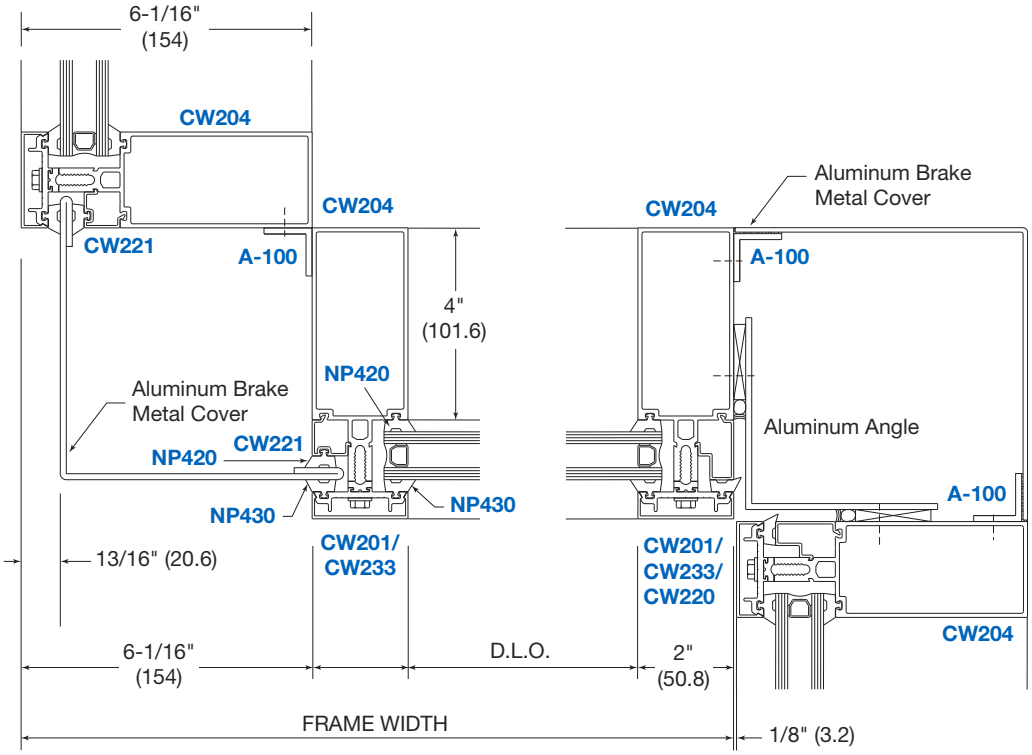

NOT TO SCALE

CURTAIN WALLS

Typical Details

1/4" (6) TRANSITION GLAZING

Thermally Improved
- Series 2100
- Series 2200

NOTE: Part numbers shown are available in 24' (7.3 m) stock lengths. Visit **usalum.com** for more information.

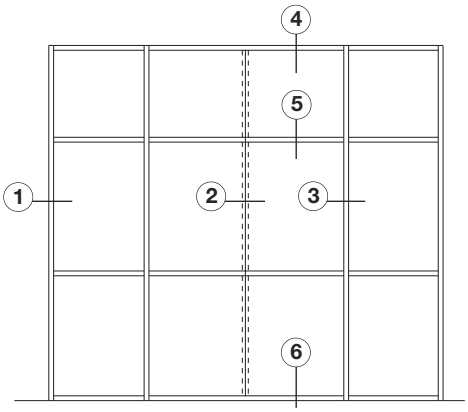

TYPICAL ELEVATION

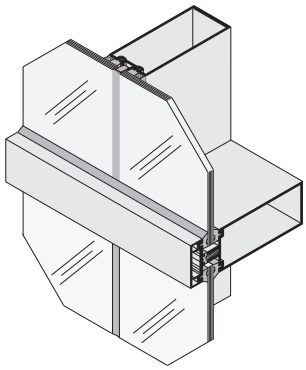

SERIES 2100
Structural Silicone Vertical Glazed Curtain Wall

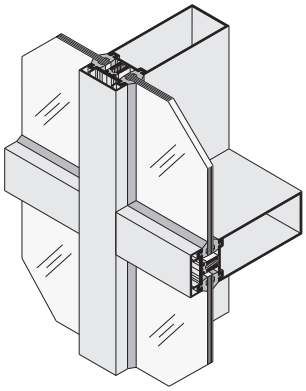

SERIES 2200
Captured Vertical Glazed Curtain Wall

NOTE: 2-7/8" (73) Back Member Shown; 4" (101.6) and 5" (127) Member Similar

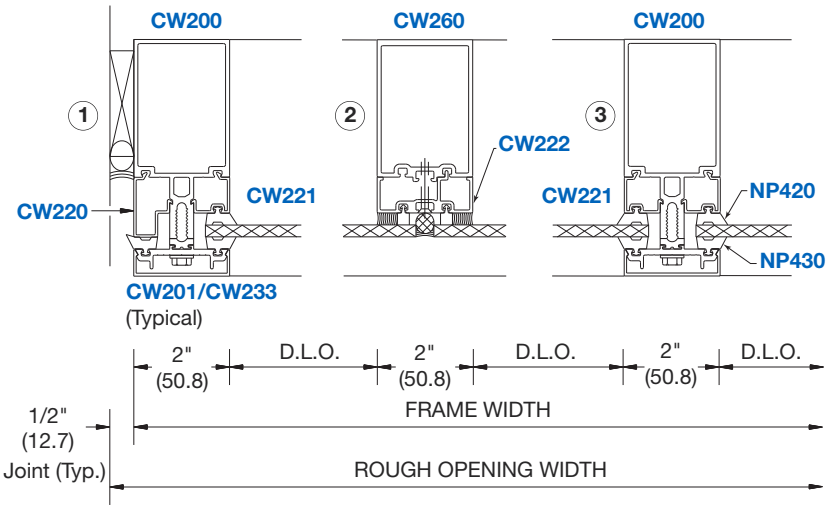

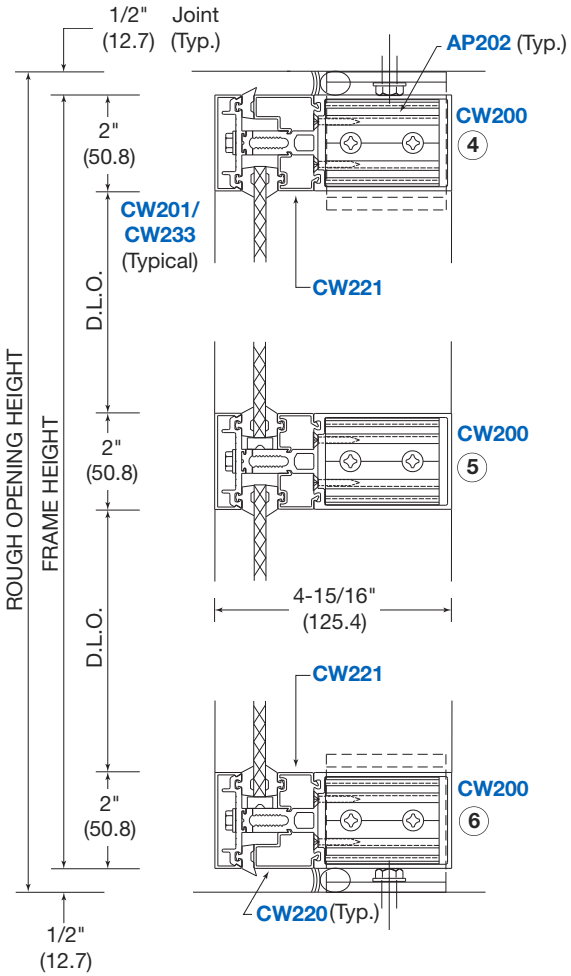

NOT TO SCALE

CURTAIN WALLS

Typical Details

Thermally Improved
- Series 2100
- Series 2200

DOOR FRAMING

Gaskets **NP430** for Exterior and **NP420** for Interior, Typical.

NOTE: Doors are available in stock to accommodate 36" x 84" (914 x 2134) and 72" x 84" (1829 x 2134) door openings. Visit **usalum.com** for more information.

NOTE: 2-7/8" (73) Back Member Shown; 4" (101.6) and 5" (127) Members Shown in Parentheses

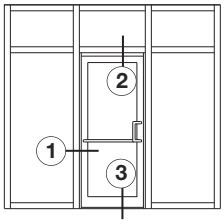

OFFSET HUNG DOOR

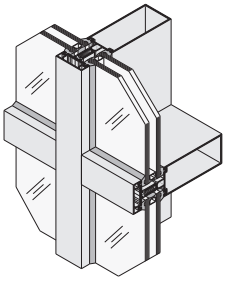

SERIES 2200
Captured Vertical Glazed Curtain Wall

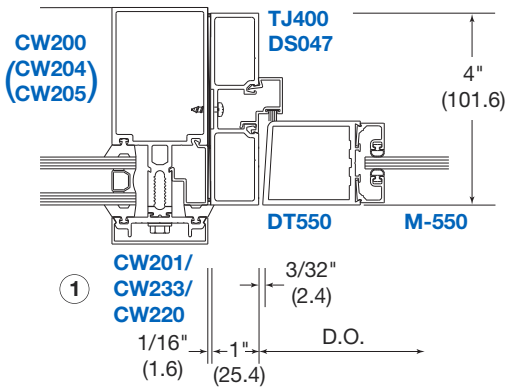

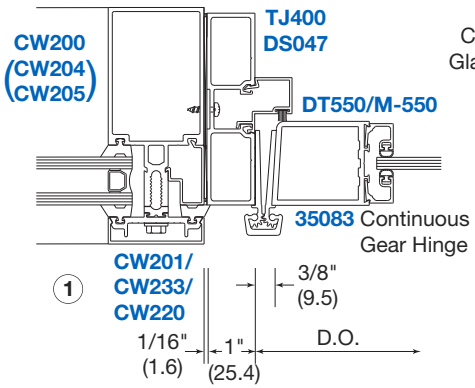

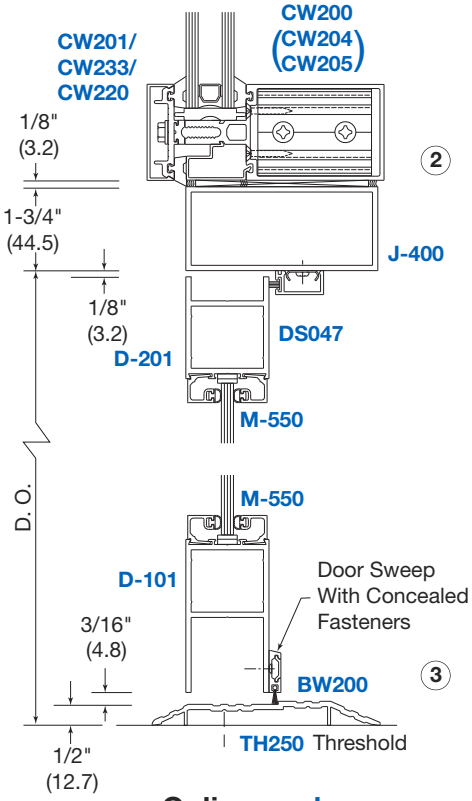

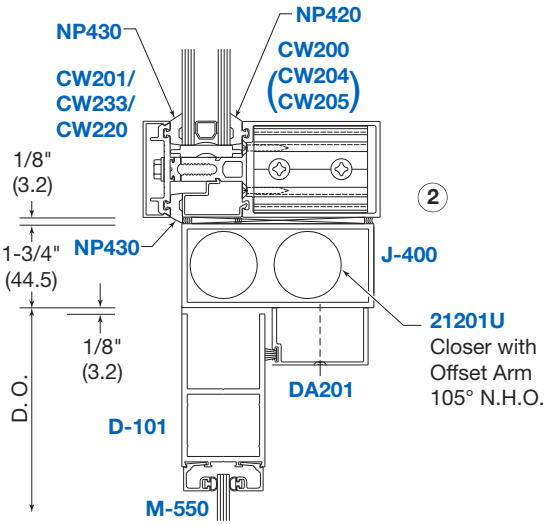

NOT TO SCALE

CURTAIN WALLS

Typical Details

Thermally Improved • Series 2200

DOOR FRAMING WITH FLUSH DOOR ADAPTOR

(For Series 2200 Only)

NOTE: 2-7/8" (73) Back Member Shown; 4" (101.6) and 5" (127) Members Shown in Parentheses

NOTE: Doors are available in stock to accommodate 36" x 84" (914 x 2134) and 72" x 84" (1829 x 2134) door openings. Visit usalum.com for more information.

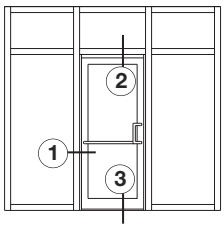

OFFSET HUNG DOOR

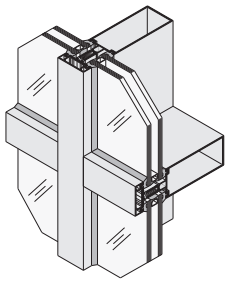

SERIES 2200
Captured Vertical Glazed Curtain Wall

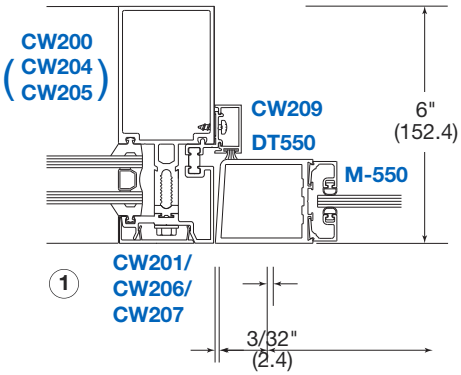

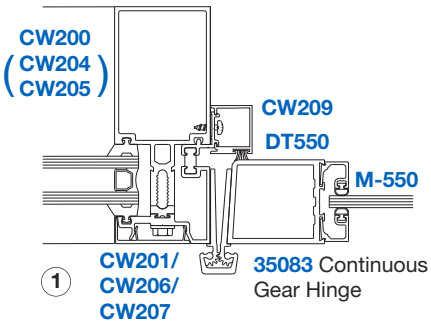

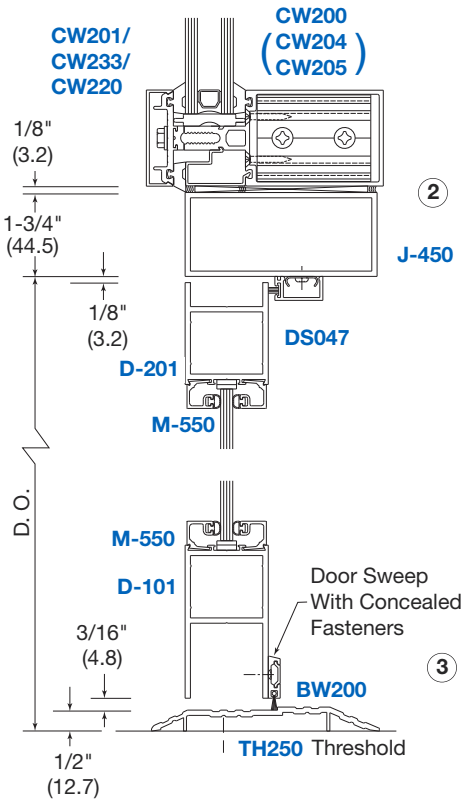

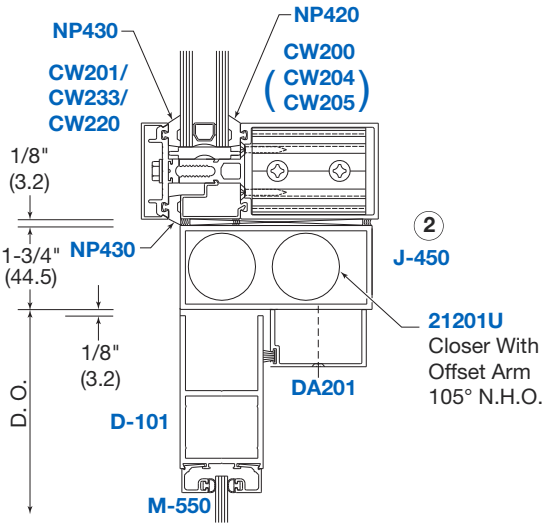

NOT TO SCALE

CURTAIN WALLS

Typical Details

Thermally Improved
- Series 2100
- Series 2200

DOOR FRAMING

NOTE: 2-7/8" (73) Back Member Shown; 4" (101.6) and 5" (127) Members Shown in Parentheses

NOTE: Doors are available in stock to accommodate 36" x 84" (914 x 2134) and 72" x 84" (1829 x 2134) door openings. Visit **usalum.com** for more information.

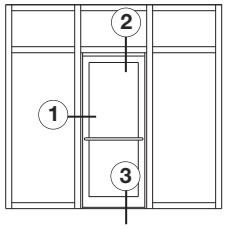

CENTER HUNG DOOR

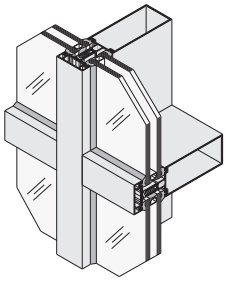

SERIES 2200
Captured Vertical Glazed Curtain Wall

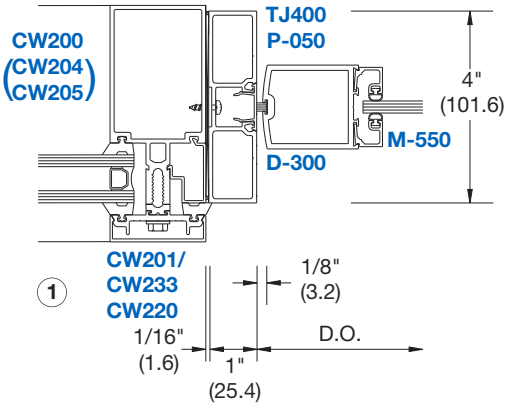

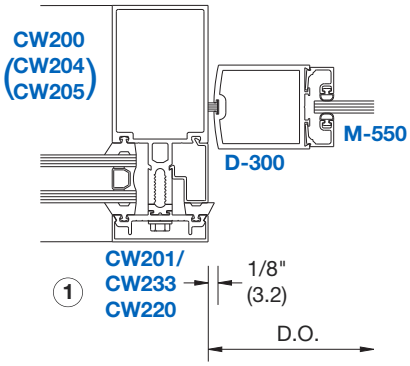

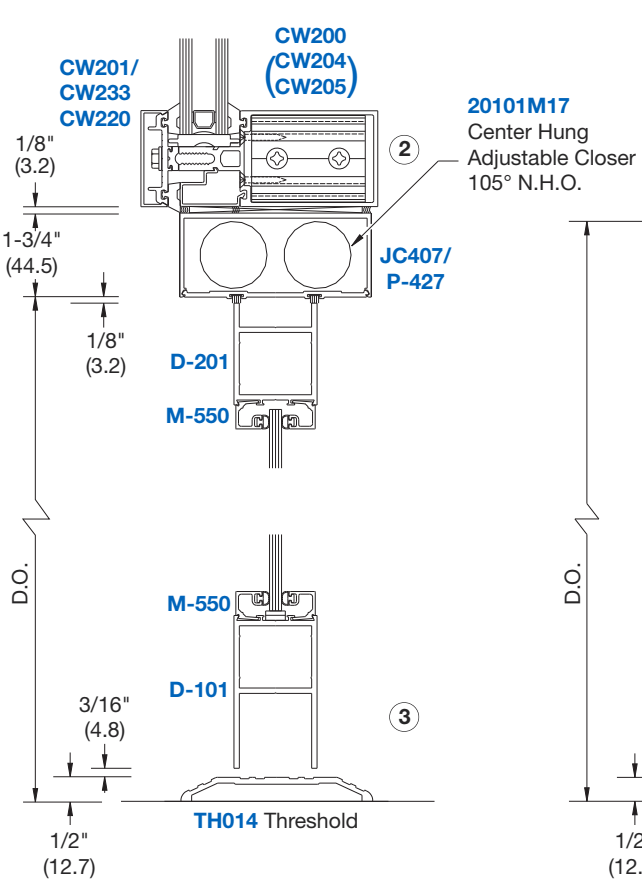

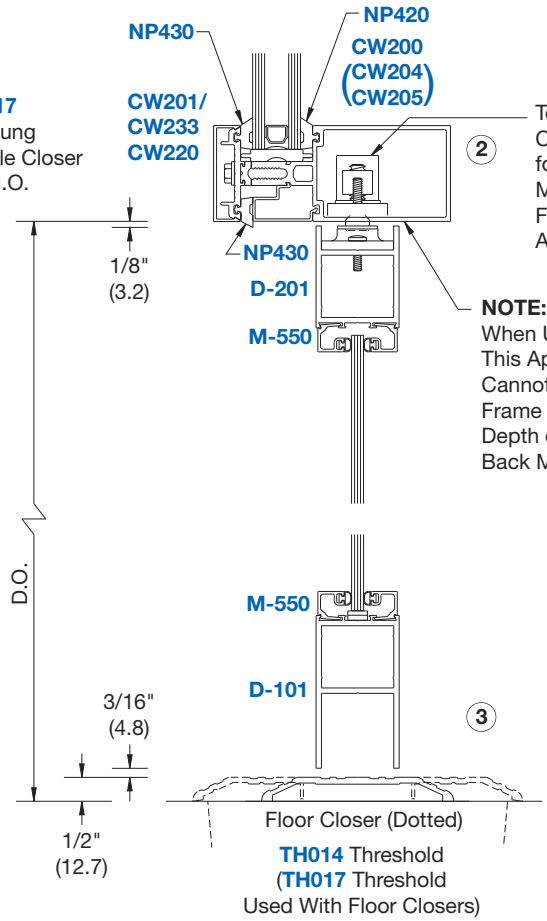

NOT TO SCALE

CURTAIN WALLS

Windload Charts

CAPTURED VERTICAL MULLIONS FOR 1" (25) GLAZING SHEAR BLOCK ASSEMBLY

Thermally Improved
- **Series 2100**
- **Series 2200**

J

Mullions designed for L/175 deflection ratio and for the following allowable working stresses:

> Aluminum alloy 6063-T5: allowable stress for windload 12,929 psi. (89 MPa)
> Steel reinforcing allowable stress for windload 26,666 psi. (89 MPa)

Curves represent the limit values and are based on criteria for simple beam, uniformly loaded, using the distribution of wind forces on the wall with rectangular loading. Glass is not considered as contributing to resistance of deflection.

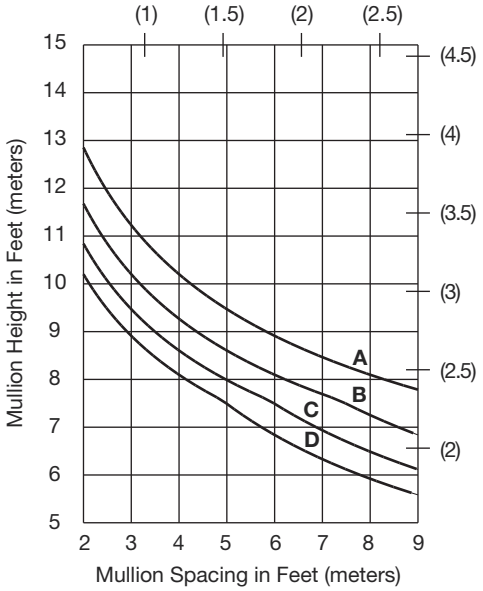

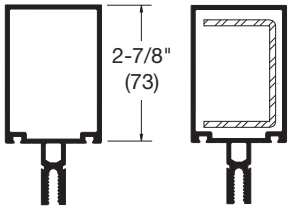

CW200 **CW200** with **SS220**

I = 2.090 (86.992 x 10^4)
S = 0.994 (16.289 x 10^3)
Steel Stiffener
I = 0.530 (22.060 x 10^4)
S = 0.471 (7.718 x 10^3)
IAL + STL = 3.627 (150.967 x 10^4)

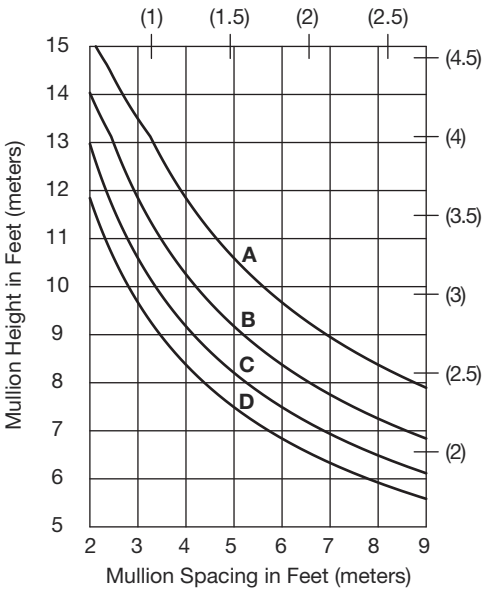

> Limitation of vertical mullions for:
> CURVES **A** = 15 PSF (718 Pa)
> CURVES **B** = 20 PSF (957 Pa)
> CURVES **C** = 25 PSF (1197 Pa)
> CURVES **D** = 30 PSF (1436 Pa)

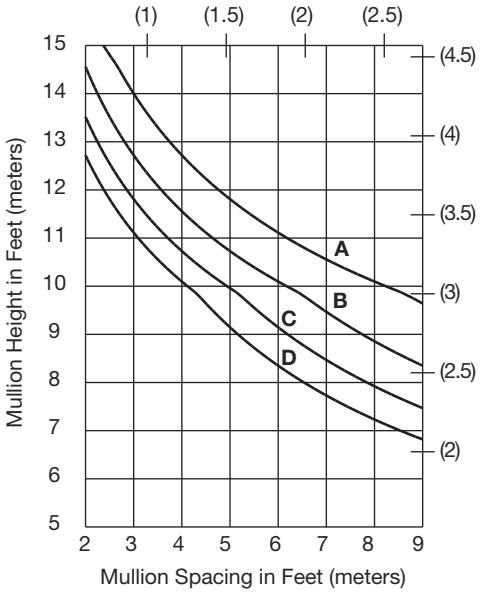

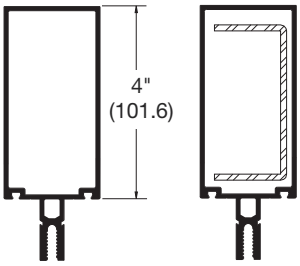

CW204 **CW204** with **SS221**

I = 4.052 (168.657 x 10^4)
S = 1.482 (24.286 x 10^3)
Steel Stiffener
I = 1.498 (62.351 x 10^4)
S = 0.856 (14.027 x 10^3)
IAL + STL = 8.396 (349.468 x 10^4)

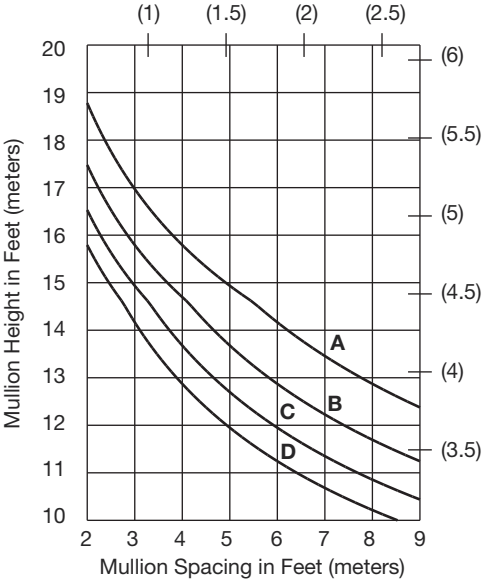

CURTAIN WALLS

Windload Charts

Thermally Improved
- Series 2100
- Series 2200

J

CAPTURED VERTICAL MULLIONS FOR 1" (25) GLAZING SHEAR BLOCK ASSEMBLY

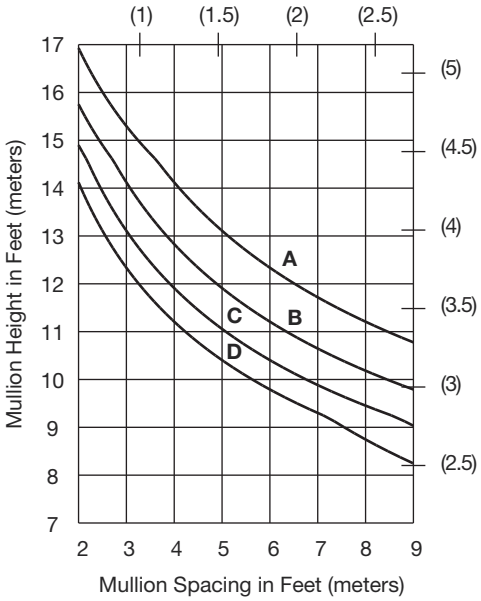

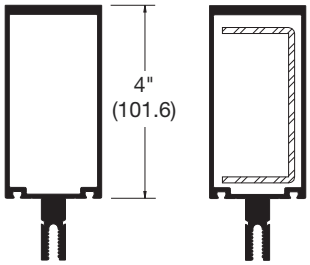

CW234

CW234 with SS221

HEAVY WALL MULLIONS

I = 5.543 (230.717 x 10^4)
S = 2.168 (35.527 x 10^3)
Steel Stiffener
I = 1.498 (62.351 x 10^4)
S = 0.856 (14.027 x 10^3)
IAL + STL = 9.887 (411.535 x 10^4)

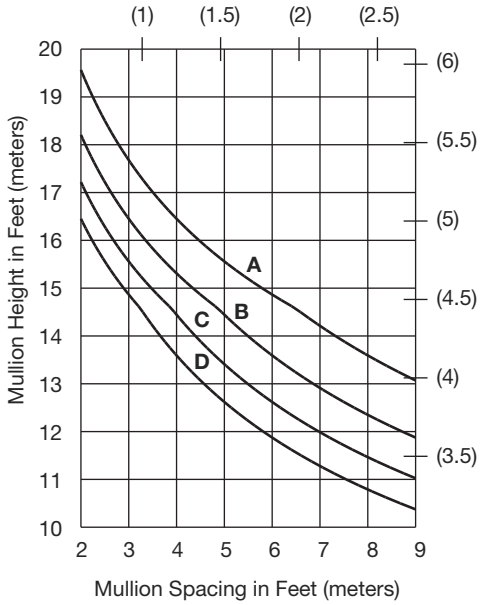

Limitation of vertical mullions for:
CURVES **A** = 15 PSF (718 Pa)
CURVES **B** = 20 PSF (957 Pa)
CURVES **C** = 25 PSF (1197 Pa)
CURVES **D** = 30 PSF (1436 Pa)

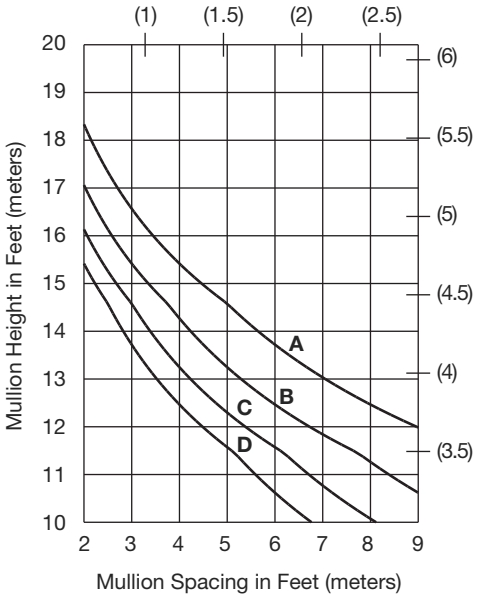

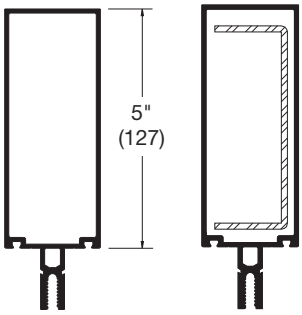

CW205

CW205 with SS222

I = 7.626 (317.418 x 10^4)
S = 2.397 (39.279 x 10^3)
Steel Stiffener
I = 2.643 (110.01 x 10^4)
S = 1.191 (19.517 x 10^3)
IAL + STL = 15.291 (636.447 x 10^4)

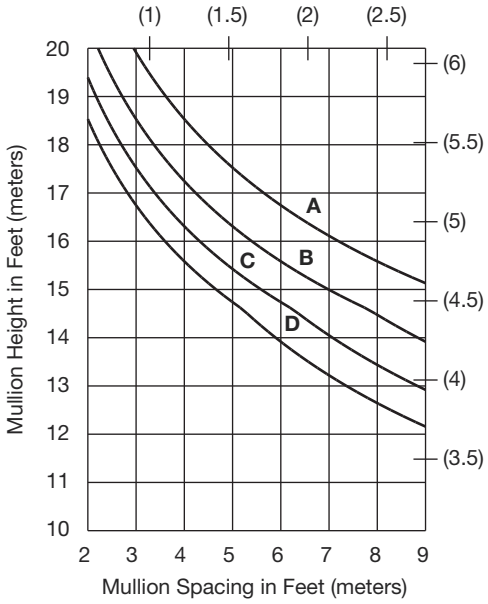

CURTAIN WALLS

Windload Charts

CAPTURED VERTICAL MULLIONS
SCREW SPLINE ASSEMBLY
FOR 1" (25) GLAZING

Thermally Improved
- **Series 2100**
- **Series 2200**

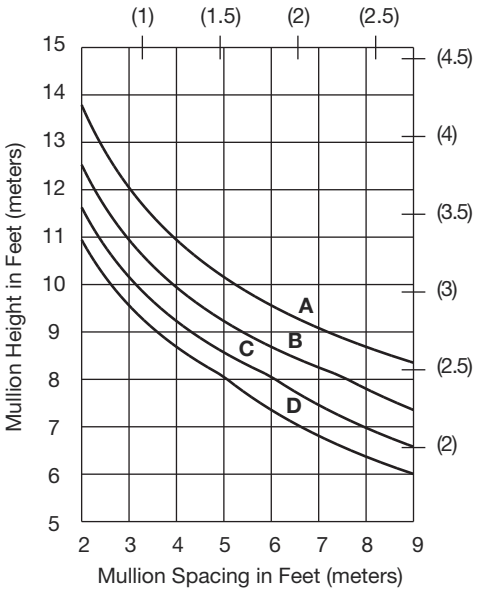

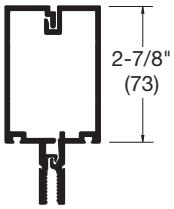

CW230/ CW239

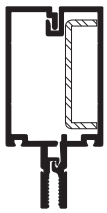

CW230/ CW239 with **SS210**

I = 2.58 (107.387 x 10^4)
S = 1.15 (18.847 x 10^3)
Steel Stiffener
I = 0.328 (13.652 x 10^4)
S = 0.191 (3.129 x 10^3)
IAL + STL = 3.531 (146.971 x 10^4)

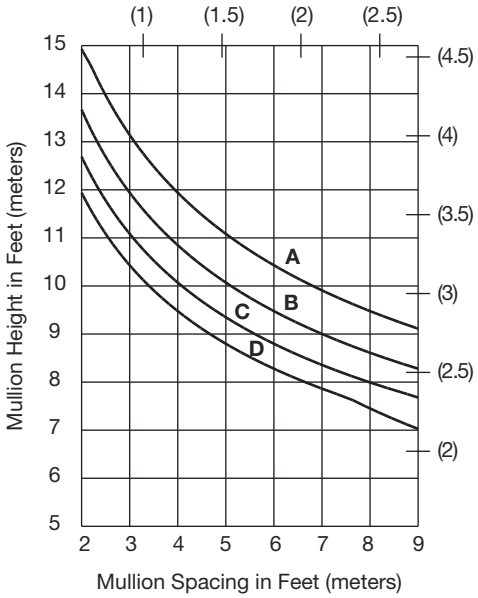

Limitation of vertical mullions for:
CURVES **A** = 15 PSF (718 Pa)
CURVES **B** = 20 PSF (957 Pa)
CURVES **C** = 25 PSF (1197 Pa)
CURVES **D** = 30 PSF (1436 Pa)

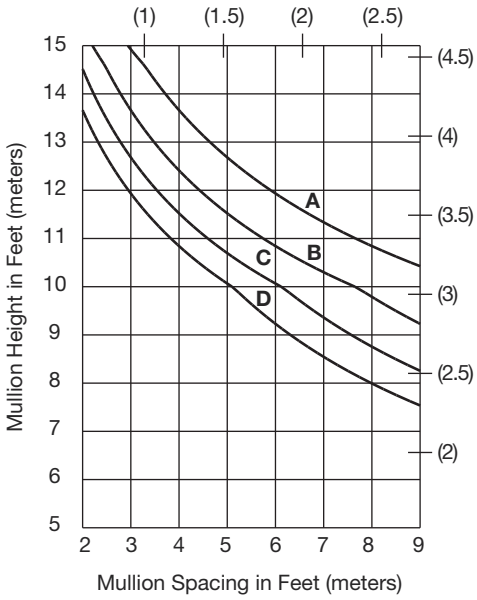

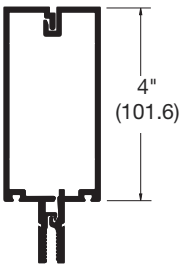

CW240/ CW249

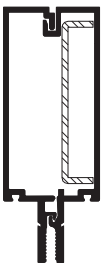

CW240/ CW249 with **SS211**

I = 5.019 (208.907 x 10^4)
S = 1.81 (29.678 x 10^3)
Steel Stiffener
I = 0.873 (36.337 x 10^4)
S = 0.490 (8.029 x 10^3)
IAL + STL = 7.551 (314.284 x 10^4)

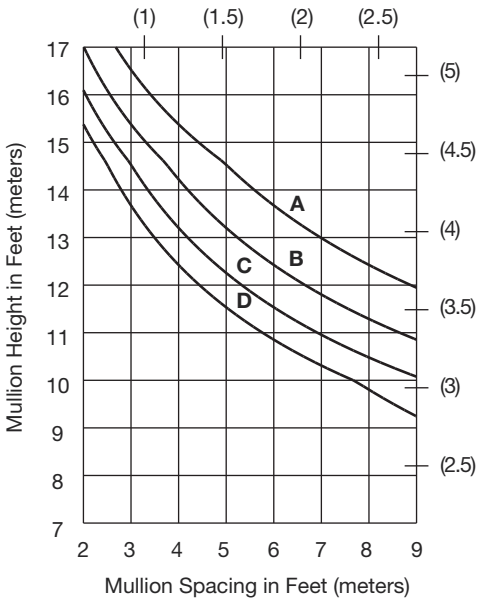

CURTAIN WALLS

Windload Charts

CAPTURED VERTICAL MULLIONS
SCREW SPLINE ASSEMBLY
FOR 1" (25) GLAZING

Thermally Improved
- **Series 2100**
- **Series 2200**

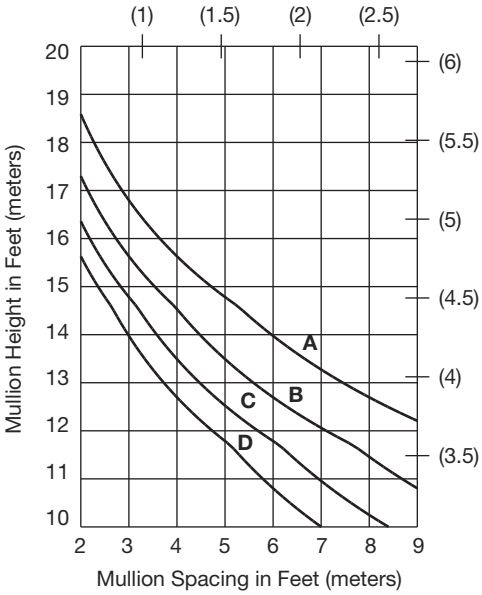

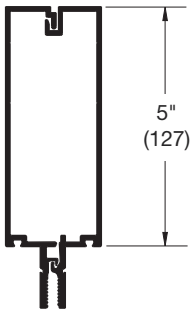

CW250/ CW259

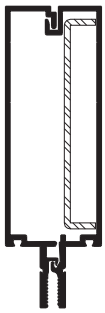

CW250/ CW259 with **SS212**

I = 8.058 (335.399 x 10^4)
S = 2.48 (40.652 x 10^3)
Steel Stiffener
I = 1.676 (69.76 x 10^4)
S = 0.735 (12.044 x 10^3)
$I_{AL + STL}$ = v 12.918 (537.703 x 10^4)

Limitation of vertical mullions for:
CURVES **A** = 15 PSF (718 Pa)
CURVES **B** = 20 PSF (957Pa)
CURVES **C** = 25 PSF (1197 Pa)
CURVES **D** = 30 PSF (1436 Pa)

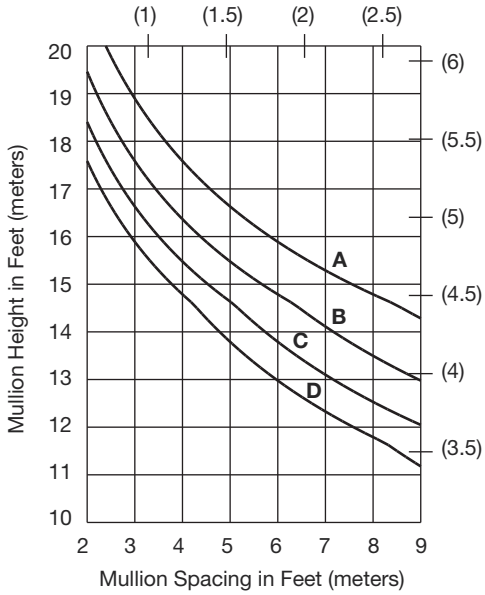

Structural Silicone Chart

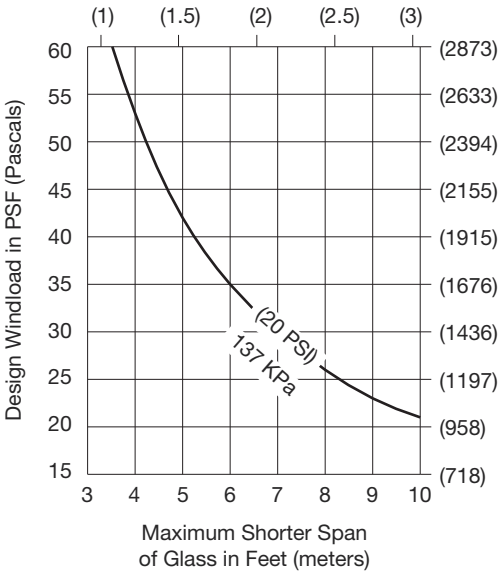

Stress on structural silicone should not exceed 20 PSI (137 KPa) for a 6:1 safety factor.

Series 2100 offers a contact width of 7/16" (11.1).

NOTE: The maximum shorter span of glass may be the width or the height dimension
E.G. for 5' x 7' (1.52 m x 2.13 m) check 5' (1.52 m)
for 7' x 5' (2.13 m x 1.52 m) check 5' (1.52 m)

THESE LIMITATIONS ARE RELATED ONLY TO THE SILICONE JOINT CAPABILITY. ALUMINUM MEMBERS SHOULD ALSO BE CHECKED FOR WINDLOAD AND DEADLOAD.

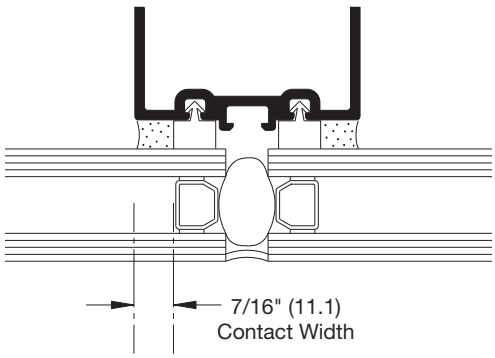

CURTAIN WALLS

Windload Charts

Thermally Improved
- **Series 2100**
- **Series 2200**

J

STRUCTURAL SILICONE GLAZED VERTICAL MULLIONS SHEAR BLOCK ASSEMBLY FOR 1" (25) GLAZING

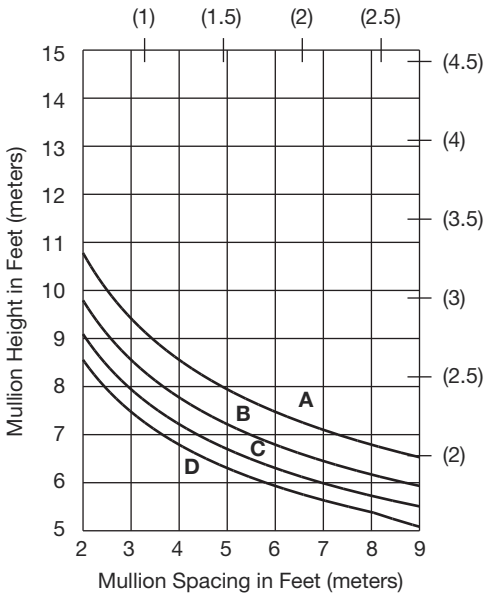

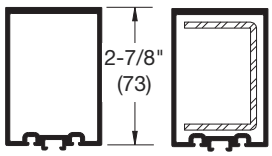

CW260 **CW260** with **SS220**

I = 1.233 (51.321 x 10^4)
S = 0.824 (13.503 x 10^3)
Steel Stiffener
I = 0.530 (22.060 x 10^4)
S = 0.471 (7.718 x 10^3)
$I_{AL + STL}$ = 2.770 (115.296 x 10^4)

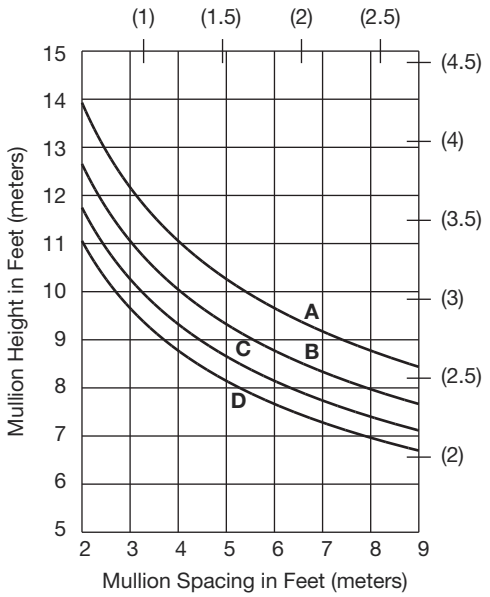

Limitation of vertical mullions for:
CURVES **A** = 15 PSF (718 Pa)
CURVES **B** = 20 PSF (957 Pa)
CURVES **C** = 25 PSF (1197 Pa)
CURVES **D** = 30 PSF (1436 Pa)

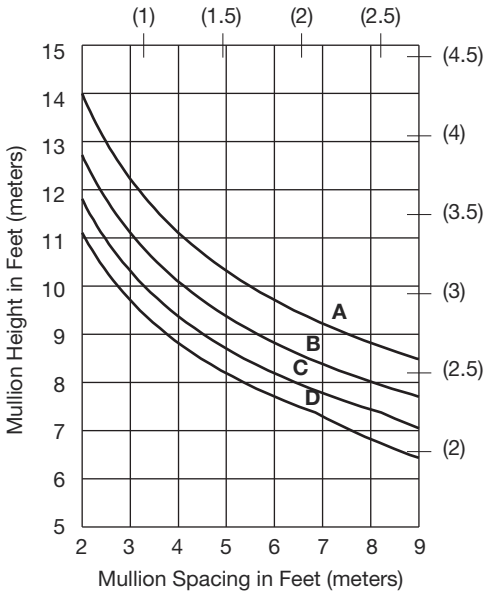

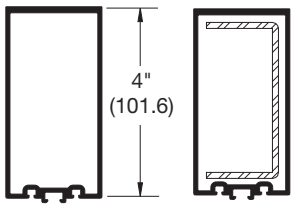

CW264 **CW264** with **SS221**

I = 2.703 (112.507 x 10^4)
S = 1.319 (21.615 x 10^3)
Steel Stiffener
I = 1.498 (62.351 x 10^4)
S = 0.856 (14.027 x 10^3)
$I_{AL + STL}$ = 7.047 (293.325 x 10^4)

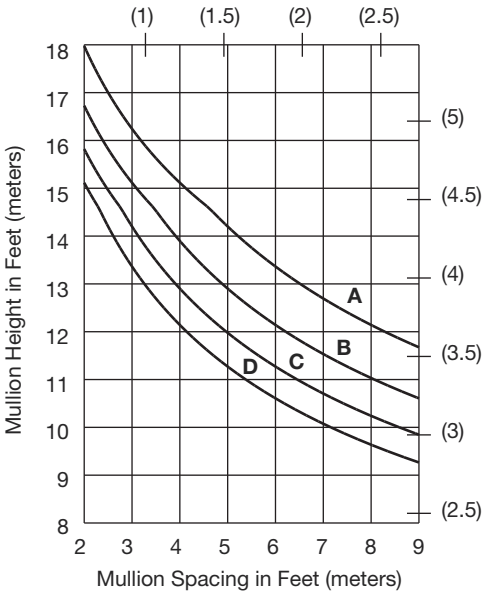

CURTAIN WALLS

Windload Charts

Thermally Improved
- **Series 2100**
- **Series 2200**

STRUCTURAL SILICONE GLAZED VERTICAL MULLIONS SHEAR BLOCK ASSEMBLY FOR 1" (25) GLAZING

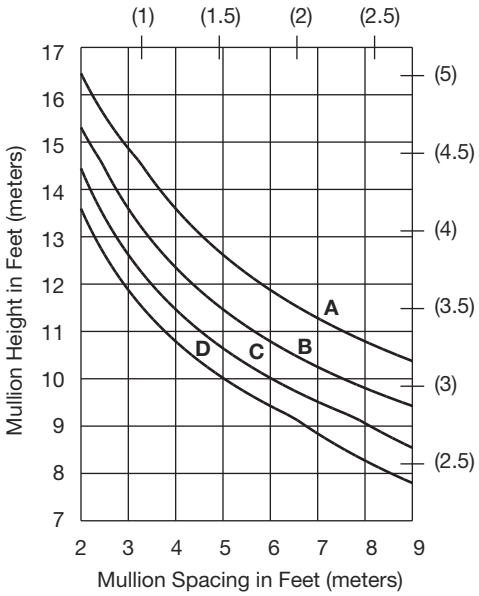

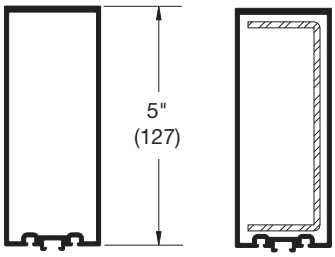

CW265

CW265 with **SS222**

I = 4.946 (205.868 x 10^4)
S = 1.939 (31.775 x 10^3)
Steel Stiffener
I = 2.643 (110.01 x 10^4)
S = 1.191 (19.517 x 10^3)
$I_{AL + STL}$ = 12.611 (524.897 x 10^4)

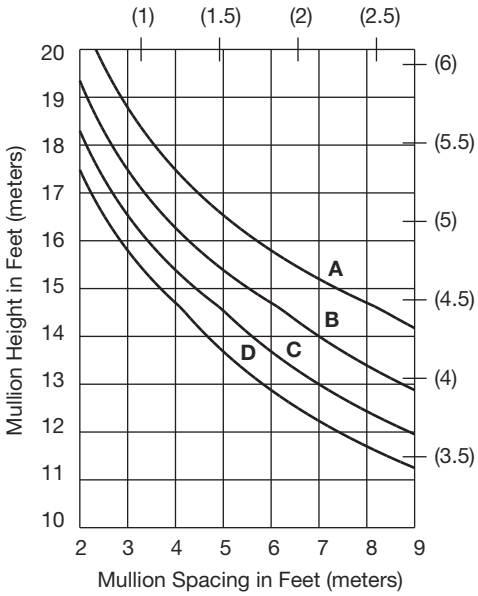

Limitation of vertical mullions for:
CURVES **A** = 15 PSF (718 Pa)
CURVES **B** = 20 PSF (957 Pa)
CURVES **C** = 25 PSF (1197 Pa)
CURVES **D** = 30 PSF (1436 Pa)

SCREW SPLINE ASSEMBLY

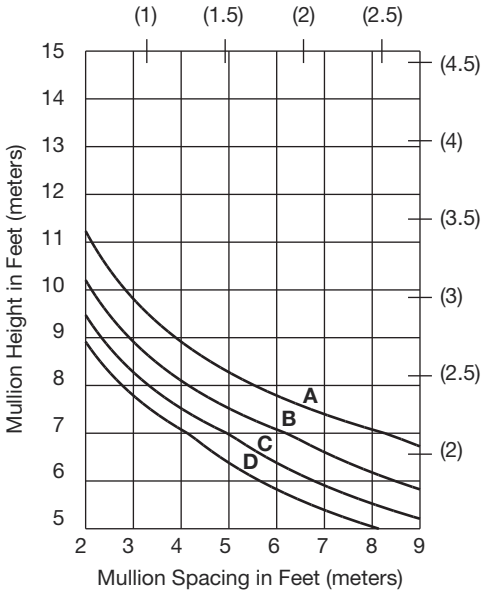

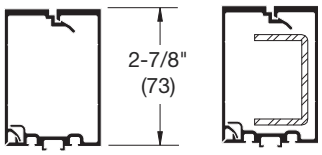

CW231/ CW238

CW231/ CW238 with **SS213**

I = 1.395 (58.064 x 10^4)
S = 0.722 (11.827 x 10^3)
Steel Stiffener
I = 0.331 (13.777 x 10^4)
S = 0.331 (5.424 x 10^3)
$I_{AL + STL}$ = 2.355 (98.017 x 10^4)

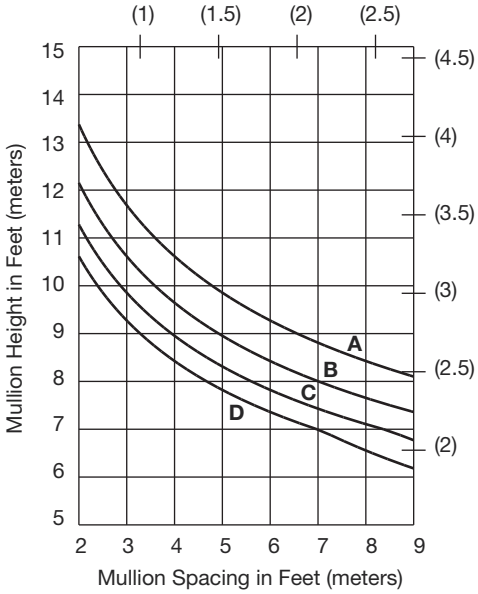

CURTAIN WALLS

Windload Charts

Thermally Improved
- **Series 2100**
- **Series 2200**

STRUCTURAL SILICONE GLAZED VERTICAL MULLIONS SCREW SPLINE ASSEMBLY FOR 1" (25) GLAZING

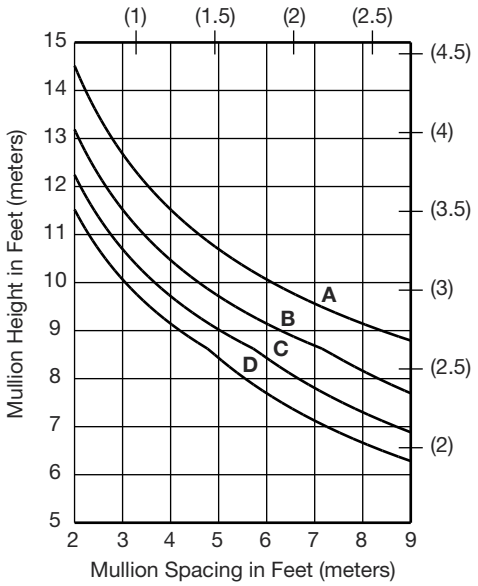

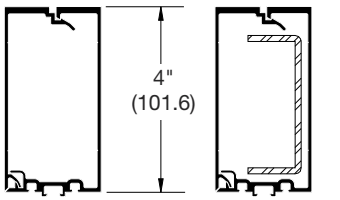

CW241/ CW248

CW241/ CW248 with **SS214**

I = 3.011 (125.327 x 104)
S = 1.259 (20.628 x 103)
Steel Stiffener
I = 0.872 (36.295 x 104)
S = 0.581 (9.521 x 103)

I_{AL+STL} = 5.539 (230.582 x 104)

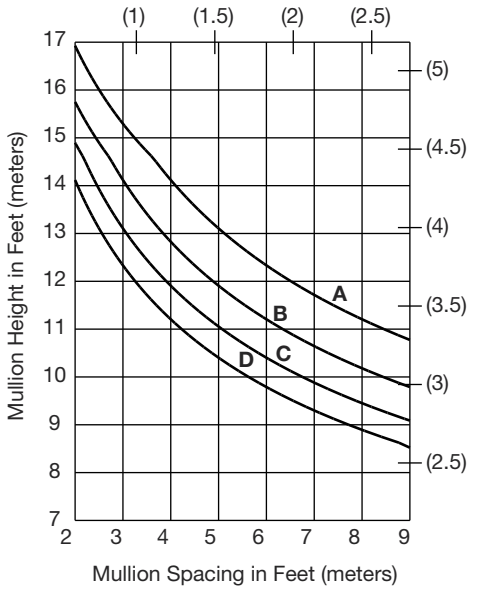

Limitation of vertical mullions for:
CURVES **A** = 15 PSF (718 Pa)
CURVES **B** = 20 PSF (957 Pa)
CURVES **C** = 25 PSF (1197 Pa)
CURVES **D** = 30 PSF (1436 Pa)

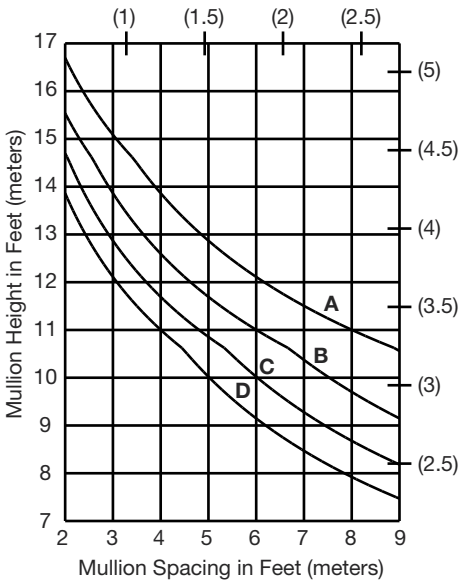

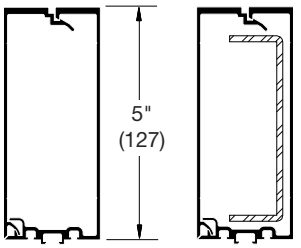

CW251/ CW258

CW251/ CW258 with **SS215**

I = 5.245 (218.313 x 104)
S = 1.779 (29.146 x 103)
Steel Stiffener
I = 1.754 (73.007 x 104)
S = 0.877 (14.371 x 103)

I_{AL+STL} = 10.331 (430.033 x 104)

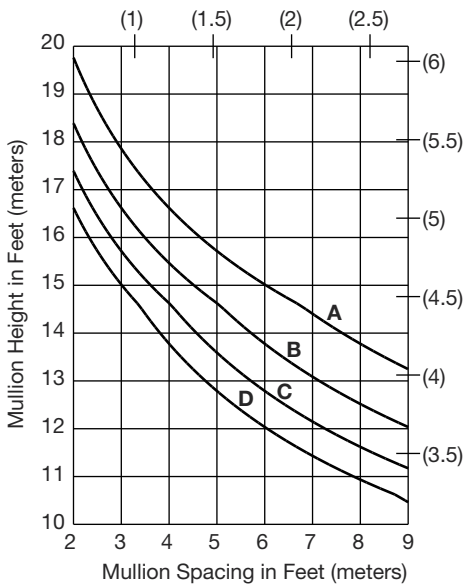

CURTAIN WALLS

Deadload Charts

HORIZONTAL MULLIONS SHEAR BLOCK ASSEMBLY FOR 1" (25) GLAZING

Thermally Improved
- Series 2100
- Series 2200

Deadload charts are based on 1/8" (3.2) maximum deflection at the center point of the horizontal member and on a glass weight of 6.5 psf (31.74 Kg/m^2).
Glass shall rest on two setting blocks located at:
CURVES **A:** 1/4 points
CURVES **B:** 1/8 points or 8" (203.2) from corners, whichever is larger.

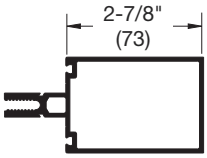

CW200
I_{yy} = 0.575 (23.933 x 10^4)

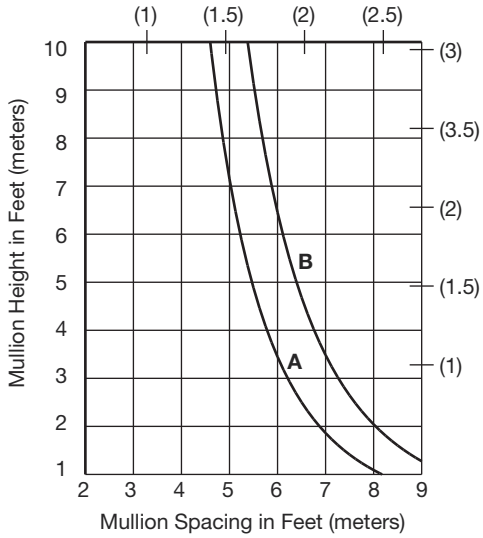

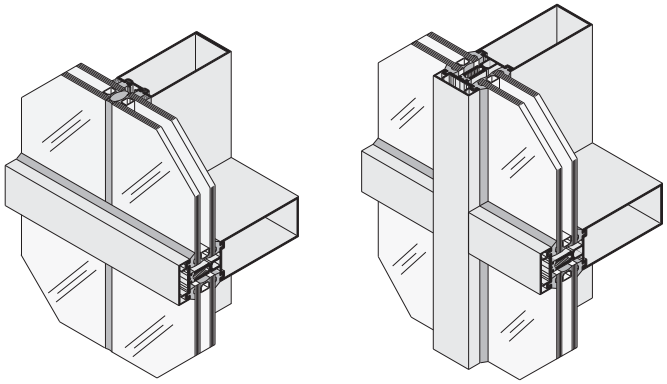

SERIES 2100
Structural Silicone Vertical Glazed Curtain Wall

SERIES 2200
Captured Vertical Glazed Curtain Wall

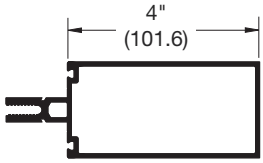

CW204
I_{yy} = 0.751 (31.259 x 10^4)

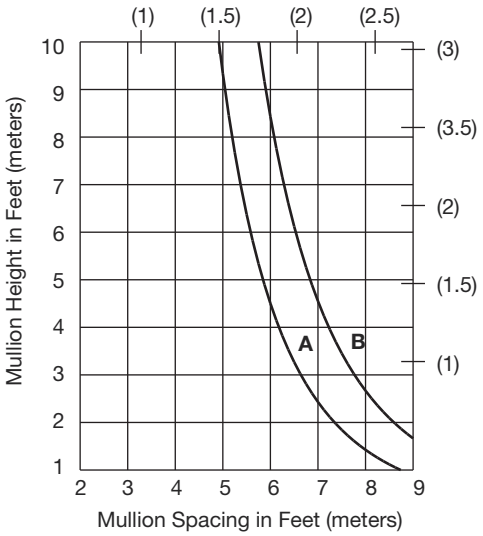

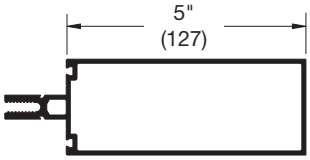

CW205
0.998 I_{yy} = (41.539 x 10^4)

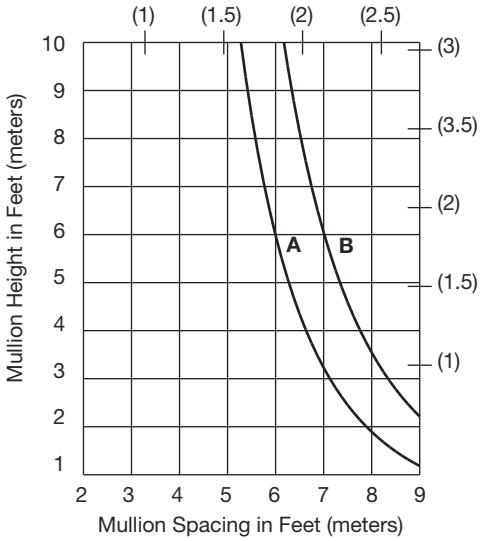

CURTAIN WALLS

Deadload Charts

HORIZONTAL MULLIONS SCREW SPLINE ASSEMBLY FOR 1" (25) GLAZING

Thermally Improved
- Series 2100
- Series 2200

Deadload charts are based on 1/8" (3.2) maximum deflection at the center point of the horizontal member and on a glass weight of 6.5 psf (31.74 Kg/m²).
Glass shall rest on two setting blocks located at:
CURVES **A:** 1/4 points
CURVES **B:** 1/8 points or 8" (203.2) from corners, whichever is larger.

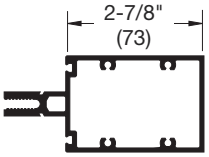

CW210

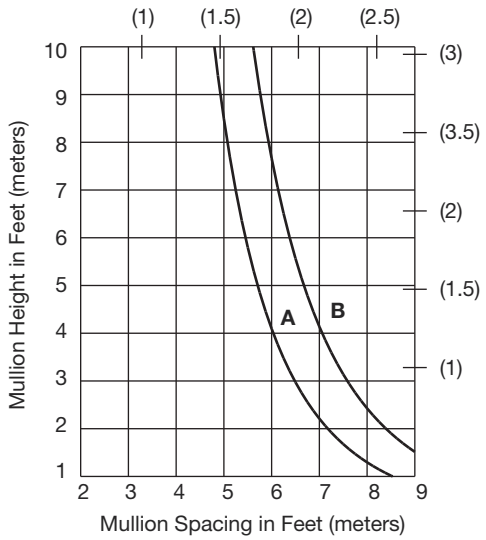

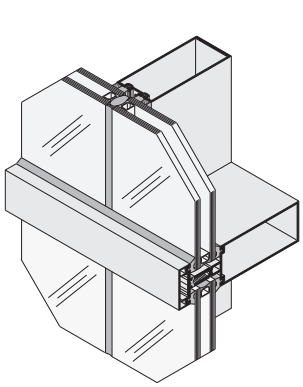

SERIES 2100
Structural Silicone Vertical Glazed Curtain Wall

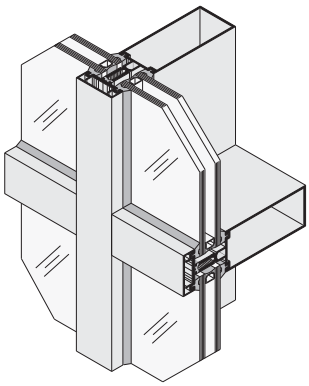

SERIES 2200
Captured Vertical Glazed Curtain Wall

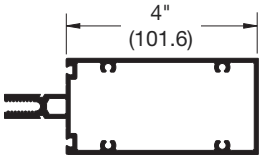

CW214

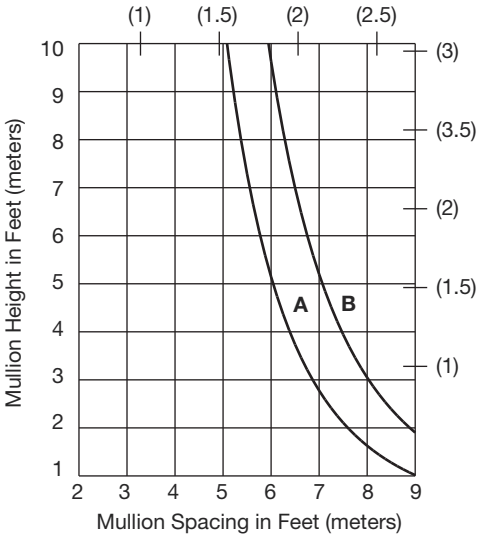

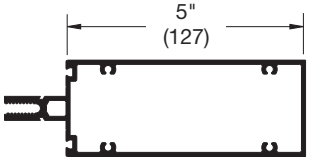

CW215

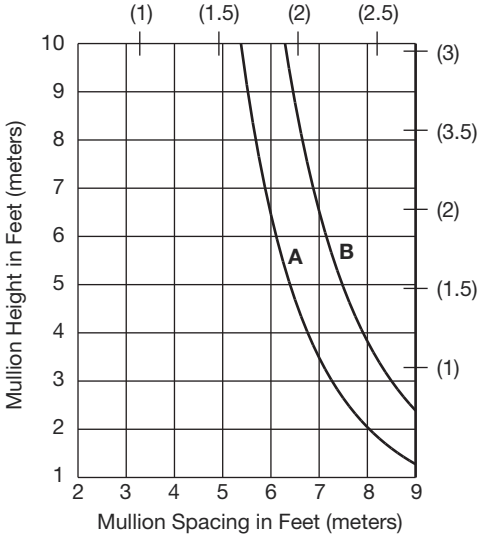

CRL U.S. ALUMINUM

CURTAIN WALLS

Accessories

Thermally Improved
- Series 2100
- Series 2200

FOR 1/4" (6) AND 1" (25) GLAZING

PART NO.	DETAIL	DESCRIPTION	PKG. QTY.	FOR MULLION DEPTHS		
				2-7/8" (73)	4" (101.6)	5" (127)
AP311	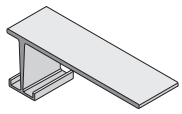	Wall Jamb Anchor at Head and Sill for CW200	6	●		
AP315	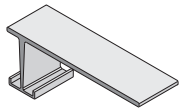	Wall Jamb Anchor at Head and Sill for CW260	6	●		
AP312	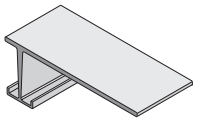	Wall Jamb Anchor at Head and Sill for CW204	6		●	
AP314	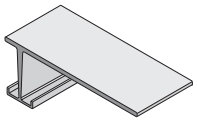	Wall Jamb Anchor at Head and Sill for CW234	6		●	
AP316	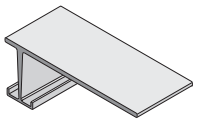	Wall Jamb Anchor at Head and Sill for CW264	6		●	
AP313	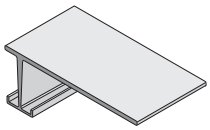	Wall Jamb Anchor at Head and Sill for CW205	6			●
AP317	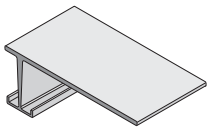	Wall Jamb Anchor at Head and Sill for CW265	6			●
AP240	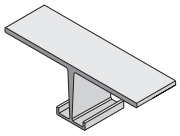	Intermediate Vertical Anchor at Head and Sill for CW200	12	●		
AP260	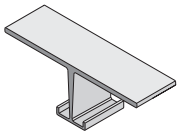	Intermediate Vertical Anchor at Head and Sill for CW260	12	●		
AP244	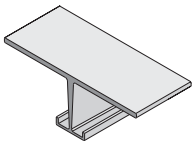	Intermediate Vertical Anchor at Head and Sill for CW204	12		●	

CURTAIN WALLS

Accessories

FOR 1/4" (6) AND 1" (25) GLAZING

Thermally Improved
- Series 2100
- Series 2200

PART NO.	DETAIL	DESCRIPTION	PKG. QTY.	FOR MULLION DEPTHS		
				2-7/8" (73)	4" (101.6)	5" (127)
AP255	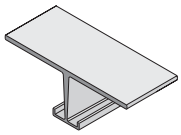	Intermediate Vertical Anchor at Head and Sill for CW234	12		●	
AP264	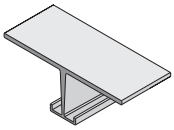	Intermediate Vertical Anchor at Head and Sill for CW264	12		●	
AP245	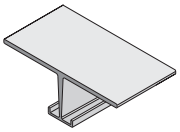	Intermediate Vertical Anchor at Head and Sill for CW205	12			●
AP265	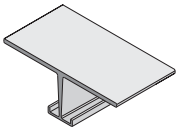	Intermediate Vertical Anchor at Head and Sill for CW265	12			●
SL284	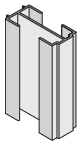	Mullion Splice Sleeve for 4" (101.6) Mullions	12		●	
SL285	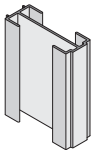	Mullion Splice Sleeve for 5" (127) Mullions	12			●
NP430		Exterior Gasket	250' Roll	●	●	●
NP420		Interior Gasket	250' Roll	●	●	●
SP250		Spacer Gasket for Butt Glaze	250' Roll	●	●	●
RG635	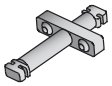	Temporary Glass Retainer for Butt Glaze. Patent No. D295,952	50	●	●	●
SB240	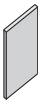	Edge Block 1-1/4" x 4" (31.8 x 101.6)	100	●	●	●

CRL U.S. ALUMINUM

CURTAIN WALLS

Accessories

FOR 1/4" (6) AND 1" (25) GLAZING

Thermally Improved
- Series 2100
- Series 2200

PART NO.	DETAIL	DESCRIPTION	PKG. QTY.	FOR MULLION DEPTHS		
				2-7/8" (73)	4" (101.6)	5" (127)
AP202		Shear Block for 2-7/8" (73) Mullions (Includes screws)	20	●		
AP204	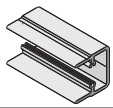	Shear Block for 4" (101.6) Mullions (Includes screws)	20		●	
AP205	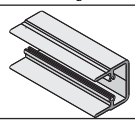	Shear Block for 5" (127) Mullions (Includes screws)	20			●
AP287	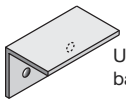 Use for last bay horizontals	Shear Clip for 2-7/8" (73) Mullions (Includes Screws)	20	●		
AP404	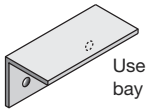 Use for last bay horizontals	Shear Clip for 4" (101.6) Mullions (Includes Screws)	20		●	
AP517	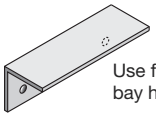 Use for last bay horizontals	Shear Clip for 5" (127) Mullions (Includes Screws)	20			●
HD475		End Dam for Captured Mullions	50	●	●	●
WD220	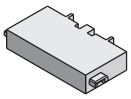	End Dam for Butt Glaze Mullions	50	●	●	●
CP220	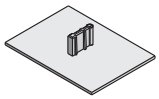	Closure Plate for Captured Mullions	20	●	●	●
CP271	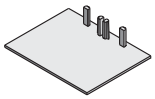	Closure Plate for Butt Glaze Mullions	20	●	●	●
CW368	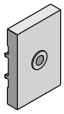	Temporary Glass Retainer for Captured Mullions	50	●	●	●
MS222		Screw for Pressure Bar 1/4"-20 x 1" (25) HWHCS with SRG5	200	●	●	●
ST251		Screw for Screw Spline Assembly #10 x 1" (25) HWH SMS	200	●	●	●

CURTAIN WALLS

Accessories

FOR 1/4" (6) AND 1" (25) GLAZING

Thermally Improved
- Series 2100
- Series 2200

PART NO.	DETAIL	DESCRIPTION	PKG. QTY.	FOR MULLION DEPTHS		
				2-7/8" (73)	4" (101.6)	5" (127)
SB220	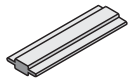	Setting Block for 1/4" (6) Glass; 4" (101.6) Long	100	●	●	●
SB221	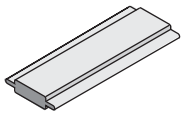	Setting Block for 1" (25) Glass; 4" (101.6) Long	100	●	●	●
DJ020	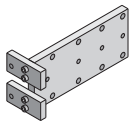	Drill Jig for Captured Vertical Mullions	1	●	●	●
DJ021	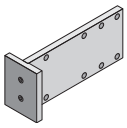	Drill Jig for Structural Glaze Vertical Mullions	1	●	●	●
SS210	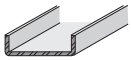	Steel Stiffener Fits in: CW230, CW239	16' (4.88 m) Stock Length	●		
SS211	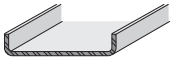	Steel Stiffener Fits in: CW240, CW249	16' (4.88 m) Stock Length		●	
SS212		Steel Stiffener Fits in: CW250, CW259	16' (4.88 m) Stock Length			●
SS213	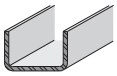	Steel Stiffener Fits in: CW231, CW238	16' (4.88 m) Stock Length	●		
SS214	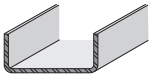	Steel Stiffener Fits in: CW241, CW248	16' (4.88 m) Stock Length		●	
SS215	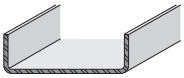	Steel Stiffener Fits in: CW251, CW258	16' (4.88 m) Stock Length			●
SS220	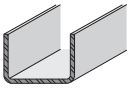	Steel Stiffener Fits in: CW200, CW260	16' (4.88 m) Stock Length	●		
SS221	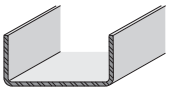	Steel Stiffener Fits in: CW204, CW234, and CW264	16' (4.88 m) Stock Length		●	
SS222	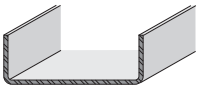	Steel Stiffener Fits in: CW205, CW265	16' (4.88 m) Stock Length			●

CURTAIN WALLS

Table of Contents

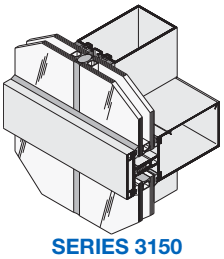

SERIES 3150
Structural Silicone Vertical
Glazed Curtain Wall

Thermally Improved
• Series 3150

SECTION J2

PAGE

SPECIFICATIONS .....02-J2 and 03-J2
TECHNICAL DATA 04-J2
SPECIAL FEATURES 05-J2
TYPICAL DETAILS FOR 1/4" (6) GLAZING.....06-J2 thru 11-J2
TYPICAL DETAILS FOR 1" (25) GLAZING .....12-J2 thru 20-J2
WINDLOAD AND STRUCTURAL SILICONE CHARTS .....21-J2 and 22-J2
DEADLOAD CHARTS .....23-J2 and 24-J2
ACCESSORIES.....25-J2 thru 28-J2

Project: The Hope Center, Tupelo, MS

Due to the diversity in state/provincial, local, and federal laws and codes that govern the design and application of architectural products, it is the responsibility of the individual architect, owner, and installer to ensure that products selected for use on projects comply with all applicable building codes and laws. U.S. Aluminum exercises no control over the use or application of its products, glazing materials, and operating hardware, and assumes no responsibility thereof.

The rapidly changing technology within the architectural aluminum products industry demands that U.S. Aluminum reserve the right to revise, discontinue or change any product line, specification or electronic media without prior written notice.

NOTE: Dimensions in parentheses ( ) are millimeters unless otherwise noted.
Other metric units shown in this publication are:

m - meter	Kg - kilogram
Pa - pascal	KPa - kilopascal
MPa - megapascal	

CURTAIN WALLS

Specifications

Thermally Improved • Series 3150

SECTION 08 44 13 ALUMINUM CURTAIN WALL SYSTEMS

SERIES	FACE WIDTH	BACK MEMBER DEPTH	OVERALL DEPTH	GLAZING INFILL	GLAZING METHOD
3150	2-1/2" (63.5)	4" (101.6) 5" (127) 8" (203.2)	5-1/4" (133.4) 6-1/4" (158.8) 9-1/4" (235)	1/4" (6)	Exterior
		4" (101.6) 5" (127) 8" (203.2)	6" (152.4) 7" (177.8) 10" (254)	1" (25)	

I. GENERAL DESCRIPTION

Work Included: Furnish all necessary materials, labor, and equipment for the complete installation of aluminum framing as shown on the drawings and specified herein. (Specifier Note: It is suggested that related items such as aluminum entrance doors, glass, and sealants be included whenever possible.)
Work Not Included: Structural support of the framing system, interior closures, trim. (Specifier list other exclusions).
Related Work Specified Elsewhere: (Specifier list).

QUALITY ASSURANCE

Drawings and specifications are based on the Series 3150 Curtain Wall System as manufactured by U.S. Aluminum. Whenever substitute products are to be considered, supporting technical literature, samples, drawings, and performance data must be submitted 10 days prior to bid in order to make a valid comparison of the products involved. Test reports certified by an independent test laboratory must be made available upon request.

PERFORMANCE REQUIREMENTS

Air Infiltration: shall be tested in accordance with ASTM E 283. Infiltration shall not exceed .06 CFM per square foot (.0003m3/sm2) fixed area when tested at 6.24 psf (300 Pa).
Water Infiltration: shall be tested in accordance with ASTM E 331.
No water penetration at test pressure of 15 psf (718 Pa).
Structural Performance: shall be tested in accordance with ASTM E 330 and based on:

- Maximum deflection of L/175 of the span
- Allowable stress with a safety factor of 1.65

The system shall perform to this criteria under a windload of *(Specify)* psf. Stress on structural silicone should not exceed 20 psi (138 KPa.). System shall exceed maximum seismic lateral displacement requirements specified in section 1628.8.2 of the Uniform Building Code, 1994 edition. Upon successful completion of the Phase I seismic testing, the curtain wall shall once again be subjected to and must successfully pass the air and water infiltration tests specified above before proceeding to Phase II testing.
Testing Procedures: ASTM 283, E 331, and E 330 - Laboratory performance testing. AAMA 503-08 - Newly installed curtain walls. AAMA 511-08 - Installed curtain walls after six months.
Thermal Performance: Series 3150 shall be tested in accordance with AAMA 1503, and NFRC-100.

II. PRODUCTS MATERIALS

Extrusions shall be 6063-T5 alloy and temper (ASTM B221 alloy T5 temper). Fasteners, where exposed, shall be aluminum, stainless steel or zinc plated steel in accordance with ASTM A 164. Perimeter anchors shall be aluminum or steel, providing the steel is properly isolated from the aluminum. System shall provide conventional glass support at horizontal and perimeter members and structural silicone support at intermediate verticals. Horizontal members and jamb configurations shall allow for pockets to receive E.P.D.M. elastomeric extruded glazing gaskets. Interior vertical glass spacers shall be extruded silicone compatible E.P.D.M. All materials that come in contact with the silicone should be tested for compatibility. Samples of aluminum vertical mullions should be submitted to the silicone manufacturer for adhesion evaluation.

FINISH

All exposed framing surfaces shall be free of scratches and other serious blemishes. Aluminum extrusions shall be given a caustic etch followed by an anodic oxide treatment to obtain...
(Specify one of the following):
_____#11 Clear anodic coating
_____#22 Dark Bronze anodic coating
_____#33 Black anodic coating
A Fluoropolymer paint coating conforming with the requirements of AAMA 2605. Color shall be *(Specify a U.S. Aluminum standard color).*

FABRICATION

System shall provide conventional glass support at horizontal and perimeter members and structural silicone support at intermediate verticals. Horizontal members and jambs shall have extruded pressure plates with flexible (PVC) thermal break material.
Provisions shall be made at all sealed horizontals to weep moisture accumulations to the exterior. A cover shall be snapped over pressure plate to show only a sharp uninterrupted exterior profile.
System shall accommodate 1/4" (6) or 1" (25) glazing infills and provide for transition from 1" (25) to 1/4" (6) with glass remaining in same exterior plane. Framing system shall provide a flush glazing appearance with no intermediate verticals visible from the outside.

CURTAIN WALLS

Specifications

Thermally Improved • Series 3150

SECTION 08 44 13 ALUMINUM CURTAIN WALL SYSTEMS

Horizontal and jamb framing members shall have a nominal width of 2-1/2" (63.5). Overall depth of system shall be (Specify). System shall provide for two piece horizontal framing so that all fasteners at intersection of horizontal and vertical members will be concealed. There shall be no exposed fasteners at perimeter sections.

III. EXECUTION INSTALLATION

All glass framing shall be set in correct locations as shown in the details; and shall be level, square, plumb, and in alignment with other work in accordance with the manufacturer's installation instructions and approved shop drawings. Glass shall be set from outside. Structural silicone shall be applied from inside and silicone weatherseal from outside (after structural silicone has fully cured). Reusable twist-in temporary glass retainers shall be used during structural curing period. Structural silicone must be applied in strict accordance with the silicone manufacturer's instruction for surface preparation, priming, application and curing time. All joints between framing and the building structure shall be sealed in order to secure a watertight installation.

PROTECTION AND CLEANING

After installation the General Contractor shall adequately protect exposed portions of aluminum surfaces from damage by grinding and polishing compounds, plaster, lime, acid, cement, or other contaminants. The General Contractor shall be responsible for final cleaning.

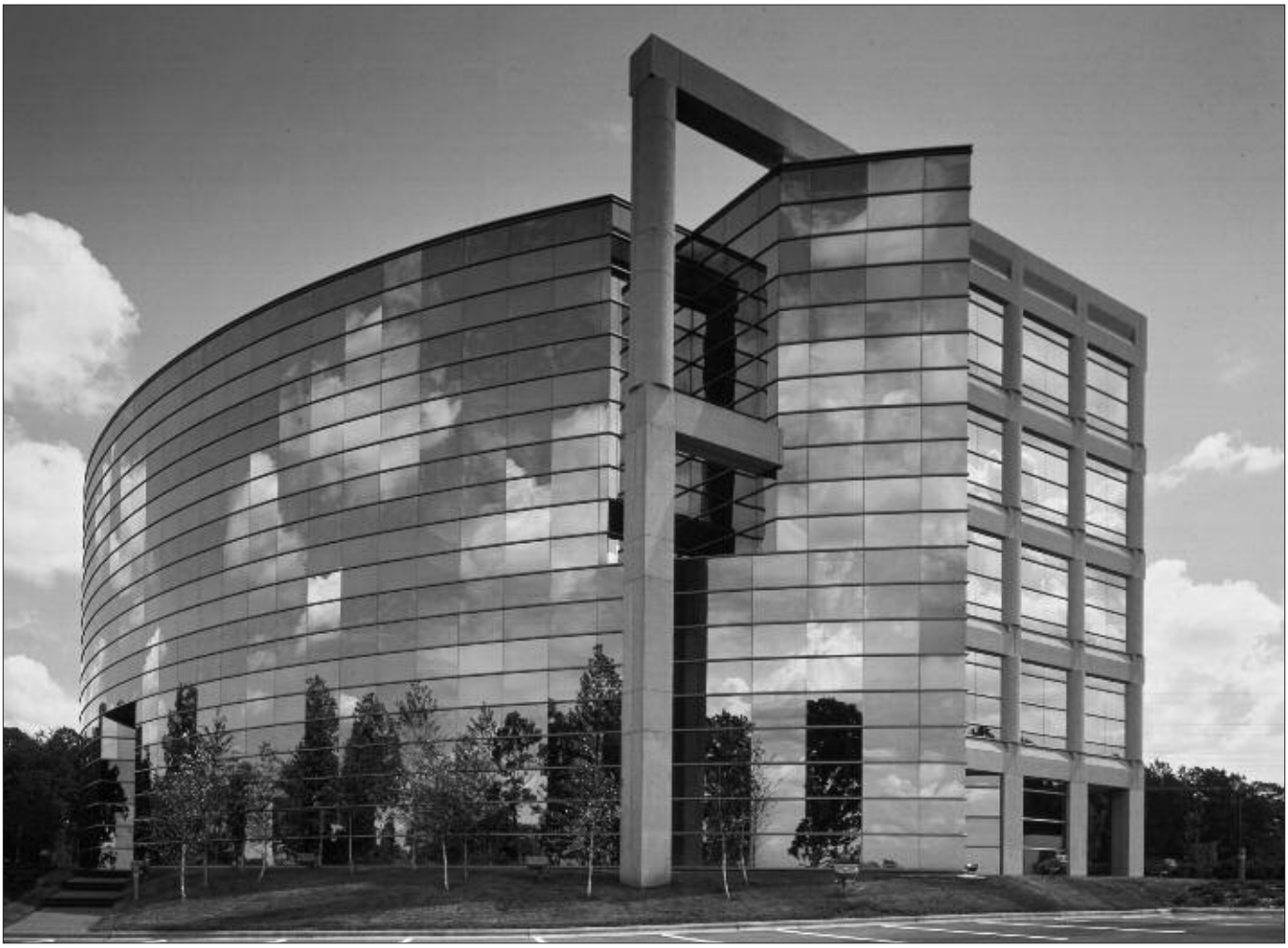

Project: 205 Executive Park, Charlotte, N.C.

CURTAIN WALLS

Technical Data

Thermally Improved • Series 3150

Series 3150 Curtain Wall combines the horizontal members of Series 3250 Curtain Wall with Structural Silicone Glazed Vertical Mullions. Narrow 3/8" (9.5) wide silicone joints and vertical mullions hidden behind the glass create the appearance of a glass wall with horizontal feature strips.

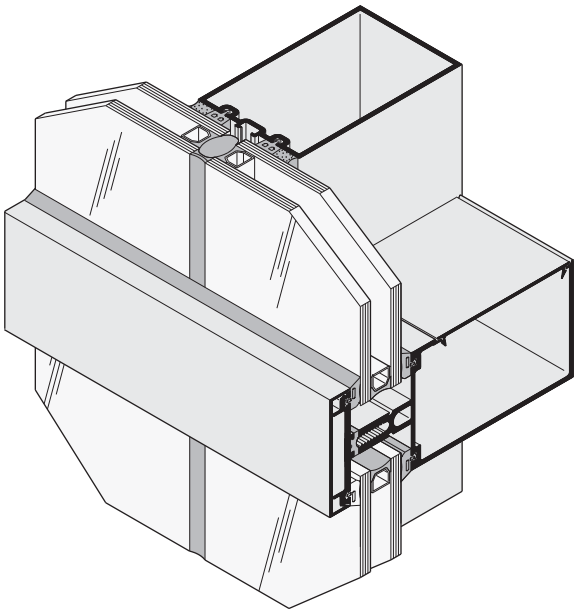

SERIES 3150
Structural Silicone Vertical Glazed Curtain Wall

SERIES	WIDTH	DEPTH	GLAZING INFILL	APPLICATIONS
3150	2-1/2" (63.5)	5-1/4" (133.4) 6-1/4" (158.8) 9-1/4" (235)	1/4" (6)	Low-Rise to Mid-Rise Buildings Where Total Glass Appearance is Required.
	2-1/2" (63.5)	6" (152.4) 7" (177.8) 10" (254)	1" (25) and/or 1/4" (6)	

For custom size and profile extrusions please visit **usalum.com.**

GLASS SIZES*	
For Glass Height	= Daylight Opening + 1" (25.4)
For Glass Width	= Daylight Opening + Glass Bites (see details)

* These formulae do not take into account glass tolerances. Consult glass manufacturer before ordering glass.

CURTAIN WALLS

Special Features

Thermally Improved • Series 3150

Install Injection Molded Closure Plates at top and bottom of verticals to ensure a continuous perimeter seal.

Slide top and bottom "T" Anchors into vertical members. Install verticals plumb and level. Secure top and bottom "T" Anchors to structure.

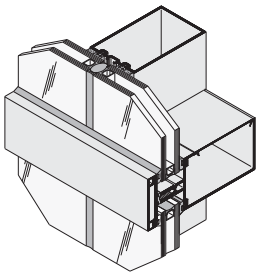

Structural Silicone Vertical Glazed Curtain Wall

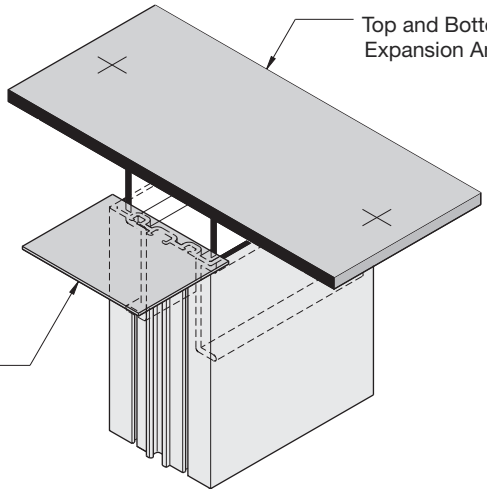

NOTE: To accelerate installation times with pinpoint accuracy of Horizontal Shear Blocks to Curtain Wall Mullions see pages 56-P1 and 57-P1.

Injected Molded End Dams are for controlling any infiltrated water. Apply sealant to three contact sides of End Dams and slide between vertical and horizontal joints as shown.

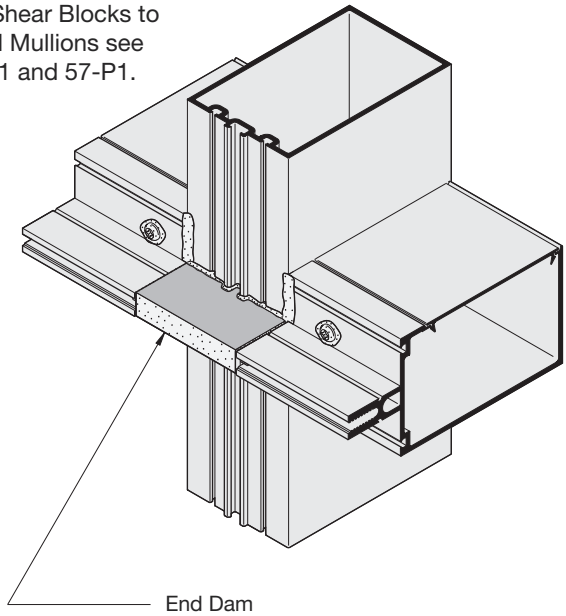

Twist-In Temporary Glass Retainers are used to support the glass until the structural silicone has fully cured in accordance with silicone manufacturer's recommendations. The Retainers are reusable.

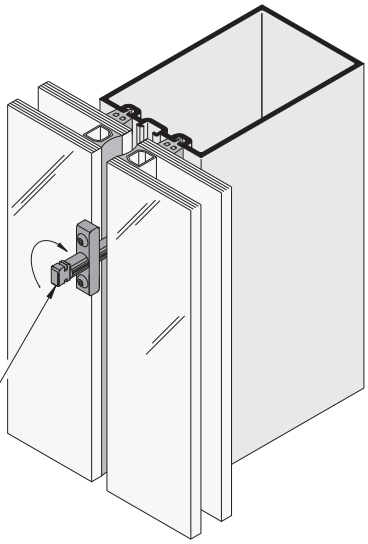

CURTAIN WALLS

Typical Details

Thermally Improved • Series 3150

VERTICAL MULLIONS FOR 1/4" (6) GLAZING

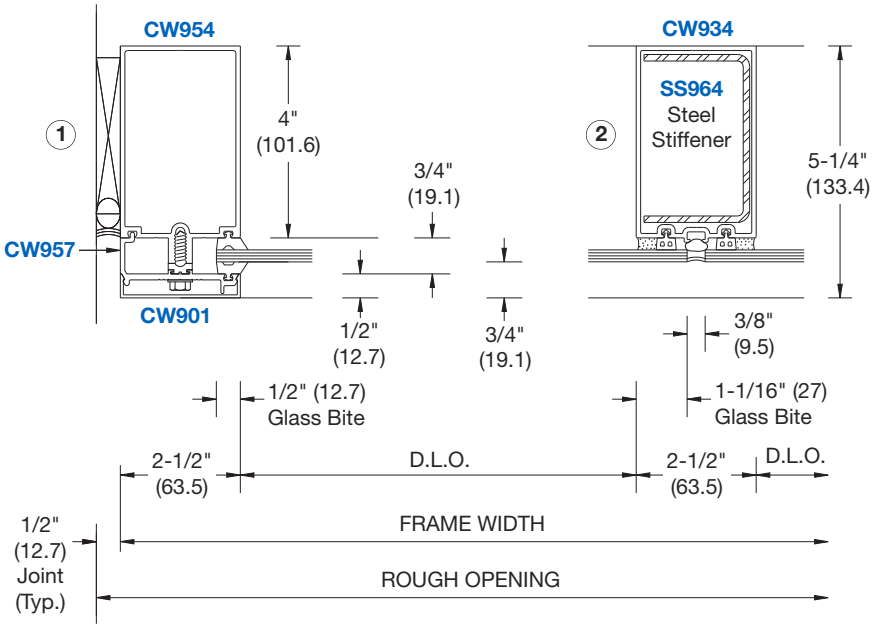

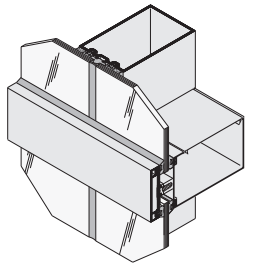

Structural Silicone Vertical Glazed Curtain Wall

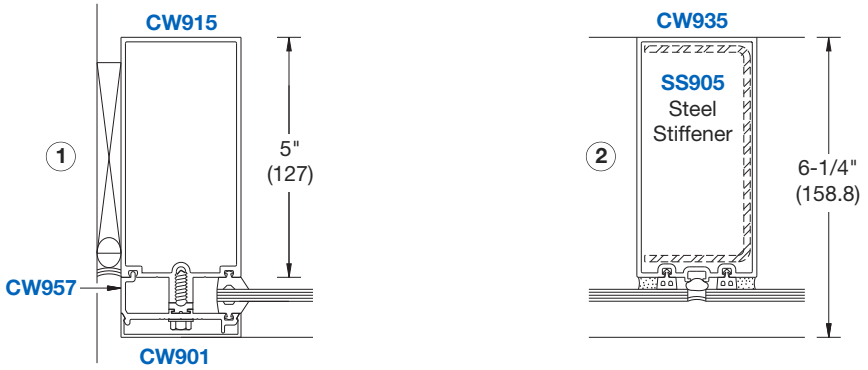

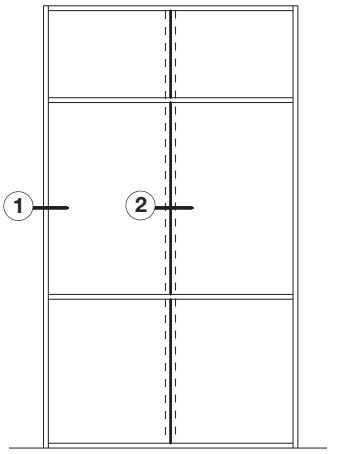

TYPICAL ELEVATION

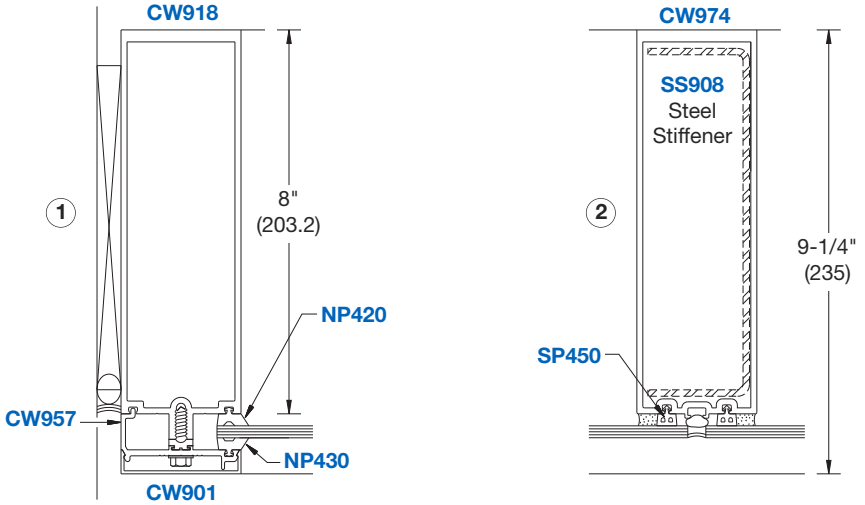

NOTE: Part numbers shown are available in 24' (7.3 m) stock lengths. Visit **usalum.com** for more information.

NOT TO SCALE

CURTAIN WALLS

Typical Details

Thermally Improved • Series 3150

OPEN BACK HORIZONTAL MULLIONS FOR 1/4" (6) GLAZING

NOTE: Part numbers shown are available in 24' (7.3 m) stock lengths. Visit **usalum.com** for more information.

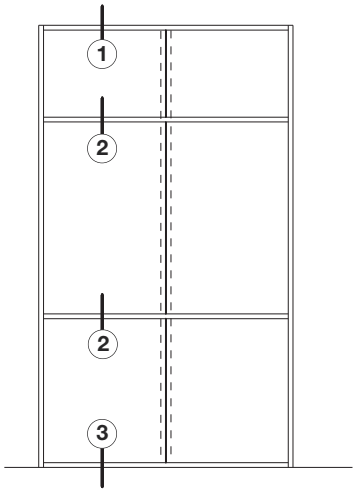

TYPICAL ELEVATION

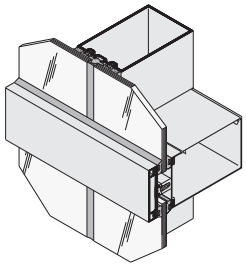

Structural Silicone Vertical Glazed Curtain Wall

NOTE: Open back-side of top and intermediate horizontals **are always up** as shown. The open back is down at the sill only.

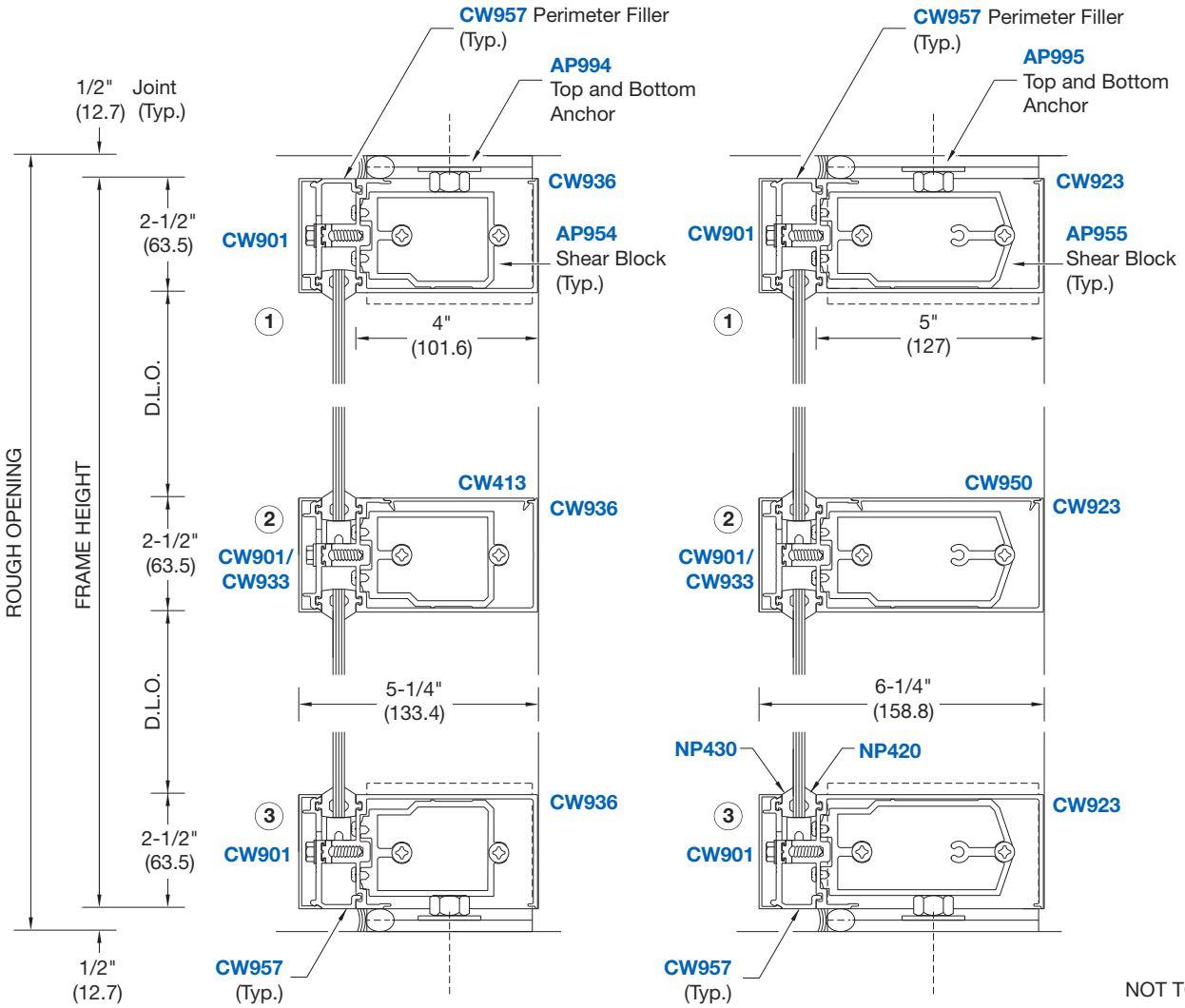

NOT TO SCALE

CURTAIN WALLS

Typical Details

Thermally Improved • Series 3150

TUBULAR HORIZONTAL MULLIONS FOR 1/4" (6) GLAZING

NOTE: Part numbers shown are available in 24' (7.3 m) stock lengths. Visit **usalum.com** for more information.

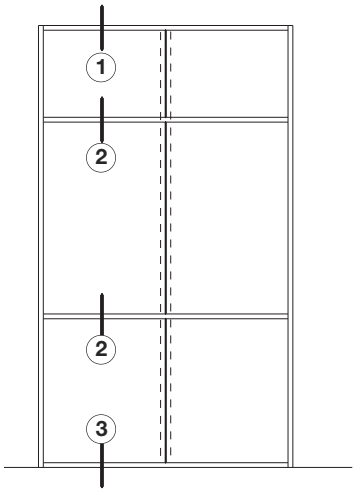

TYPICAL ELEVATION

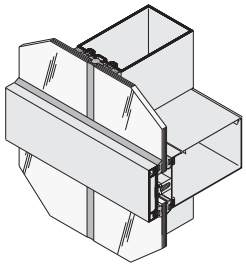

Structural Silicone Vertical Glazed Curtain Wall

NOTE: Tubular Horizontals Must Be Used When Span Exceeds 6'0" (1.83m) or if Deadload Exceeds 250 lbs. (113.4 Kg)

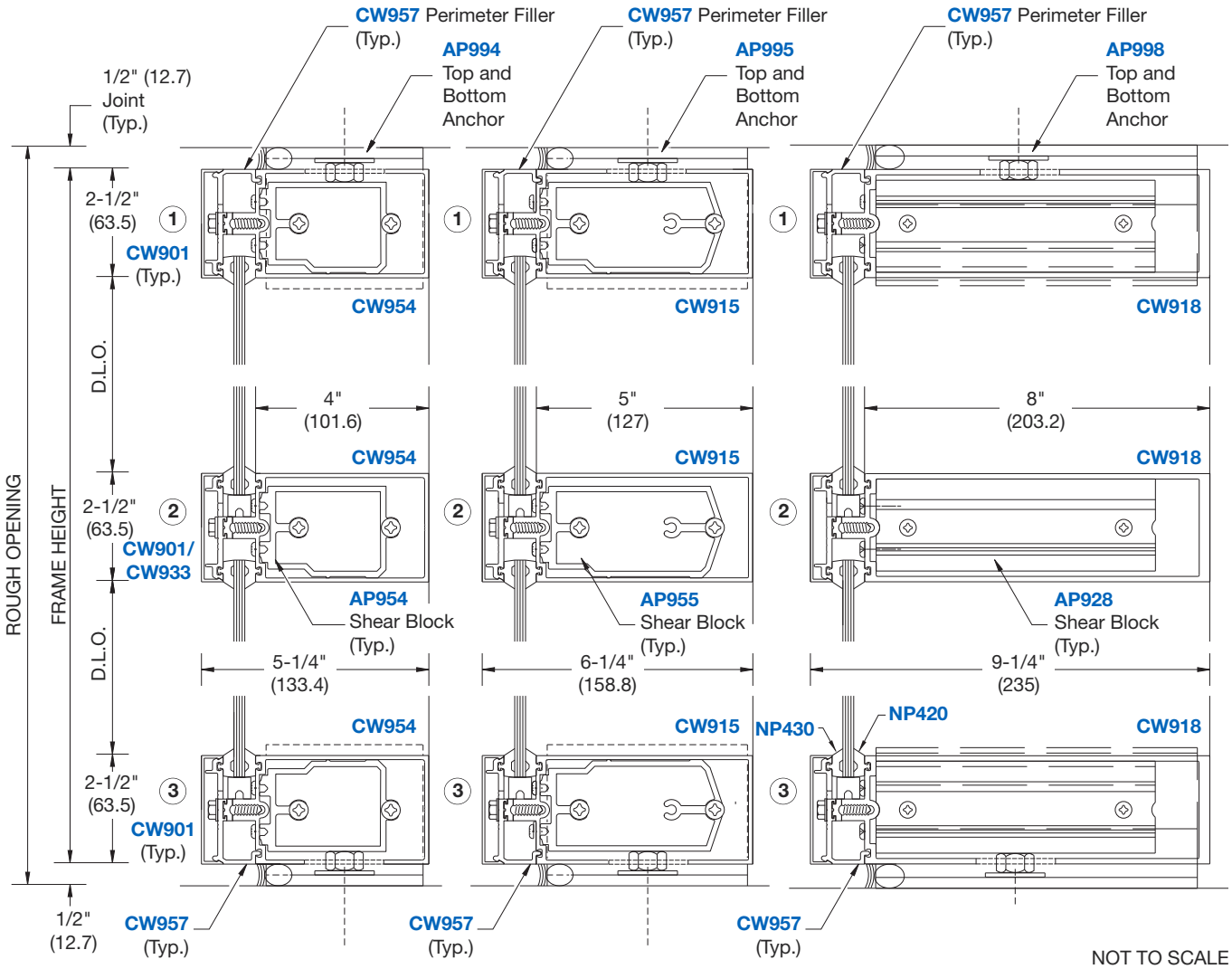

NOT TO SCALE

CURTAIN WALLS

Typical Details

Thermally Improved • Series 3150

STRUCTURAL SILICONE 90 DEGREE CORNER CONDITIONS FOR 1/4" (6) GLAZING

NOTE: Not Available for 8" (203.2) Back Members

NOTE: Part numbers shown are available in 24' (7.3 m) stock lengths. Visit **usalum.com** for more information.

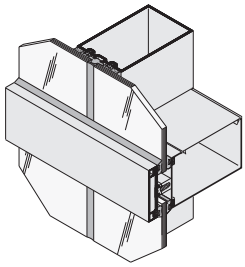

Structural Silicone Vertical Glazed Curtain Wall

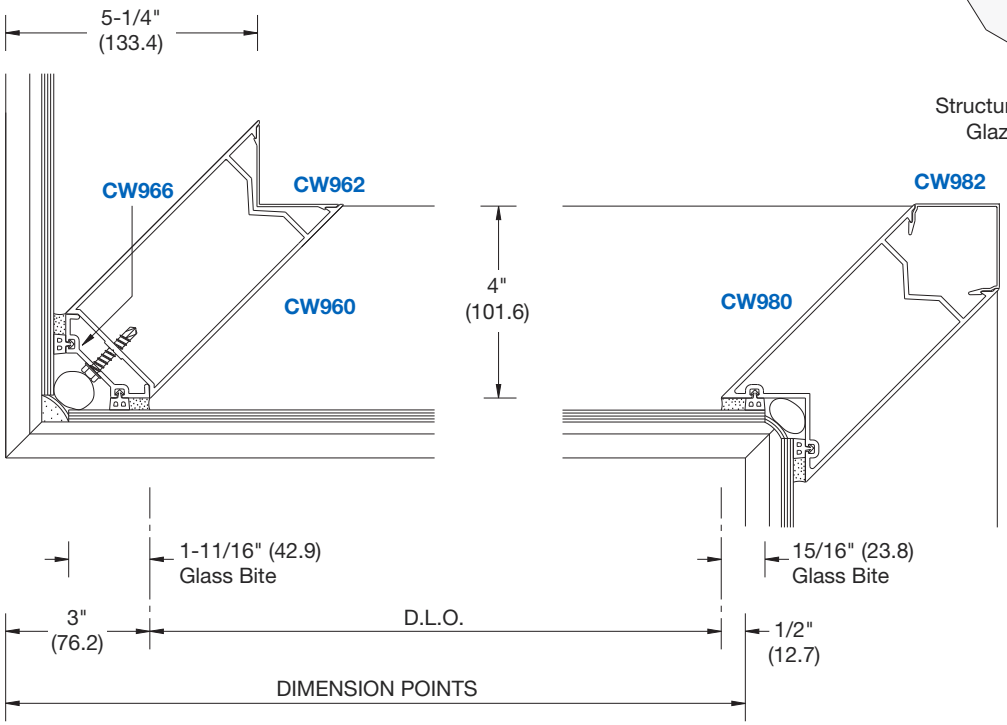

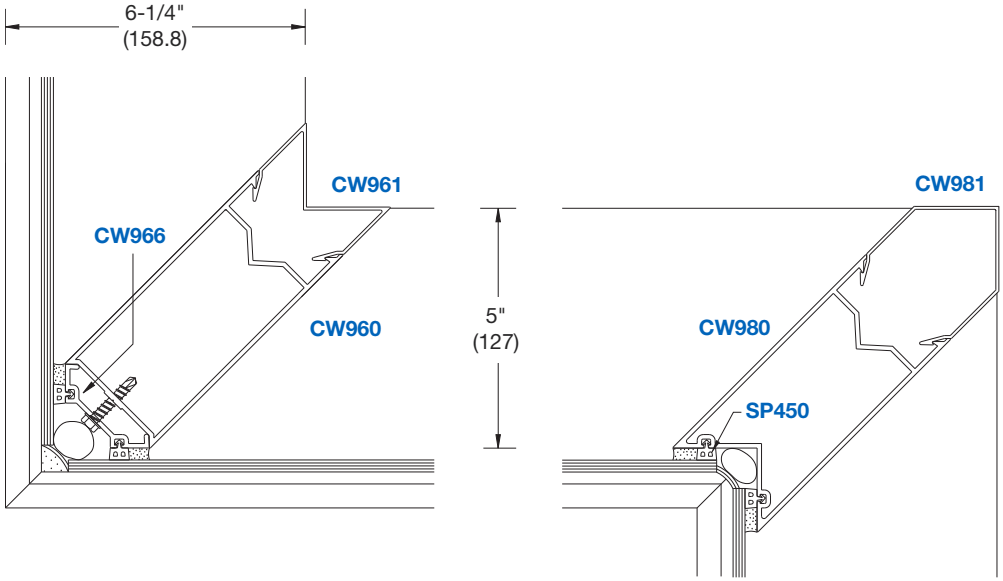

NOT TO SCALE

CURTAIN WALLS

Typical Details

Thermally Improved • Series 3150

DOOR FRAMING - 1/4" (6) GLAZING

NOTE: Door Frames are available in stock to accommodate 36" x 84" (914 x 2134) and 72" x 84" (1829 x 2134) door openings. Visit usalum.com for more information.

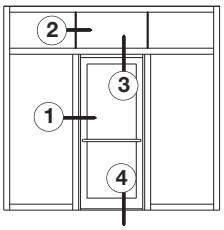

CENTER HUNG DOOR

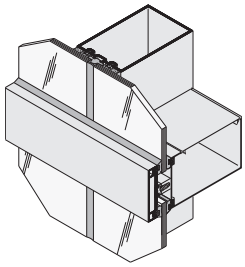

Structural Silicone Vertical Glazed Curtain Wall

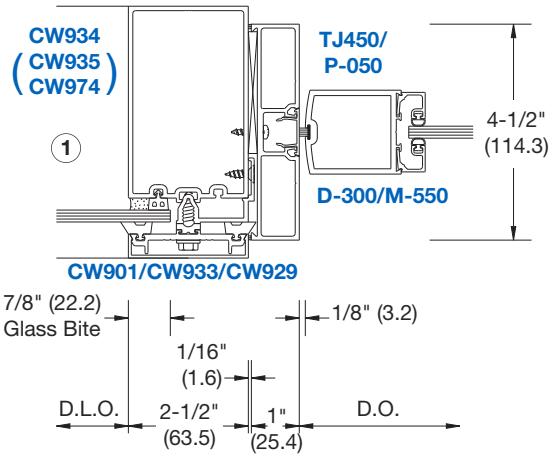

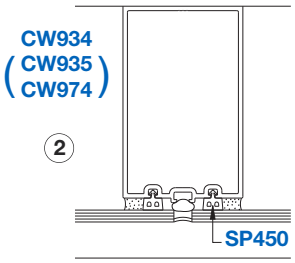

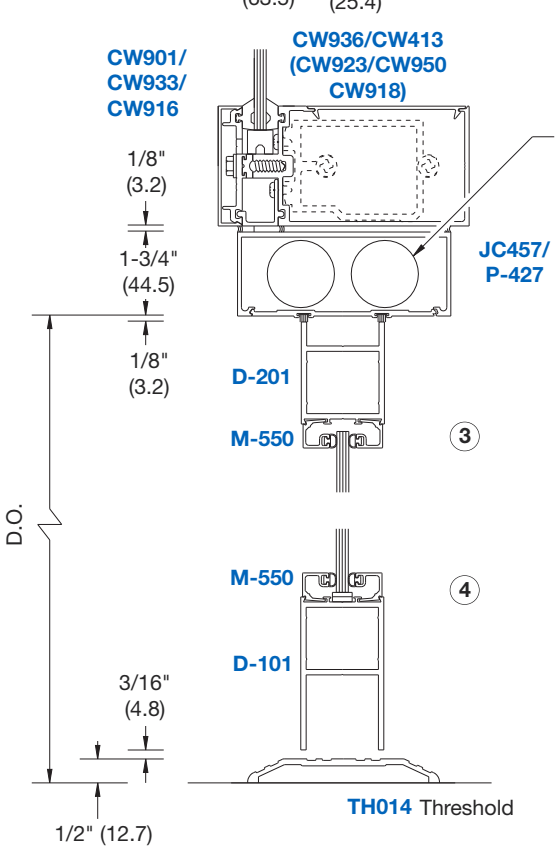

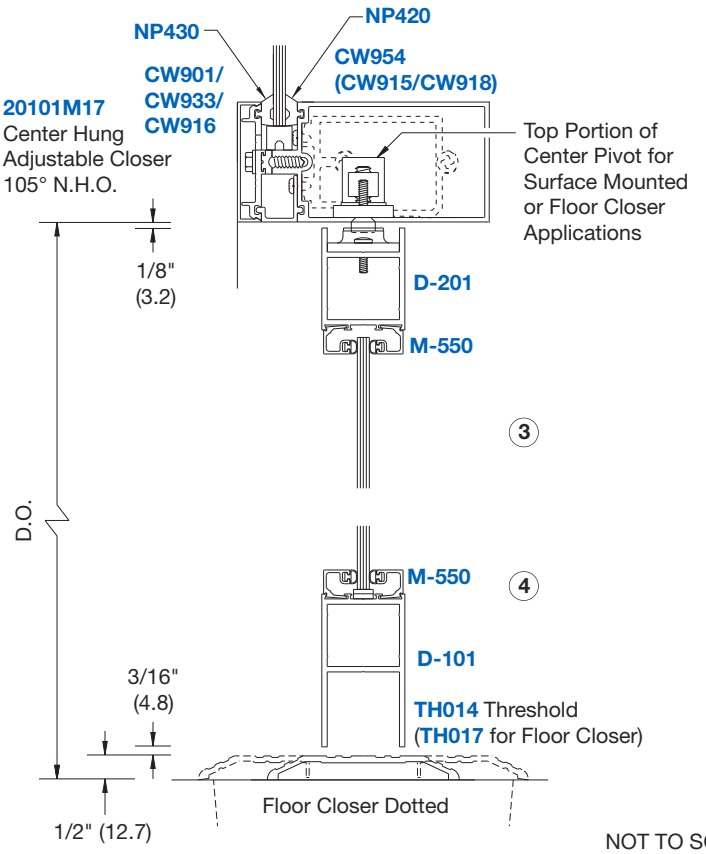

NOT TO SCALE

CURTAIN WALLS

Typical Details

Thermally Improved • Series 3150

DOOR FRAMING - 1/4" (6) GLAZING

NOTE: Door Frames are available in stock to accommodate 36" x 84" (914 x 2134) and 72" x 84" (1829 x 2134) door openings. Visit **usalum.com** for more information.

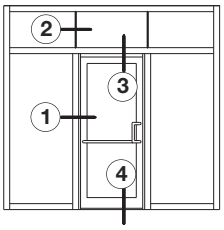

OFFSET HUNG DOOR

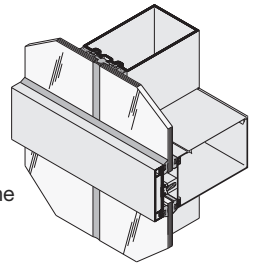

Structural Silicone Vertical Glazed Curtain Wall

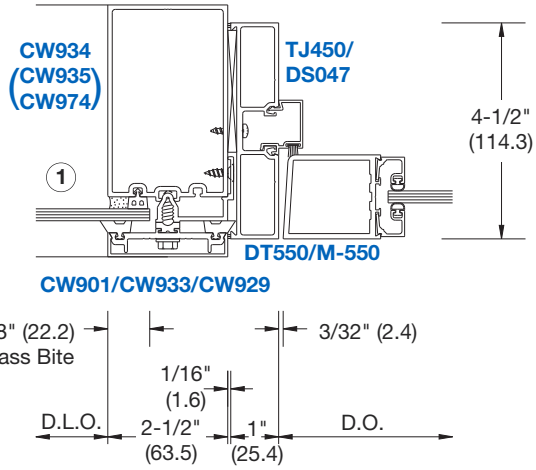

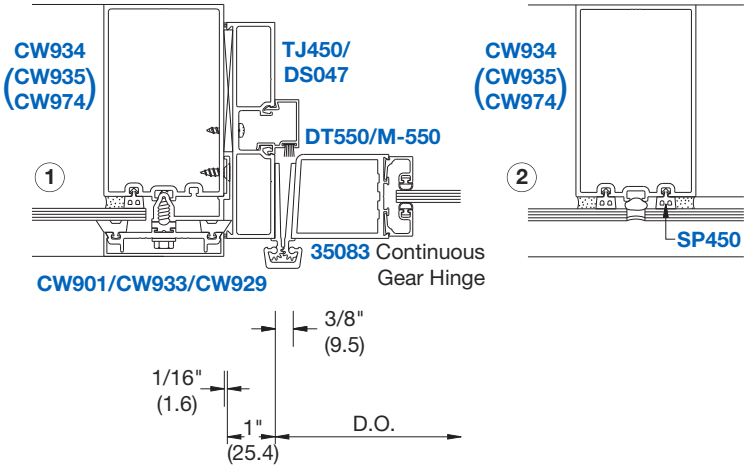

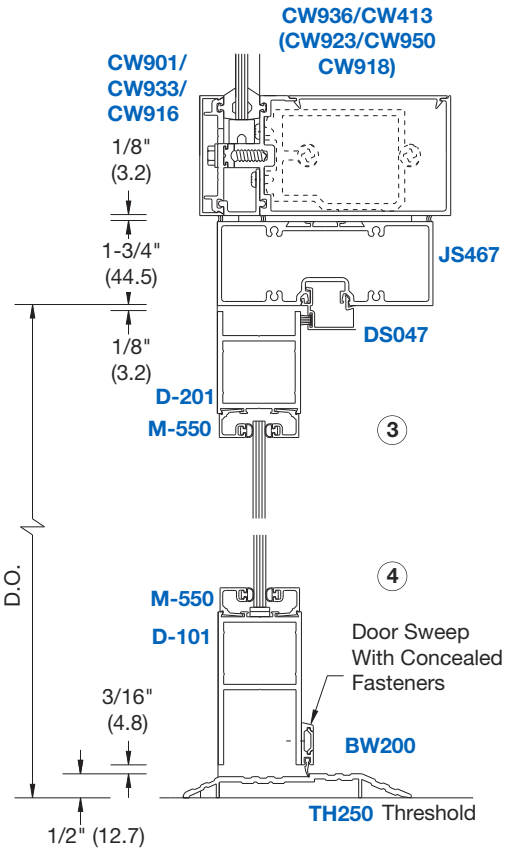

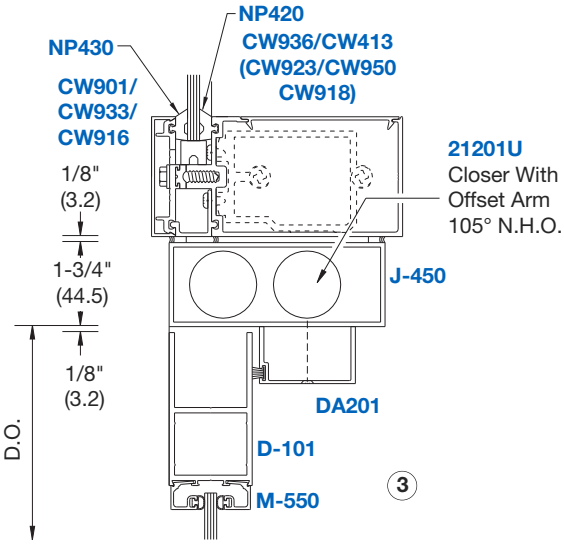

NOT TO SCALE

CURTAIN WALLS

Typical Details

Thermally Improved • Series 3150

VERTICAL MULLIONS FOR 1" (25) GLAZING

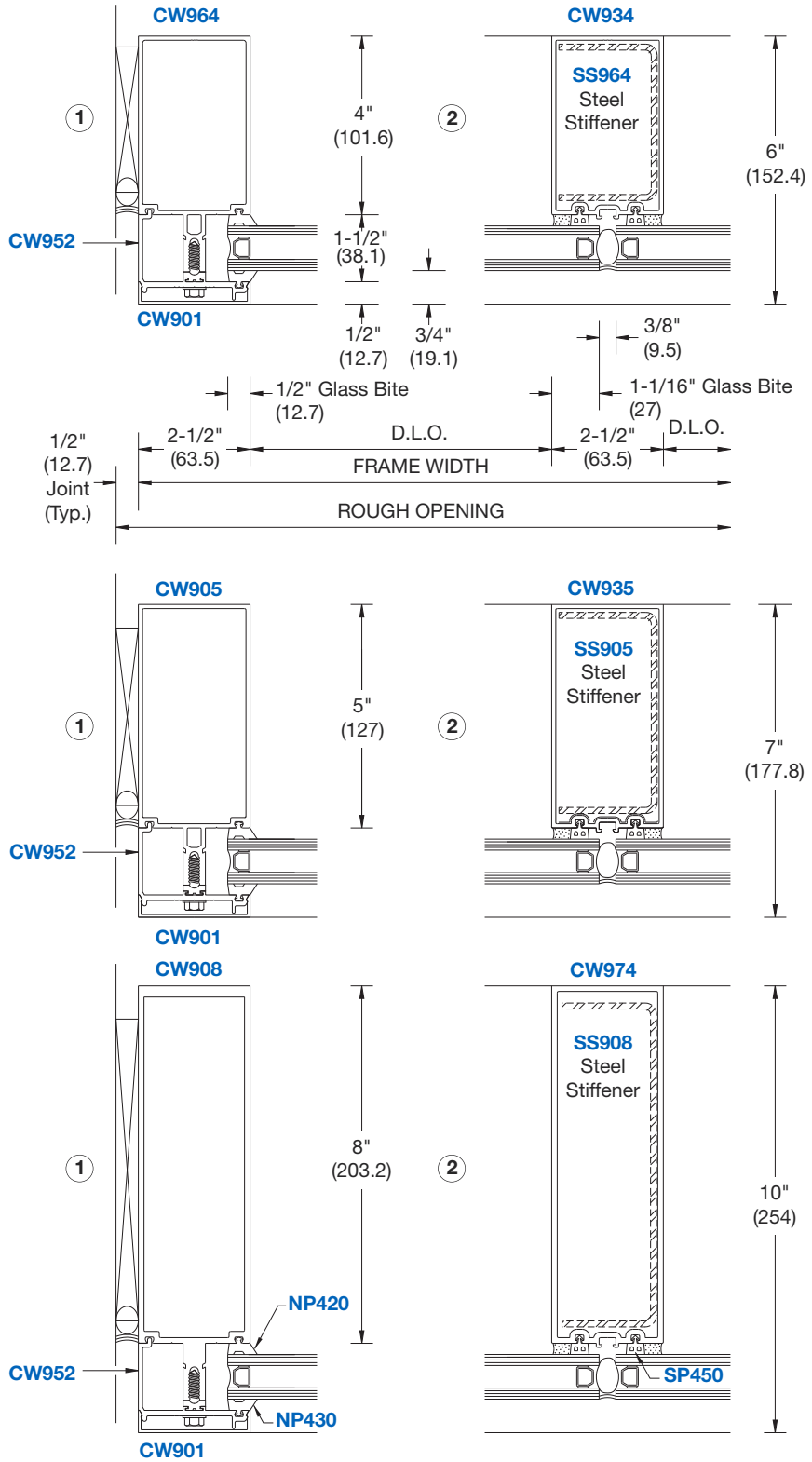

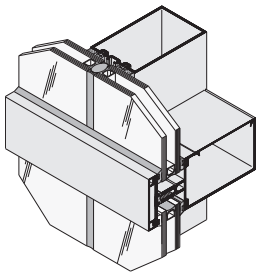

Structural Silicone Vertical Glazed Curtain Wall

NOTE: Part numbers shown are available in 24' (7.3 m) stock lengths. Visit **usalum.com** for more information.

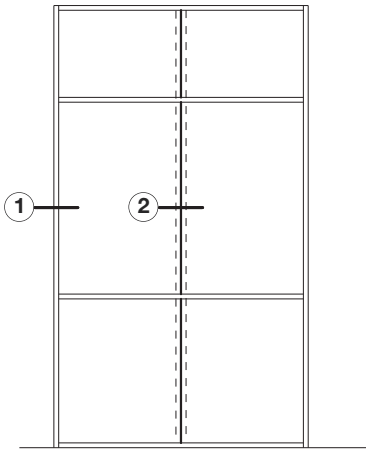

TYPICAL ELEVATION

NOT TO SCALE

CURTAIN WALLS

Typical Details

Thermally Improved • Series 3150

OPEN BACK HORIZONTAL MULLIONS FOR 1" (25) GLAZING

NOTE: Part numbers shown are available in 24' (7.3 m) stock lengths. Visit **usalum.com** for more information.

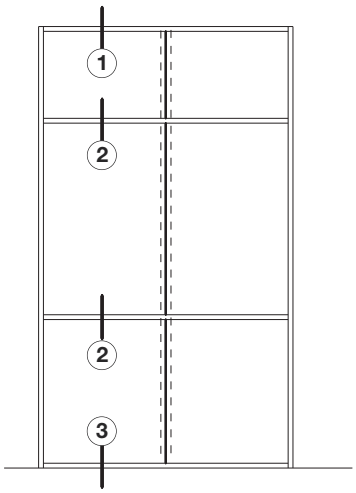

TYPICAL ELEVATION

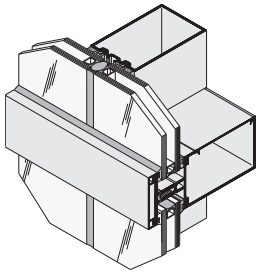

Structural Silicone Vertical Glazed Curtain Wall

NOTE: Open Back Side of Top and Intermediate Horizontals are Always Up as Shown. The Open Back is Down at the Sill Only.

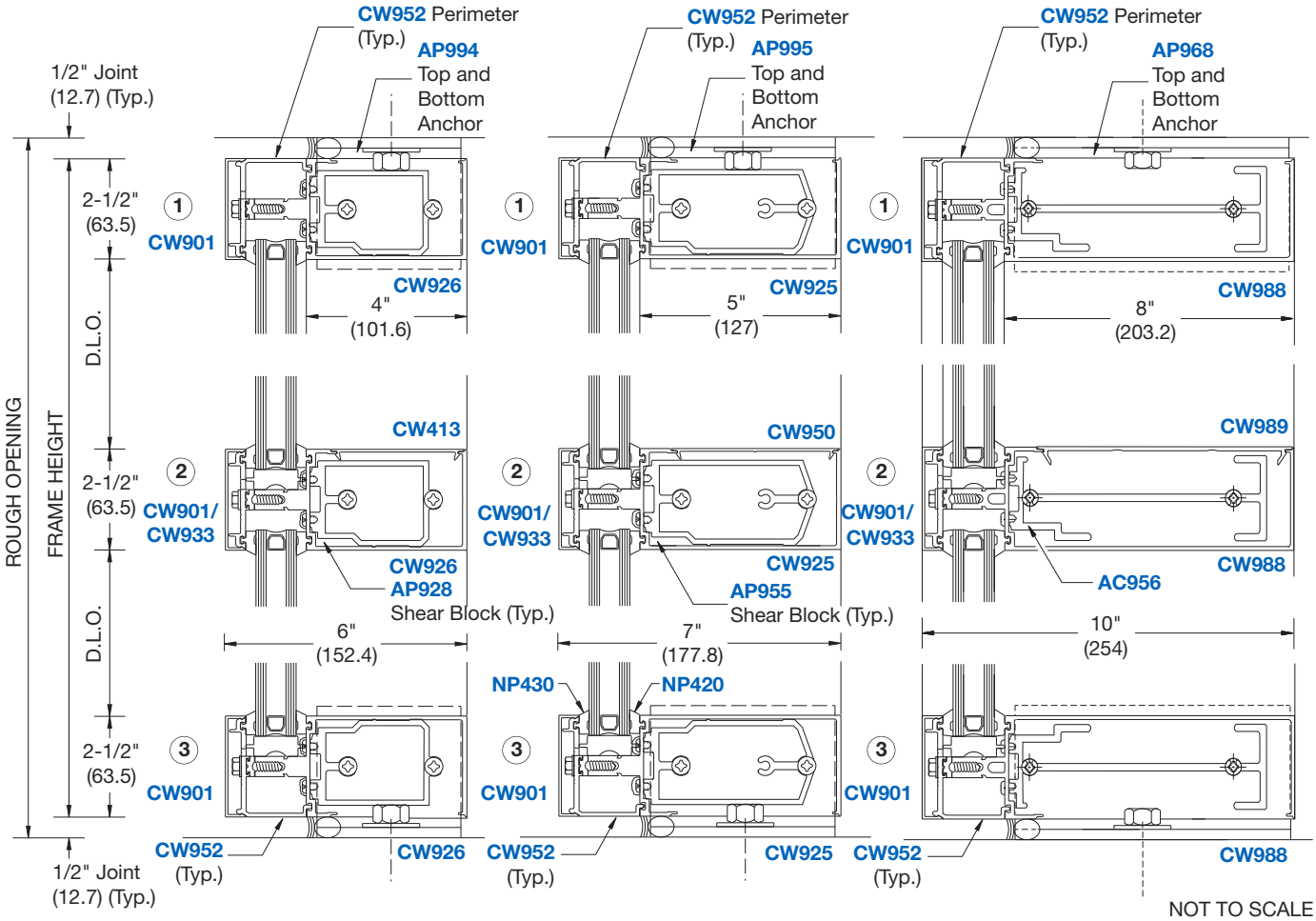

CURTAIN WALLS

Typical Details

Thermally Improved • Series 3150

TUBULAR HORIZONTAL MULLIONS FOR 1" (25) GLAZING

NOTE: Part numbers shown are available in 24' (7.3 m) stock lengths. Visit **usalum.com** for more information.

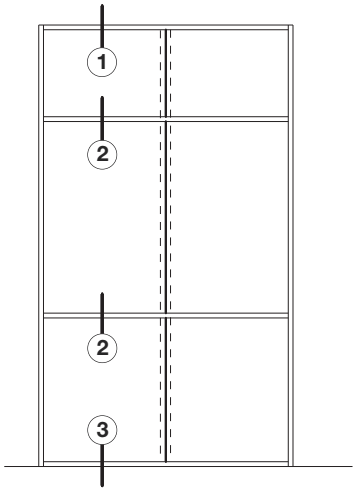

TYPICAL ELEVATION

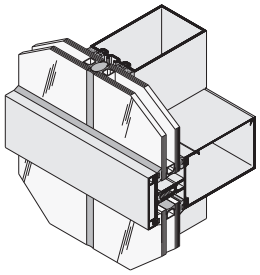

Structural Silicone Vertical Glazed Curtain Wall

NOTE: Tubular Horizontals Must be Used When Span Exceeds 6'-0" (1.83 m) or if Deadload Exceeds 250 lbs. (113.4 Kg)

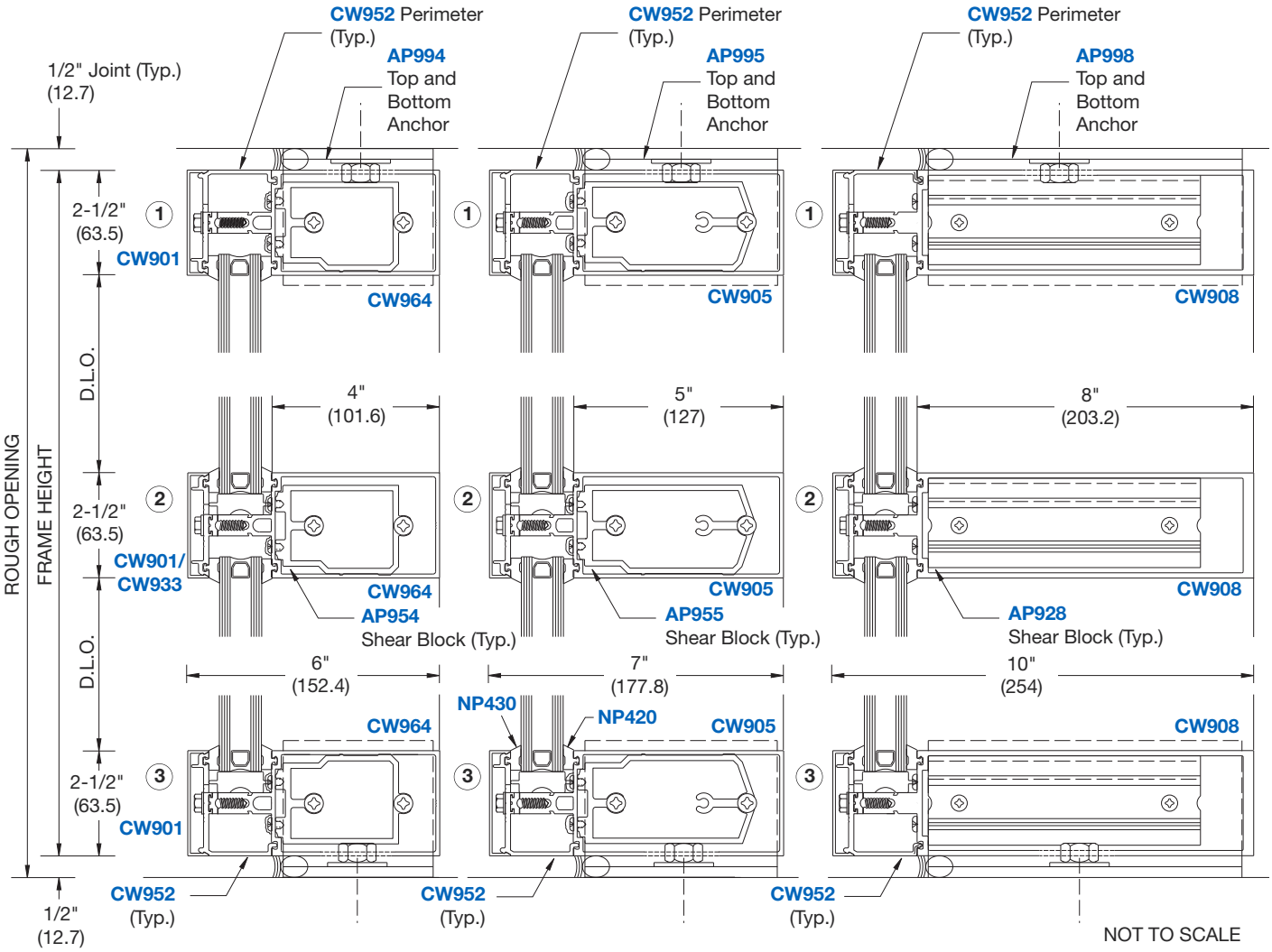

CURTAIN WALLS

Typical Details

Thermally Improved • Series 3150

STRUCTURAL SILICONE 90 DEGREE CORNER CONDITIONS FOR 1" (25) GLAZING

NOTE: Not Available for 8" (203.2) Back Members

NOTE: Part numbers shown are available in 24' (7.3 m) stock lengths. Visit **usalum.com** for more information.

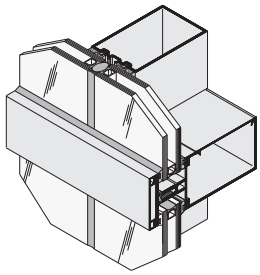

Structural Silicone Vertical Glazed Curtain Wall

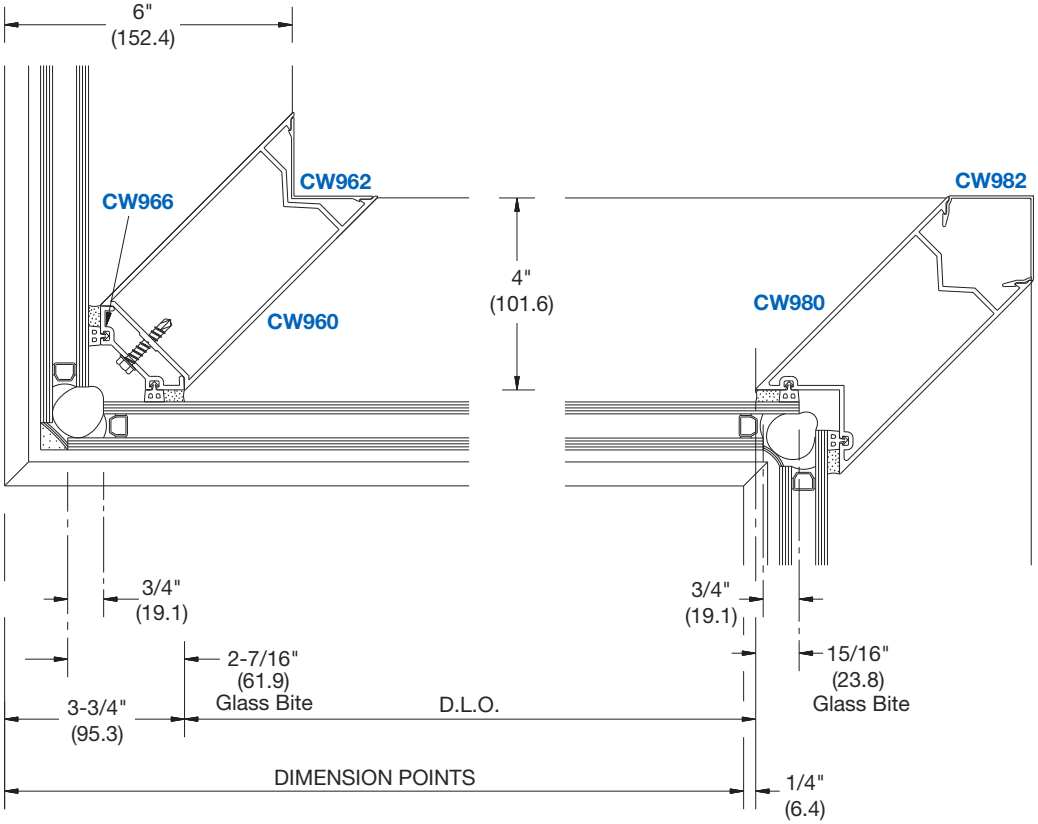

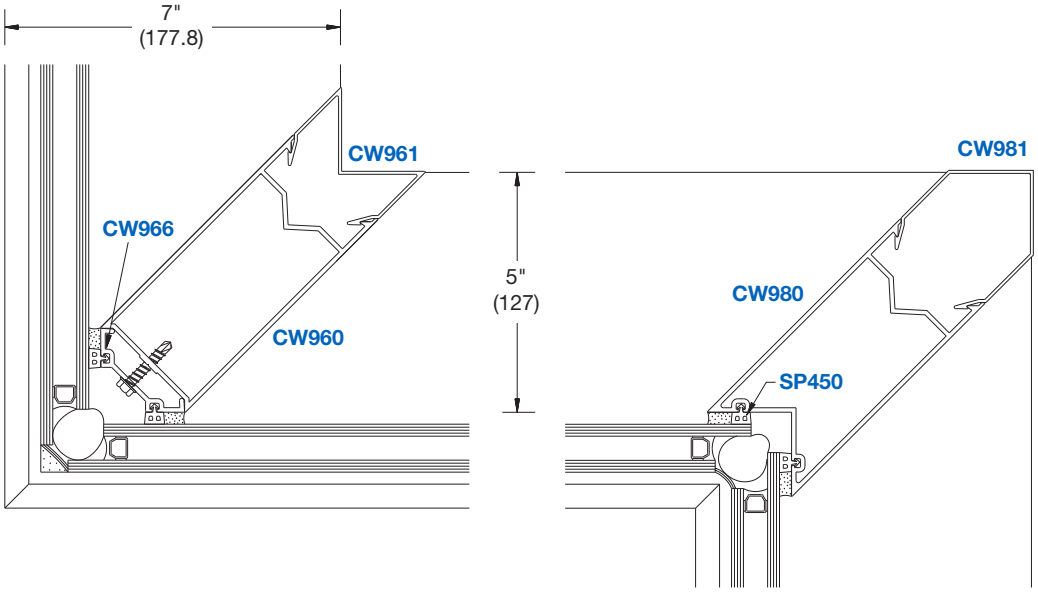

NOT TO SCALE

CURTAIN WALLS

Typical Details

Thermally Improved • Series 3150

1" (25) TO 1/4" (6) TRANSITION GLAZING

NOTE: 4" (101.6) Back Members Shown; 5" (127) and 8" (203.2) Members Similar. Corner Members are Not Available for 8" (203.2) Back Members

NOTE: Part numbers shown are available in 24' (7.3 m) stock lengths. Visit usalum.com for more information.

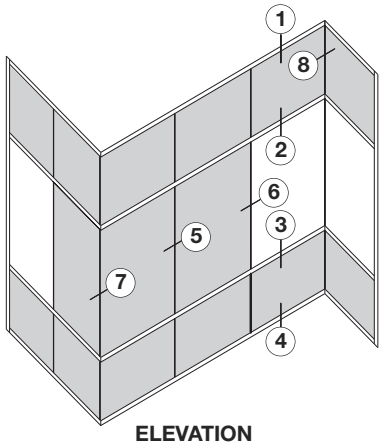

ELEVATION

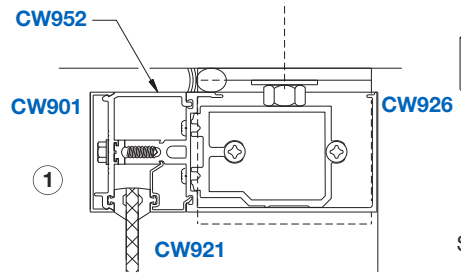

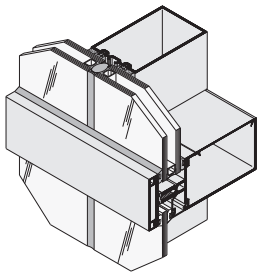

Structural Silicone Vertical Glazed Curtain Wall

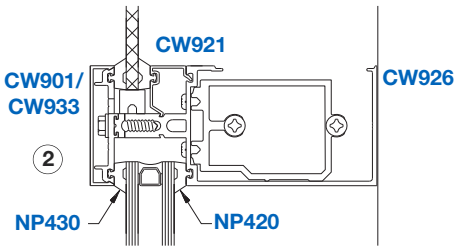

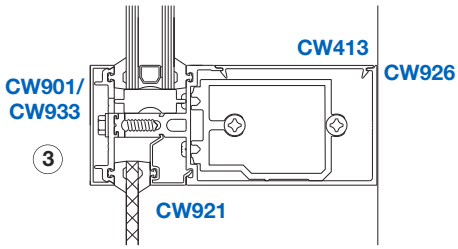

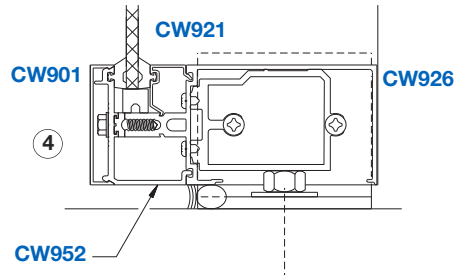

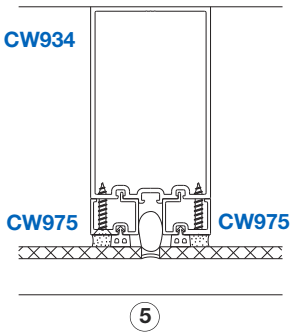

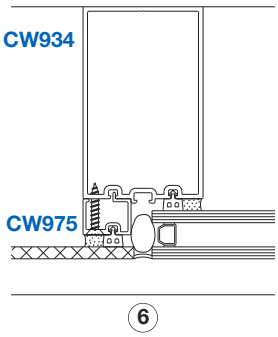

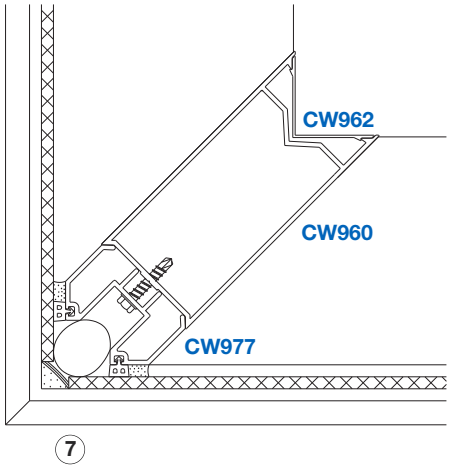

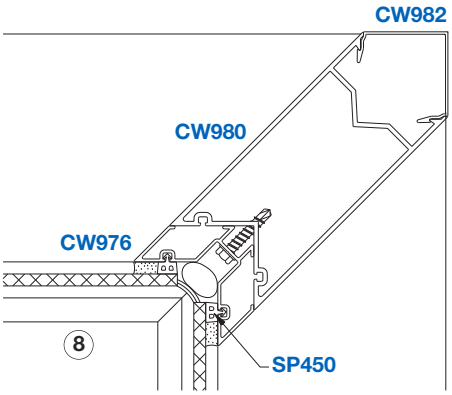

NOT TO SCALE

CURTAIN WALLS

Typical Details

Thermally Improved • Series 3150

DOOR FRAMING - 1" (25) GLAZING

NOTE: Door Frames are available in stock to accommodate 36" x 84" (914 x 2134) and 72" x 84" (1829 x 2134) door openings. Visit **usalum.com** for more information.

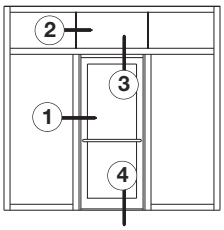

CENTER HUNG DOOR

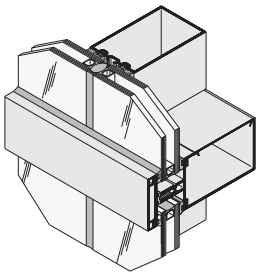

Structural Silicone Vertical Glazed Curtain Wall

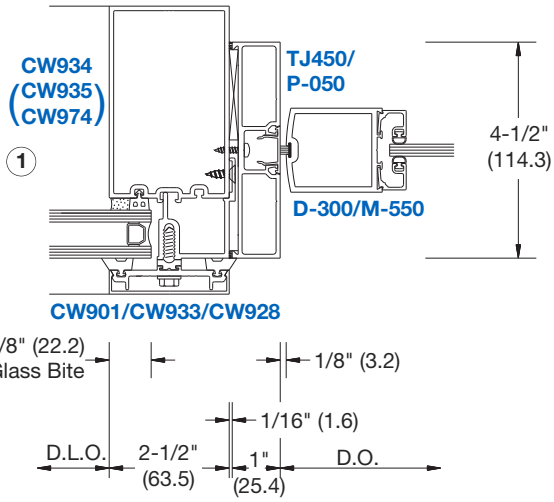

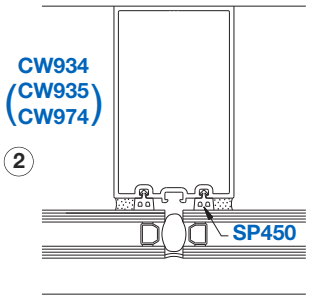

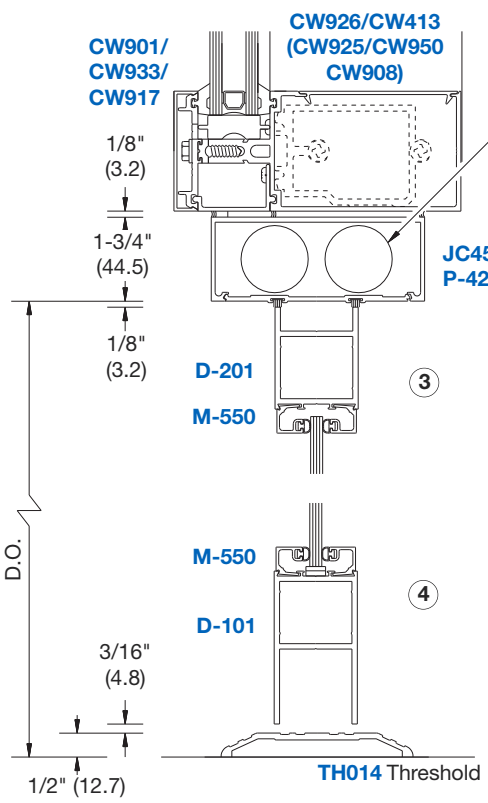

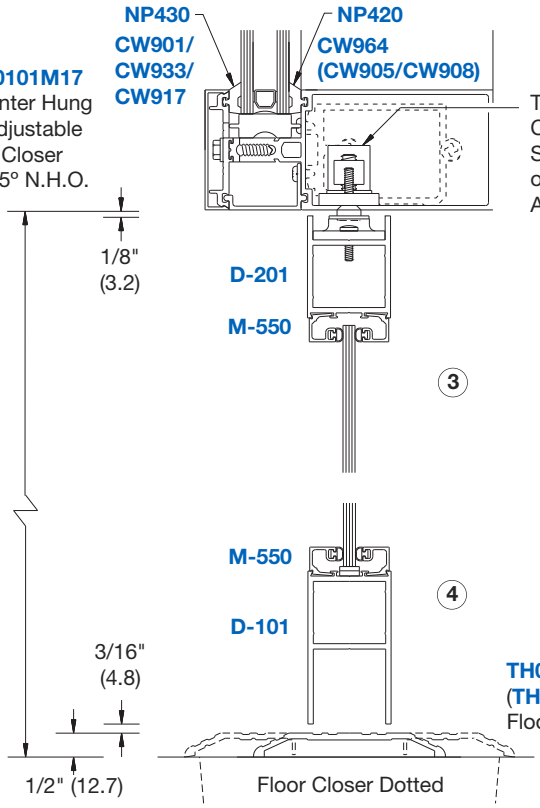

NOT TO SCALE

CURTAIN WALLS

Typical Details

Thermally Improved • Series 3150

DOOR FRAMING - 1" (25) GLAZING

NOTE: Door Frames are available in stock to accommodate 36" x 84" (914 x 2134) and 72" x 84" (1829 x 2134) door openings. Visit **usalum.com** for more information.

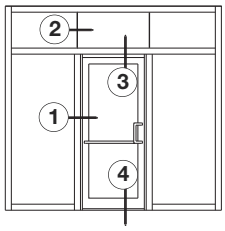

OFFSET HUNG DOOR

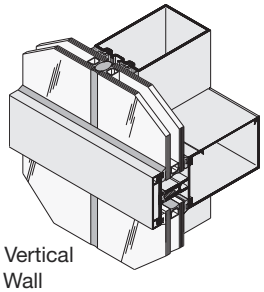

Structural Silicone Vertical Glazed Curtain Wall

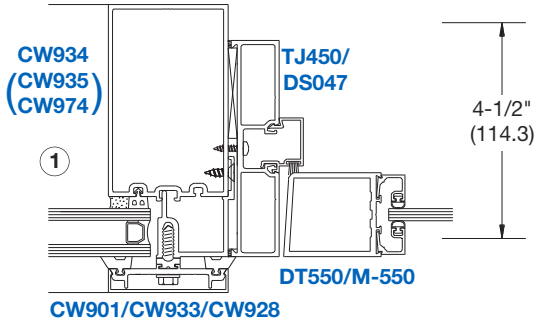

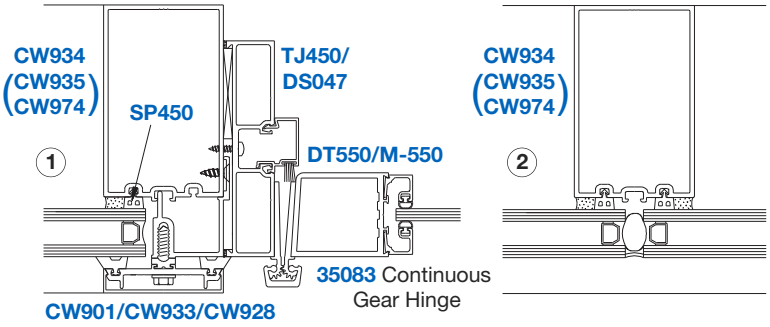

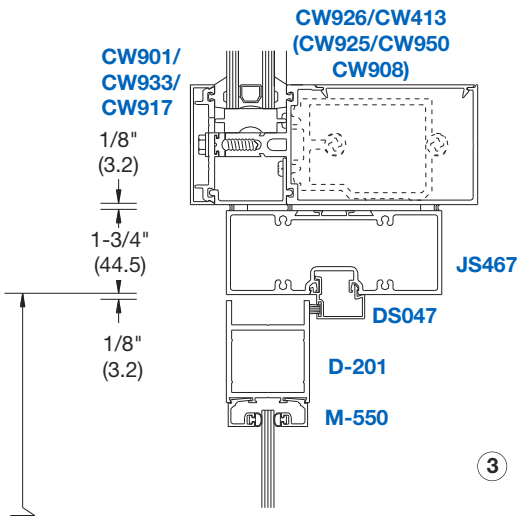

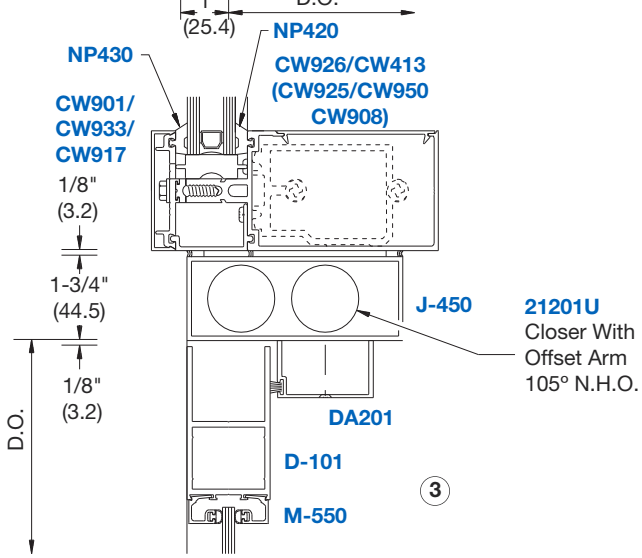

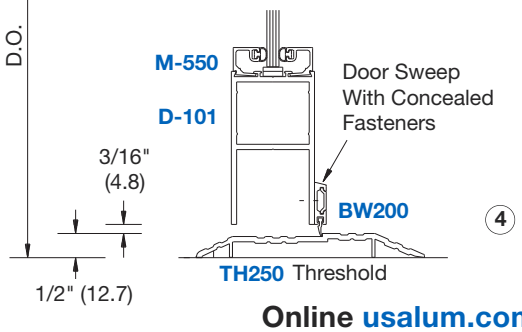

NOT TO SCALE

CURTAIN WALLS

Typical Details

Thermally Improved • Series 3150

MID-SPAN ANCHORS AND MULLION SPLICE

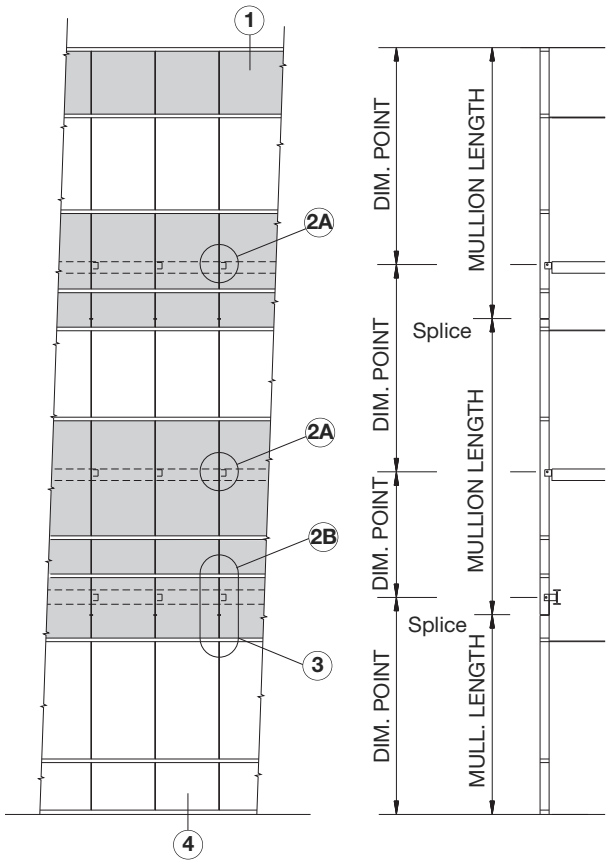

TYPICAL ELEVATION

SECTION DETAIL

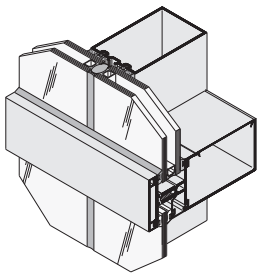

Structural Silicone Vertical Glazed Curtain Wall

2A **FIXED ANCHOR (DEADLOAD ANCHOR)**
NOTE: Anchor Type and Size Varies Per Job Requirements

For more information on Stool Trim sizes please visit **usalum.com**.

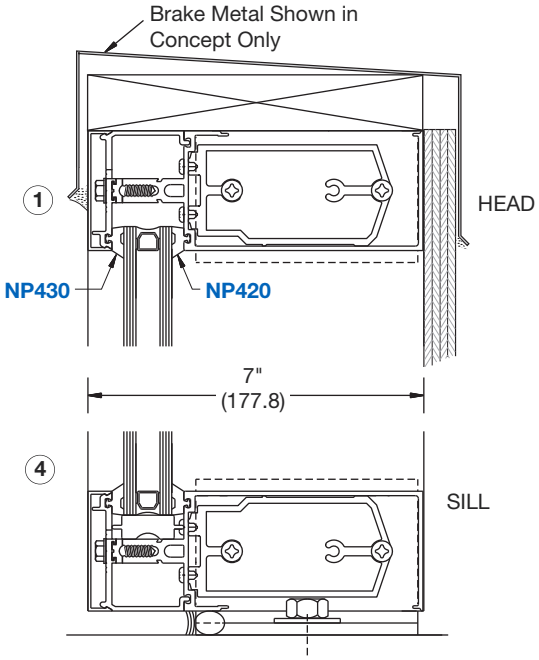

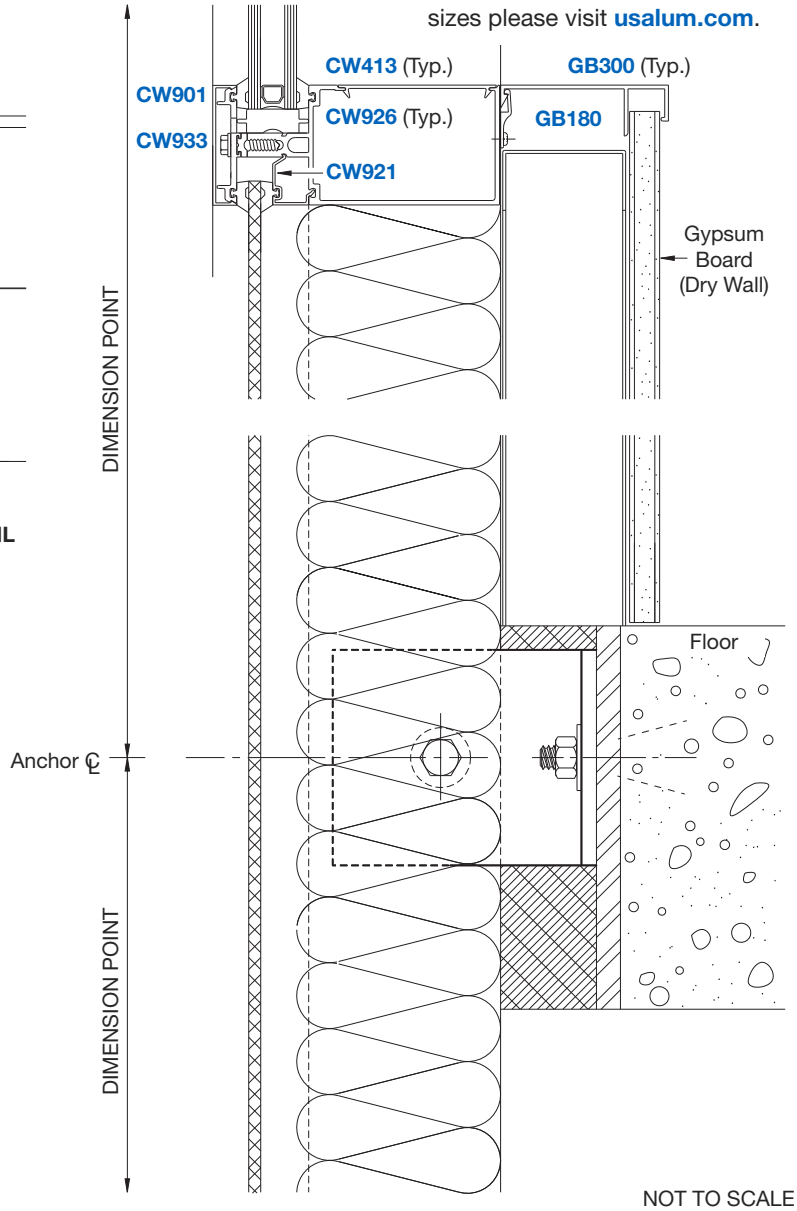

NOT TO SCALE

CURTAIN WALLS

Typical Details

Thermally Improved • Series 3150

MID-SPAN ANCHORS AND MULLION SPLICE

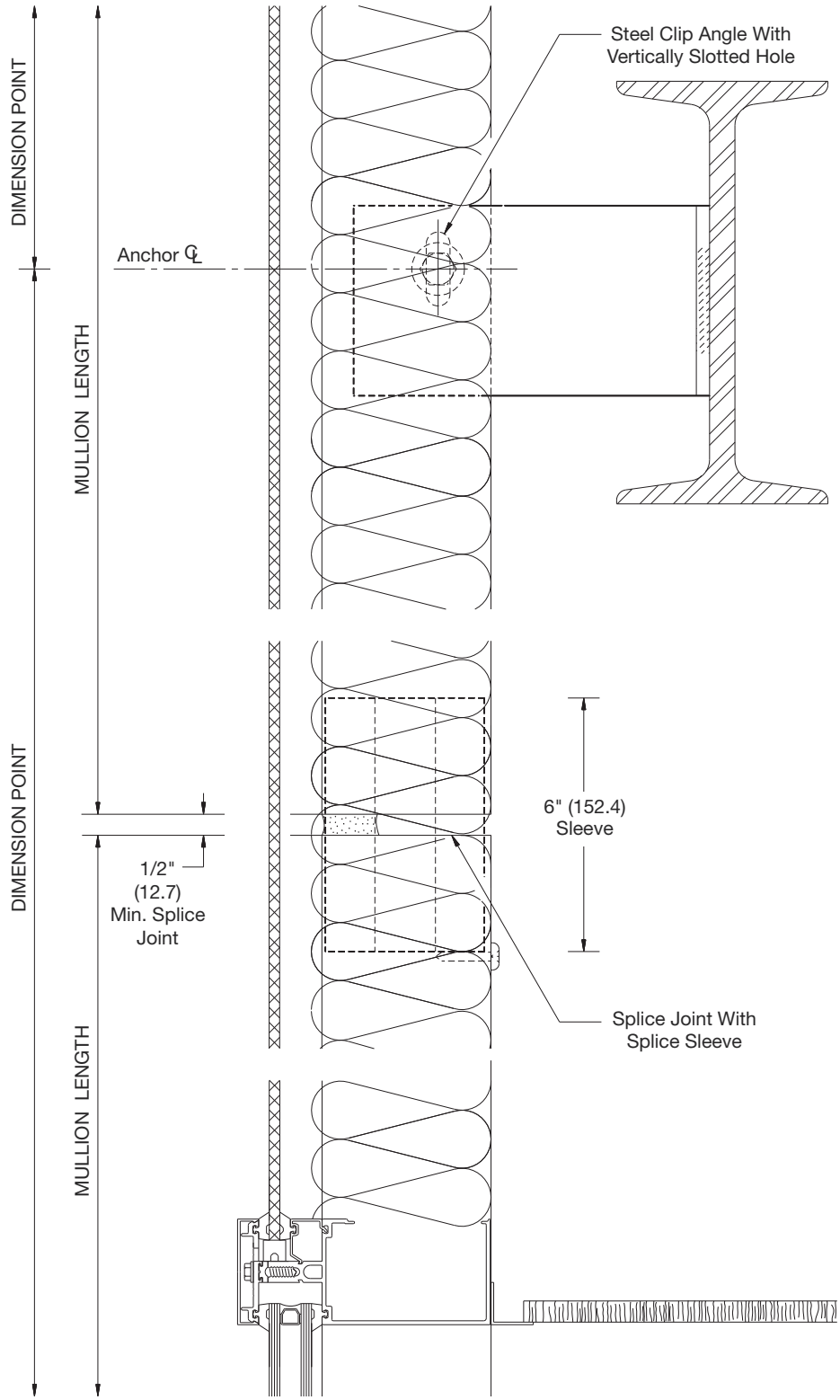

2B

EXPANSION ANCHOR (WINDLOAD ANCHOR)

NOTE: Anchor Type and Size Varies Per Job Requirements

3

SPLICE JOINT

NOTE: Joint Width Should be Based on Mullion Length and Temperature Differential. A 1/2" (12.7) Gap Allows for 1/4" (6.4) Movement.

NOT TO SCALE

CURTAIN WALLS

Windload Charts

Thermally Improved • Series 3150

STRUCTURAL SILICONE GLAZED VERTICAL MULLIONS FOR 1/4" (6) OR 1" (25) GLAZING

Mullions designed for L/175 deflection ratio and for the following allowable working stresses:

Aluminum alloy 6063-T5: allowable stress for windload 12,929 psi. (89 MPa)
Steel reinforcing allowable stress for windload 26,666 psi. (183 MPa)

Curves represent the limit values and are based on criteria for simple beam, uniformly loaded, using the distribution of wind forces on the wall with rectangular loading. Glass is not considered as contributing to resistance of deflection.

Limitation of vertical mullions for:
CURVES **A** = 15 PSF (718 Pa)
CURVES **B** = 20 PSF (957 Pa)
CURVES **C** = 25 PSF (1197 Pa)
CURVES **D** = 30 PSF (1436 Pa)

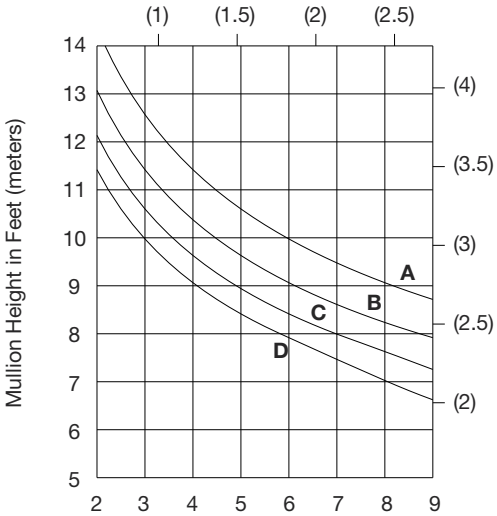

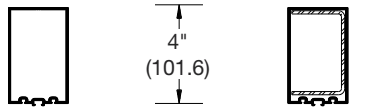

I = 2.934 (122.12 x 10^4)
S = 1.370 (22.45 x 10^3)
Steel Stiffener
I = 1.996 (83.08 x 10^4)
S = 1.141 (18.70 x 10^3)
I_{AL+STL} = 8.722 (363.03 x 10^4)

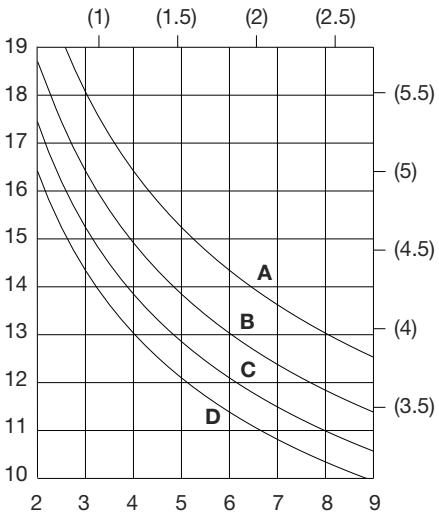

Mullion Spacing in Feet (meters)

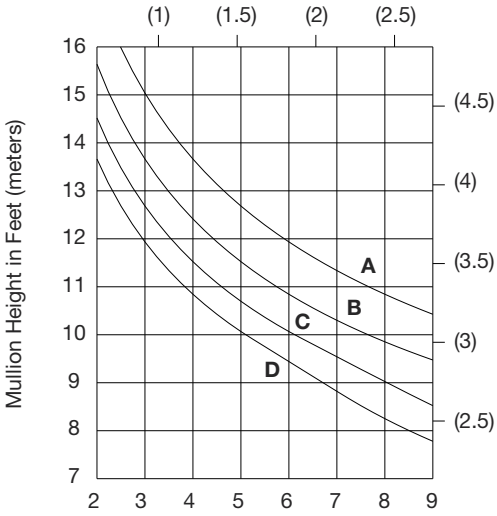

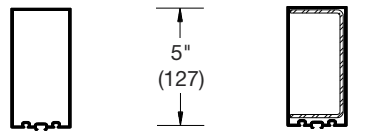

I = 5.025 (209.16 x 10^4)
S = 1.890 (30.97 x 10^3)
Steel Stiffener
I = 3.571 (148.64 x 10^4)
S = 1.587 (26 x 10^3)
I_{AL+STL} = 15.381 (640.21 x 10^4)

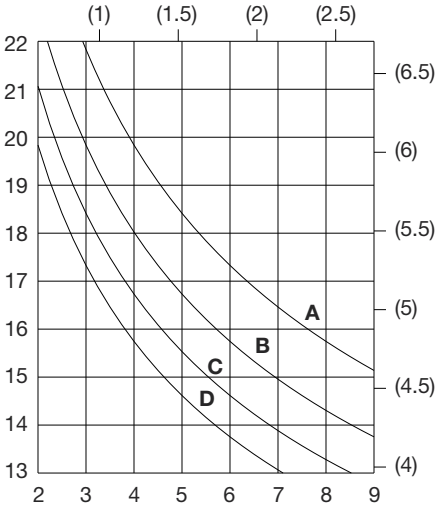

Mullion Spacing in Feet (meters)

CURTAIN WALLS

Windload Charts

Thermally Improved • Series 3150

STRUCTURAL SILICONE GLAZED VERTICAL MULLIONS FOR 1/4" (6) OR 1" (25) GLAZING

Limitation of vertical mullions for:
CURVES **A** = 15 PSF (718 Pa)
CURVES **B** = 20 PSF (957 Pa)
CURVES **C** = 25 PSF (1197 Pa)
CURVES **D** = 30 PSF (1436 Pa)

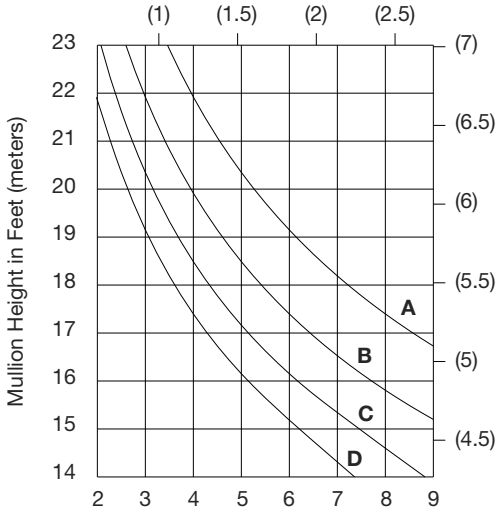

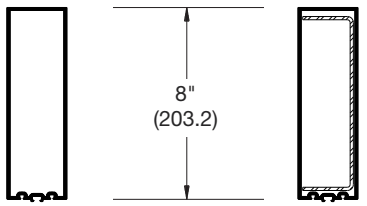

CW974

CW974
With **SS908**

I = 20.754 (863.85 x 10^4)
S = 5.011 (82.11 x 10^3)
Steel Stiffener
I = 10.725 (446.41 x 10^4)
S = 2.959 (48.49 x 10^3)
I_{AL+STL} = 51.857 (2158.45 x 10^4)

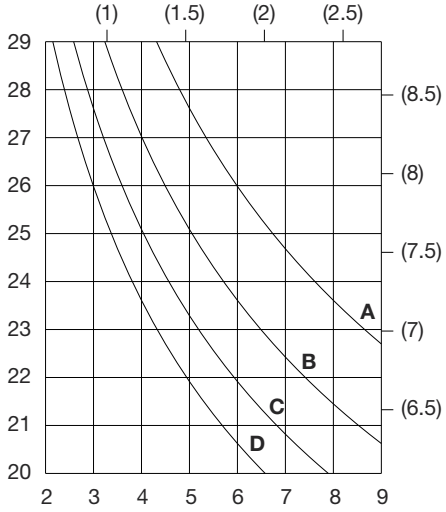

Mullion Spacing in Feet (meters)

Structural Silicone Chart

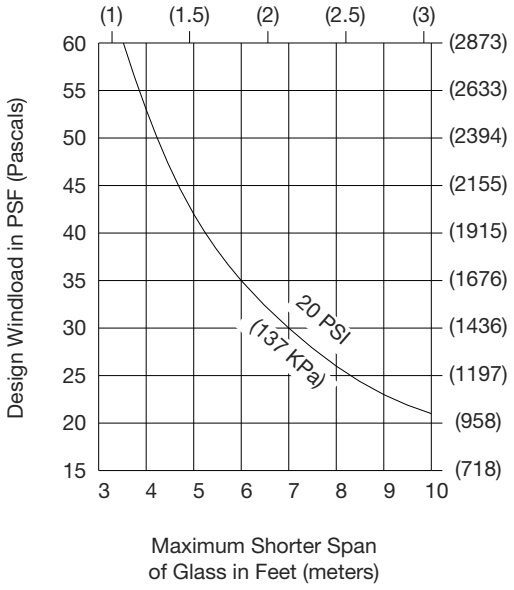

Stress on structural silicone should not exceed 20 psi (137 KPa) for a 6:1 safety factor.

Series 3150 offers a contact width of 7/16" (11.1)

NOTE: The maximum shorter span of glass may be the width or the height dimension
E.G. for 5' x 7' (1.52 m x 2.13 m) check 5' (1.52 m)
for 7' x 5' (2.13 m x 1.52 m) check 5' (1.52 m)

THESE LIMITATIONS ARE RELATED ONLY TO THE SILICONE JOINT CAPABILITY. ALUMINUM MEMBERS SHOULD ALSO BE CHECKED FOR WINDLOAD AND DEADLOAD.

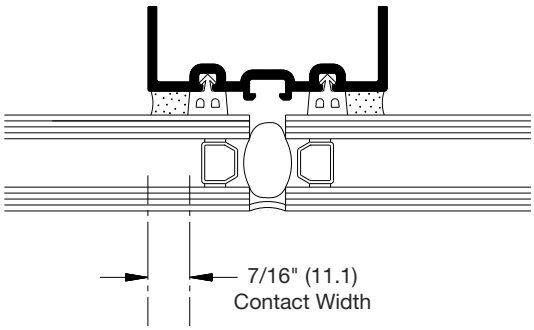

CURTAIN WALLS

Deadload Charts

Thermally Improved • Series 3150

HORIZONTAL MEMBERS FOR 1/4" (6) GLAZING

Deadload charts are based on 1/8" (3.2) maximum allowable deflection at the center point of the horizontal member and on a glass weight of 3.25 psf (15.87 Kg/m²)
Glass shall rest on two setting blocks located at:

CURVES **A**: 1/4 points
CURVES **B**: 1/8 points or 8" (203.2) from corners, whichever is larger

SHEAR BLOCK ASSEMBLY

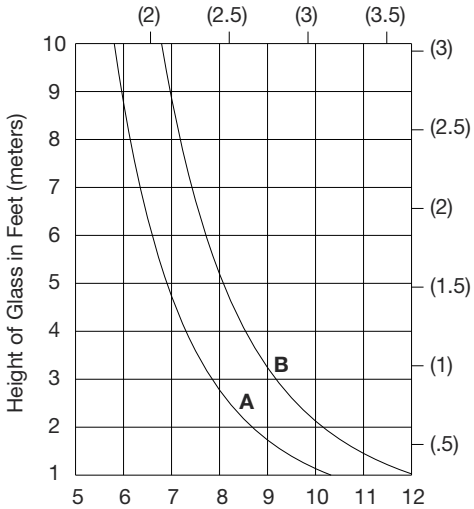

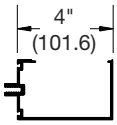

CW936
I_{yy} = .738 (30.72 x 10⁴)

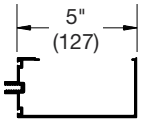

CW923
I_{yy} = .851 (35.42 x 10⁴)

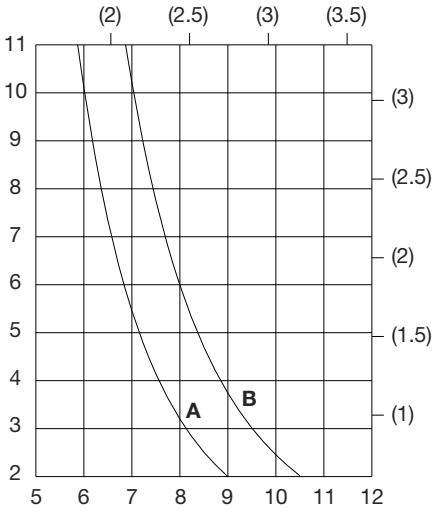

Mullion Span in Feet (meters)

PANEL ASSEMBLY

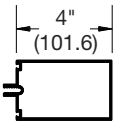

CW954
I_{yy} = 1.324 (55.11 x 10⁴)

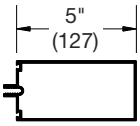

CW915
I_{yy} = 1.593 (66.31 x 10⁴)

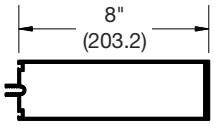

CW918
I_{yy} = 3.227 (134.32 x 10⁴)

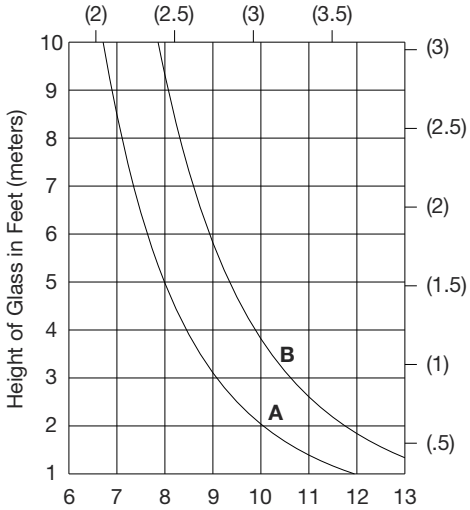

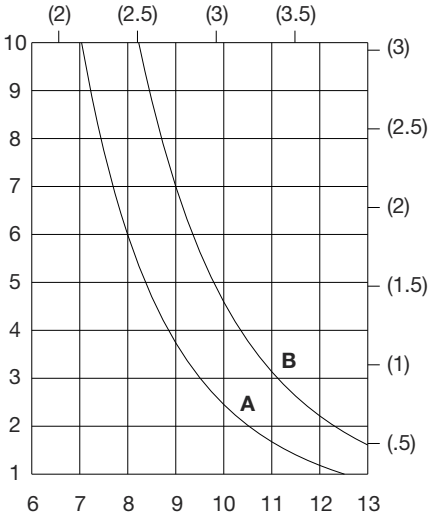

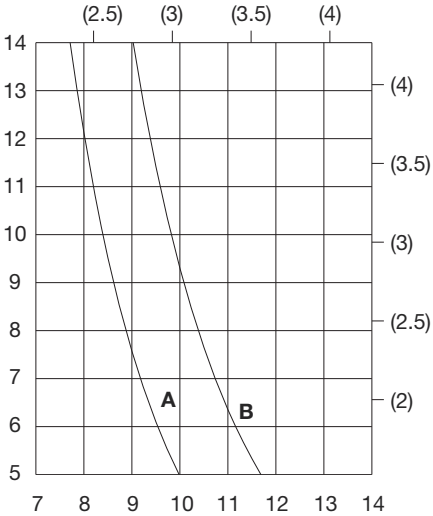

Mullion Span in Feet (meters)

CURTAIN WALLS

Deadload Charts

Thermally Improved • Series 3150

HORIZONTAL MEMBERS FOR 1" (25) GLAZING

Deadload charts are based on 1/8" (3.2) maximum allowable deflection at the center point of the horizontal member and on a glass weight of 6.5 psf (31.74 Kg/m²)

Glass shall rest on two setting blocks located at:

CURVES **A**: 1/4 points

CURVES **B**: 1/8 points or 8" (203.2) from corners, whichever is larger

SHEAR BLOCK ASSEMBLY

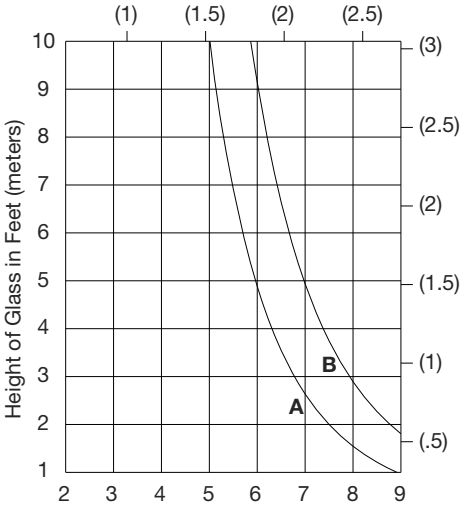

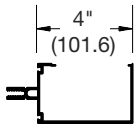

CW926

I_{yy} = .822 (34.21 x 10⁴)

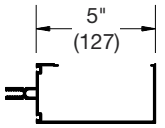

CW925

I_{yy} = .934 (38.88 x 10⁴)

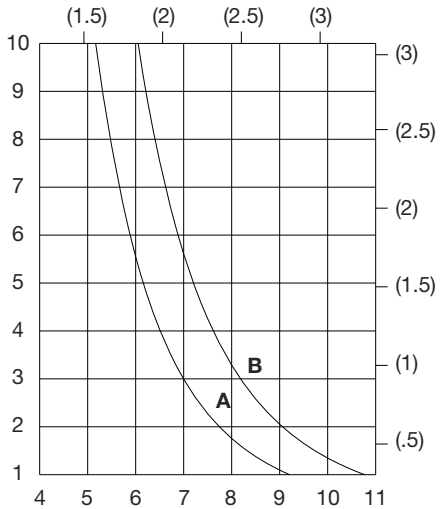

PANEL ASSEMBLY

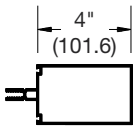

CW964

I_{yy} = 1.329 (55.32 x 10⁴)

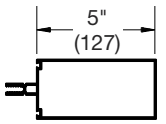

CW905

I_{yy} = 1.599 (66.56 x 10⁴)

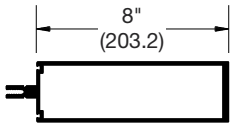

CW908

I_{yy} = 3.233 (134.57 x 10⁴)

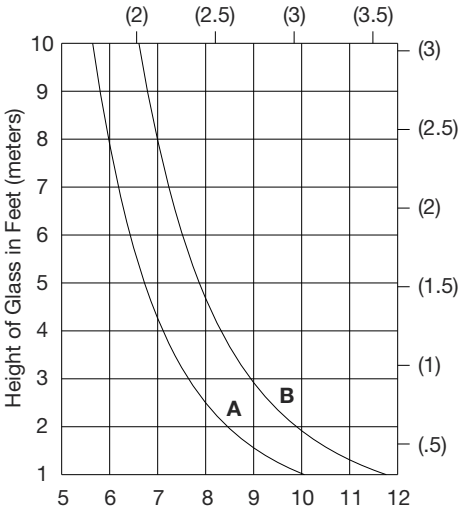

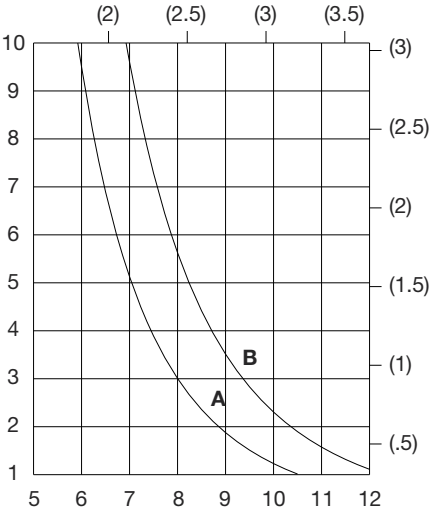

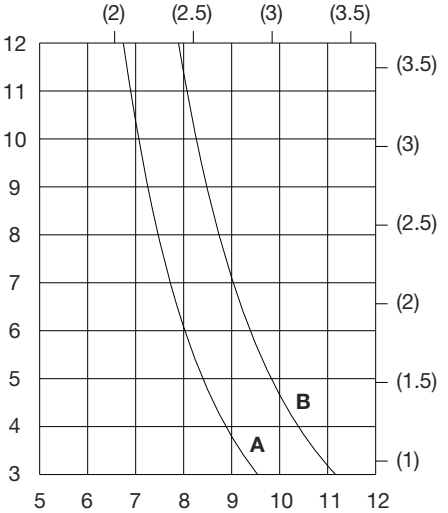

CRL U.S. ALUMINUM

CURTAIN WALLS

Accessories

Thermally Improved • Series 3150

FOR 1/4" (6) AND 1" (25) GLAZING

PART NO.	DETAIL	DESCRIPTION	PKG. QTY.	FOR MULLION DEPTHS		
				4" (101.6)	5" (127)	8" (203.2)
AP974	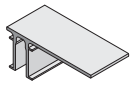	Wall Jamb Anchor at Head and Sill for CW954/CW964	6	●		
AP964	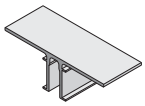	Intermediate Vertical Anchor at Head and Sill for CW954/CW964	12	●		
AP960	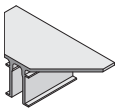	Outside 90 Degree Corner Anchor at Head and Sill for CW960	10	●		
AP994	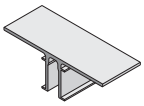	Intermediate Vertical Anchor at Head and Sill for CW934	12		●	
AP975	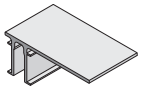	Wall Jamb Anchor at Head and Sill for CW915/CW905	6		●	
AP965	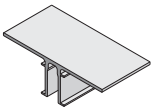	Intermediate Vertical Anchor at Head and Sill for CW915/CW905	12		●	
AP995	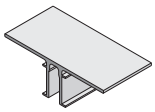	Intermediate Vertical Anchor at Head and Sill for CW935	12		●	
AP980	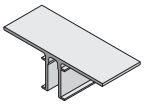	Inside 90 Degree Corner Anchor at Head and Sill for CW980 (Butt Glaze only)	10		●	
AP978	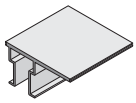	Wall Jamb Anchor at Head and Sill for CW918/CW908	6			●
AP968	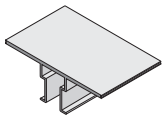	Intermediate Vertical Anchor at Head and Sill for CW918/CW908	12			●
AP998	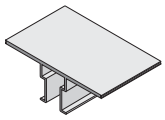	Intermediate Vertical Anchor at Head and Sill for CW974	12			●

CURTAIN WALLS

Accessories

Thermally Improved • Series 3150

J

FOR 1/4" (6) AND 1" (25) GLAZING

PART NO.	DETAIL	DESCRIPTION	PKG. QTY.	FOR MULLION DEPTHS		
				4" (101.6)	5" (127)	8" (203.2)
SL944	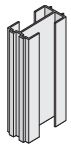	Mullion Splice Sleeve for CW954/CW964	12	●		
SL934	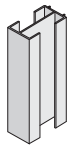	Mullion Splice Sleeve for CW934	12	●		
SL960	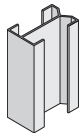	Outside 90 Degree Corner Mullion Splice Sleeve for CW960	5	●		
SL945	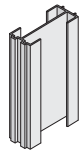	Mullion Splice Sleeve for CW915/CW905	12		●	
SL935	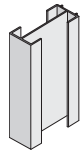	Mullion Splice Sleeve for CW935	12		●	
SL980	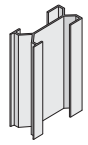	Inside 90 Degree Corner Mullion Splice Sleeve for CW980	5		●	
SL948	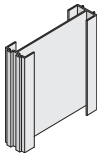	Mullion Splice Sleeve for CW918/CW908	12			●
SL974	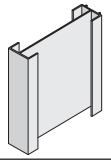	Mullion Splice Sleeve for CW974	12			●
DJ360	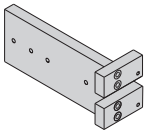	Drill Jig for Shear Block	1	●	●	●

CRL U.S. ALUMINUM

CURTAIN WALLS

Accessories

Thermally Improved • Series 3150

FOR 1/4" (6) AND 1" (25) GLAZING

PART NO.	DETAIL	DESCRIPTION	PKG. QTY.	FOR MULLION DEPTHS		
				4" (101.6)	5" (127)	8" (203.2)
AP954		Intermediate Shear Block for 4" Back Members (Includes screws)	20	●		
AP955	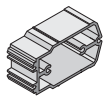	Intermediate Shear Block for 5" Back Members (Includes screws)	20		●	
AP928	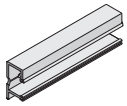	Intermediate Shear Block for 8" Back Members (Includes screws)	20			●
AC956	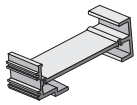	Intermediate Shear Block for 8" Open Back Members (Includes screws)	20			●
AP926	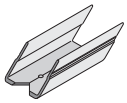	Corner Shear Block for Inside and Outside Corners (Includes screws)	20	●	●	●
HD973 HD975	HD973 for 1/4" (6) HD975 for 1" (25)	End Dam for Captured Mullions	50	●	●	●
WD925 WD900	WD925 for 1/4" (6) 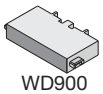 WD900 for 1" (25)	End Dam for Butt Glaze Mullions	50	●	●	●
CP925 CP900	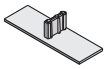 CP925 for 1/4" (6) 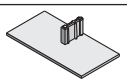 CP900 for 1" (25)	Closure Plate for Captured Mullions	50	●	●	●
CP950 CP951	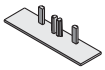 CP950 for 1/4" (6) 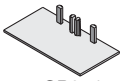 CP951 for 1" (25)	Closure Plate for Butt Glaze Mullions	50	●	●	●
CP952 CP953	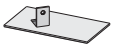 CP952 for 1/4" (6) 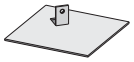 CP953 for 1" (25)	Closure Plate for Outside Corner	10	●	●	●
CP954	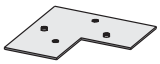	Closure Plate for Inside Corner	10	●	●	●
CW368	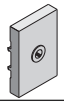	Temporary Glass Retainer for Captured Mullions	50	●	●	●
RG635	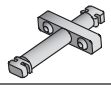	Temporary Glass Retainer for Butt Glaze Patent No. D295,952	50	●	●	●

CURTAIN WALLS

Accessories

Thermally Improved • Series 3150

J

FOR 1/4" (6) AND 1" (25) GLAZING

PART NO.	DETAIL	DESCRIPTION	PKG. QTY.	FOR MULLION DEPTHS		
				4" (101.6)	5" (127)	8" (203.2)
NP430		Exterior Gasket	250' Roll	●	●	●
NP420		Interior Gasket	250' Roll	●	●	●
SP450		Spacer Gasket for Butt Glaze	250' Roll	●	●	●
SB925	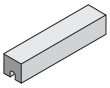	Setting Block for 1/4" (6) Glass; 4" (101.6) Long	100	●	●	●
AW900		1/4" (6) Glazing Edge Block; 2-1/2" (63.5) Long	50	●	●	●
SB910	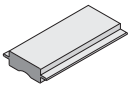	Setting Block for 1" (25) Glass; 4" (101.6) Long	100	●	●	●
AW901		1" (25) Glazing Edge Block; 2-1/2" (63.5) Long	100	●	●	●
MS222		Pressure Bar Screw 1/4"- 20 x 1" (25) HWHCS with SRG5	200	●	●	●
WD960 WD961	 WD960 for 1/4" (6) WD961 for 1" (25)	Water Deflector for Outside Corner	10	●	●	●
WD980 WD981	 WD980 for 1/4" (6) WD981 for 1" (25)	Water Deflector for Inside Corner	10	●	●	●
SS964	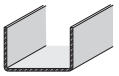	Steel Stiffener Fits in: CW954, CW934, and CW964	16' (4.88 m) Stock Length	●		
SS905	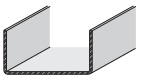	Steel Stiffener Fits in: CW915, CW935, and CW905	16' (4.88 m) Stock Length		●	
SS908	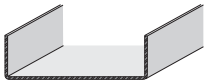	Steel Stiffener Fits in: CW918, CW974, and CW908	16' (4.88 m) Stock Length			●

CURTAIN WALLS

Table of Contents

Thermally Improved
• Series 3250

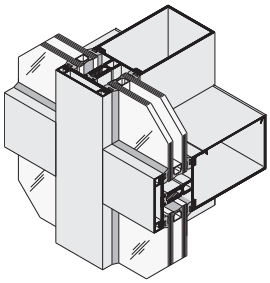

SERIES 3250
Captured Vertical
Glazed Curtain Wall

SECTION J3 PAGE

SPECIFICATIONS 02-J3
TECHNICAL DATA 03-J3
SPECIAL FEATURES 04-J3
TYPICAL DETAILS FOR 1/4" (6) GLAZING ..... 05-J3 thru 10-J3
TYPICAL DETAILS FOR 1" (25) GLAZING ..... 11-J3 thru 20-J3
WINDLOAD CHARTS ..... 21-J3 and 23-J3
DEADLOAD CHARTS ..... 24-J3 and 25-J3
ACCESSORIES ..... 26-J3 thru 29-J3

Project: Financial Corporate Center, Plano, TX

Due to the diversity in state/provincial, local, and federal laws and codes that govern the design and application of architectural products, it is the responsibility of the individual architect, owner, and installer to ensure that products selected for use on projects comply with all applicable building codes and laws. U.S. Aluminum exercises no control over the use or application of its products, glazing materials, and operating hardware, and assumes no responsibility thereof.

The rapidly changing technology within the architectural aluminum products industry demands that U.S. Aluminum reserve the right to revise, discontinue or change any product line, specification or electronic media without prior written notice.

NOTE: Dimensions in parentheses ( ) are millimeters unless otherwise noted.
Other metric units shown in this publication are:

m - meter	Kg - kilogram
Pa - pascal	KPa - kilopascal
MPa - megapascal	

CURTAIN WALLS

Specifications

Thermally Improved • Series 3250

SECTION 08 44 13 ALUMINUM CURTAIN WALL SYSTEMS

SERIES	FACE WIDTH	BACK MEMBER DEPTH	OVERALL DEPTH	GLAZING INFILL	GLAZING METHOD
3250	2-1/2" (63.5)	4" (101.6) 5" (127) 8" (203.2)	5-1/4" (133.4) 6-1/4" (158.8) 9-1/4" (235)	1/4" (6)	Exterior
		4" (101.6) 5" (127) 8" (203.2)	6" (152.4) 7" (177.8) 10" (254)	1" (25)	

I. GENERAL DESCRIPTION

Work Included: Furnish all necessary materials, labor, and equipment for the complete installation of aluminum framing as shown on the drawings and specified herein.
Work Not Included: Structural support of the framing system, interior closures, and trim. (*Specifier list other exclusions*).
Related Work Specified Elsewhere: (*Specifier list*).

QUALITY ASSURANCE

Drawings and specifications are based on the Series 3250 Curtain Wall System as manufactured by U.S. Aluminum. Whenever substitute products are to be considered, supporting technical literature, samples, drawings, and performance data must be submitted 10 days prior to bid in order to make a valid comparison of the products involved.

PERFORMANCE REQUIREMENTS

Air Infiltration: shall be tested in accordance with ASTM E 283. Infiltration shall not exceed .06 CFM per square foot (.0003m^3/sm^2) fixed area when tested at 6.24 psf (300 Pa).
Water Infiltration: shall be tested in accordance with ASTM E 331.
No water penetration at test pressure of 15 psf (718 Pa).
Structural Performance: shall be tested in accordance with ASTM E 330 and based on:

- Maximum deflection of L/175 of the span
- Allowable stress with a safety factor of 1.65

The system shall perform to this criteria under a windload of (Specify) psf
System shall exceed maximum seismic lateral displacement requirements specified in section 1628.8.2 of the Uniform Building Code, 1994 edition. Upon successful completion of the Phase I seismic testing, the curtain wall shall once again be subjected to, and must successfully pass the air and water infiltration tests specified above before proceeding to Phase II testing.
Thermal Performance: Series 3250 Curtain Wall shall be tested in accordance with AAMA 1503, and NFRC-100.
Testing Procedures: ASTM 283, E 331, and E 330 - Laboratory performance testing. AAMA 503-08 - Newly installed curtain walls. AAMA 511-08 - Installed curtain walls after six months.

II. PRODUCTS MATERIALS

Extrusions shall be 6063-T5 alloy and temper (ASTM B221 alloy T5 temper). Fasteners, where exposed, shall be aluminum, stainless steel or zinc plated steel in accordance with ASTM A 164. Perimeter anchors shall be aluminum or steel, providing the steel is properly isolated from the aluminum. Glazing gaskets shall be E.P.D.M. elastomeric extrusions.

FINISH

All exposed framing surfaces shall be free of scratches and other serious blemishes. Aluminum extrusions shall be given a caustic etch followed by an anodic oxide treatment to obtain...
(Specify one of the following):
_____#11 Clear anodic coating
_____#22 Dark Bronze anodic coating
_____#33 Black anodic coating
A Fluoropolymer paint coating conforming with the requirements of AAMA 2605. Color shall be (*Specify a U.S. Aluminum standard color*).

FABRICATION

All mullions and horizontals shall have flexible (PVC) thermal break material located on exterior side of glass plane. Exterior glazing seal gasket shall be secured by extruded aluminum pressure plates fastened to main grid members. Provisions shall be made at all sealed horizontals to weep moisture accumulation to the exterior. A cover shall be snapped over pressure plate to show only a sharp, uninterrupted exterior profile. Framing members shall provide for straight-in glazing on all sides, with through sight lines and no projecting stops or face joints. Vertical and horizontal framing members shall have a nominal width of 2-1/2" (63.5). Overall depth of system shall be (*Specify*). System shall provide for two piece horizontal framing so that all fasteners at intersection of horizontal and vertical members will be concealed.

III. EXECUTION INSTALLATION

All glass framing shall be set in correct locations as shown in the details and shall be level, square, plumb, and in alignment with other work in accordance with the manufacturer's installation instructions and approved shop drawings. All joints between framing and the building structure shall be sealed in order to secure a watertight installation.

PROTECTION AND CLEANING

After installation the General Contractor shall adequately protect exposed portions of aluminum surfaces from damage by grinding and polishing compounds, plaster, lime, acid, cement or other contaminants. The General Contractor shall be responsible for final cleaning.

CURTAIN WALLS

Technical Data

Thermally Improved • Series 3250

Strength, versatility, and economics make Series 3250 Curtain Wall an industry favorite for low to mid-rise applications where exterior glazing is desired. Complementing the efficiency of insulated glass, Series 3250 is Thermally Improved by a continuous thermal spacer interlocked with the horizontal and vertical pressure plates. Dual colors can be achieved by specifying different finishes for the exterior face covers and interior mullions. Two piece horizontals and die cast shear blocks allow for a concealed horizontal to vertical joinery without exposed screws. These joint intersections also have Concealed Injection Molded End Dams for controlling any infiltrated water. Various depth mullions are shown below for accommodating single and multi-span structural loads.

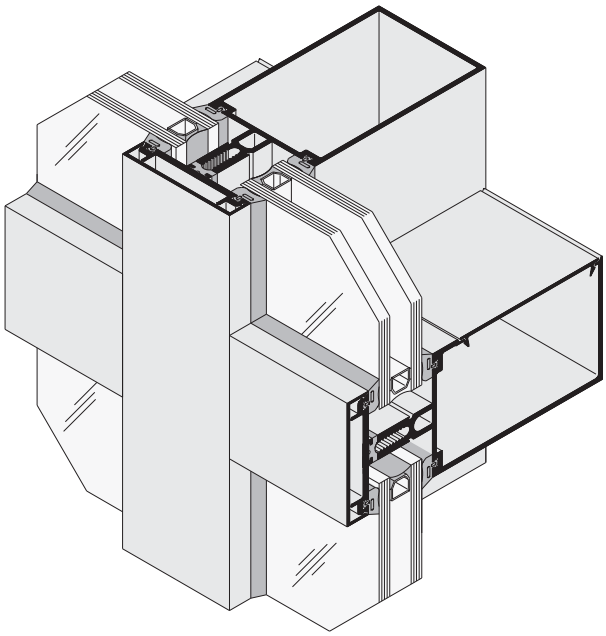

SERIES 3250
Captured Vertical Glazed Curtain Wall

SERIES	WIDTH	DEPTH	GLAZING INFILL	APPLICATIONS
3250	2-1/2" (63.5)	5-1/4" (133.4) 6-1/4" (158.8) 9-1/4" (235)	1/4" (6)	Low-Rise to Mid-Rise Buildings Where Exterior Glazing is Desired.
	2-1/2" (63.5)	6" (152.4) 7" (177.8) 10" (254)	1" (25)	

GLASS SIZES*	
Glass Width and Height	= Daylight Opening + 1" (25.4)

* These formulae do not take into account glass tolerances. Consult glass manufacturer before ordering glass.

CURTAIN WALLS

Special Features

Thermally Improved • Series 3250

Install Injection Molded Closure Plates at top and bottom of verticals to ensure a continuous perimeter seal.

Slide top and bottom "T" Anchors into vertical members. Install verticals plumb and level. Secure top and bottom "T" Anchors to structure. See page 26-J3 for additional information.

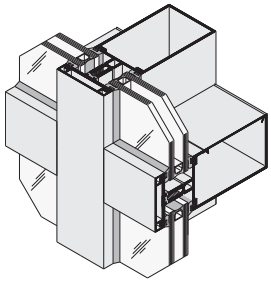

Captured Vertical Glazed Curtain Wall

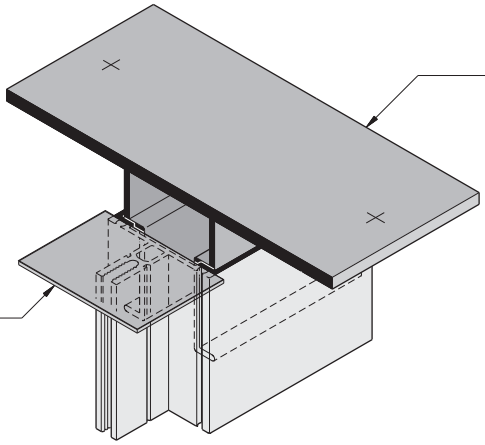

Injection Molded End Dams are for controlling any infiltrated water. Apply sealant to three contact sides of end dams and slide between vertical and horizontal joint as shown. See page 28-J3 for additional information

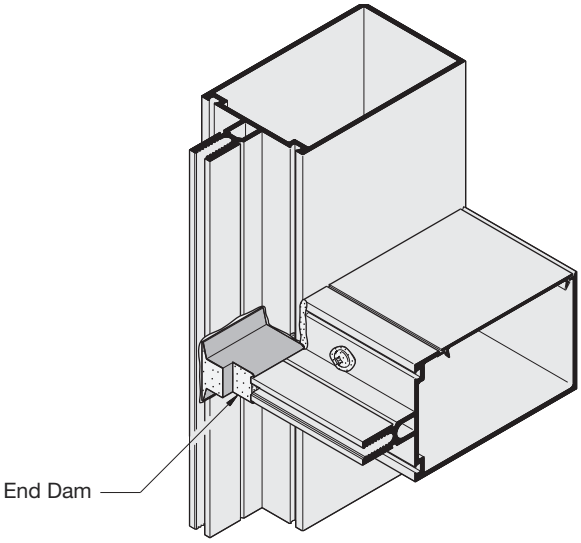

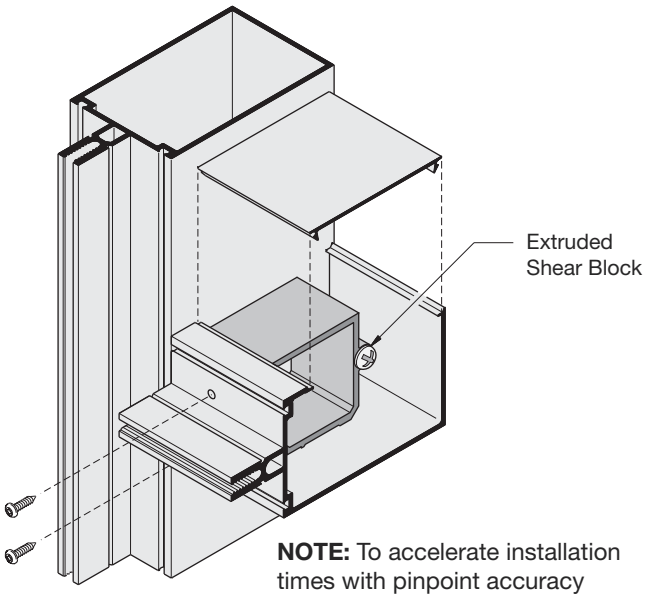

Extruded Aluminum Shear Blocks are furnished to ensure extra strong horizontal to vertical joinery. Attach shear blocks to verticals and horizontals to shear blocks with screws provided. See page 28-J3 for additional information.

NOTE: To accelerate installation times with pinpoint accuracy of Horizontal Shear Blocks to Curtain Wall Mullions see pages 56-P1 and 57-P1.

CURTAIN WALLS

Typical Details

Thermally Improved • Series 3250

VERTICAL MULLIONS FOR 1/4" (6) GLAZING

NOTE: Part numbers shown are available in 24' (7.3 m) stock lengths. Visit **usalum.com** for more information.

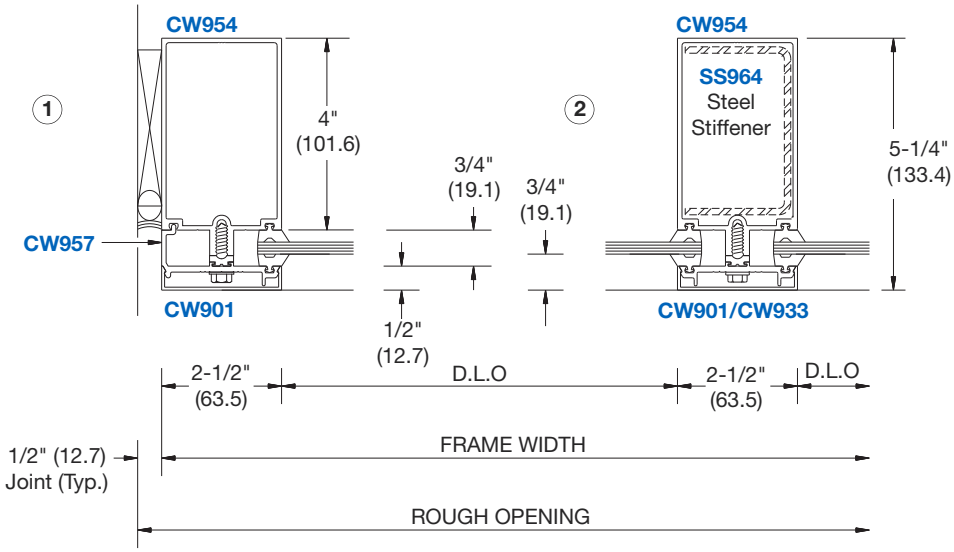

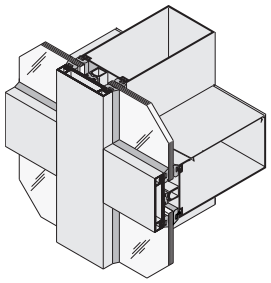

Captured Vertical Glazed Curtain Wall

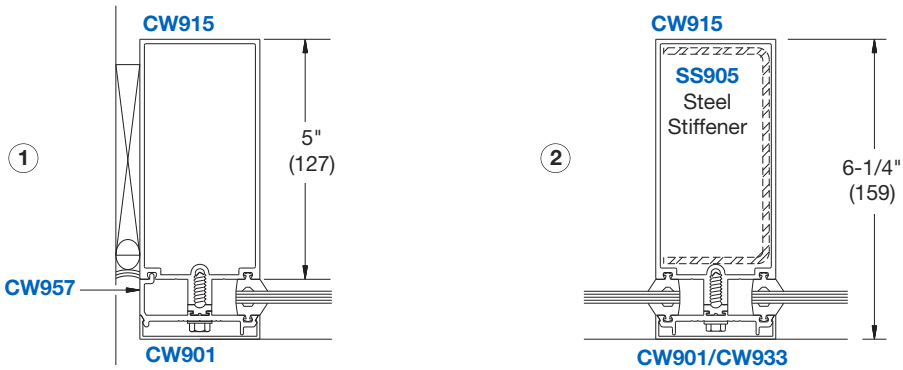

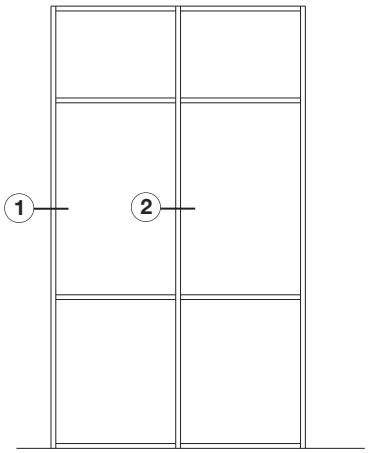

TYPICAL ELEVATION

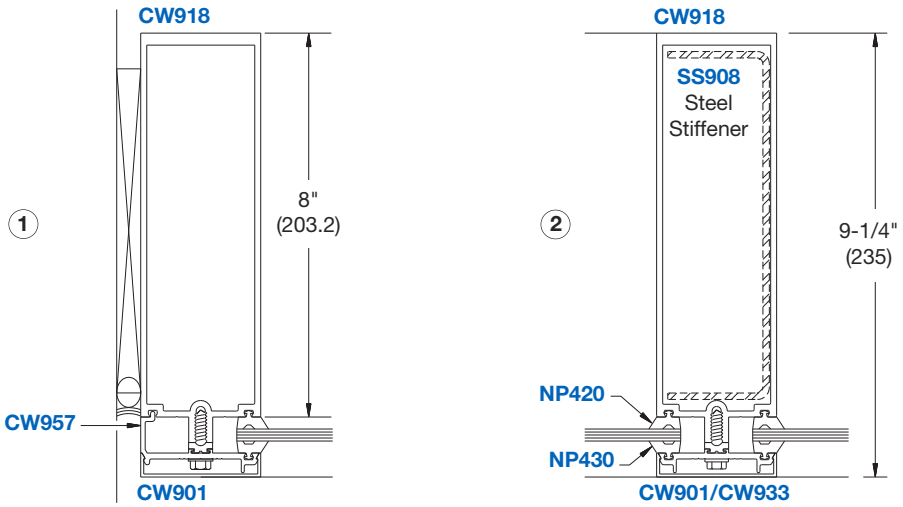

NOT TO SCALE

CURTAIN WALLS

Typical Details

Thermally Improved • Series 3250

OPEN BACK HORIZONTAL MULLIONS FOR 1/4" (6) GLAZING

NOTE: Part numbers shown are available in 24' (7.3 m) stock lengths. Visit **usalum.com** for more information.

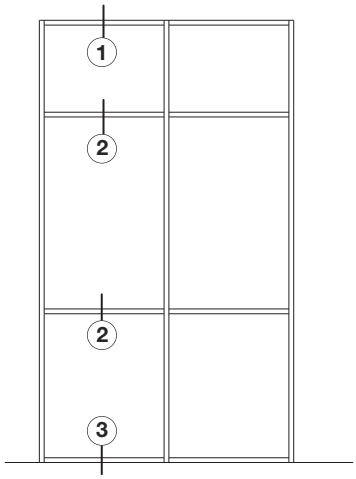

TYPICAL ELEVATION

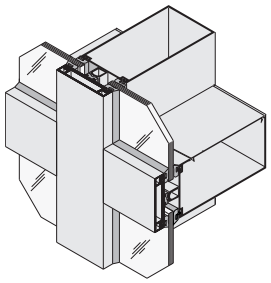

Captured Vertical Glazed Curtain Wall

NOTE: Open Back Side of Top and Intermediate Horizontals are Always Up as Shown. The Open Back is Down at The Bottom Horizontal Only.

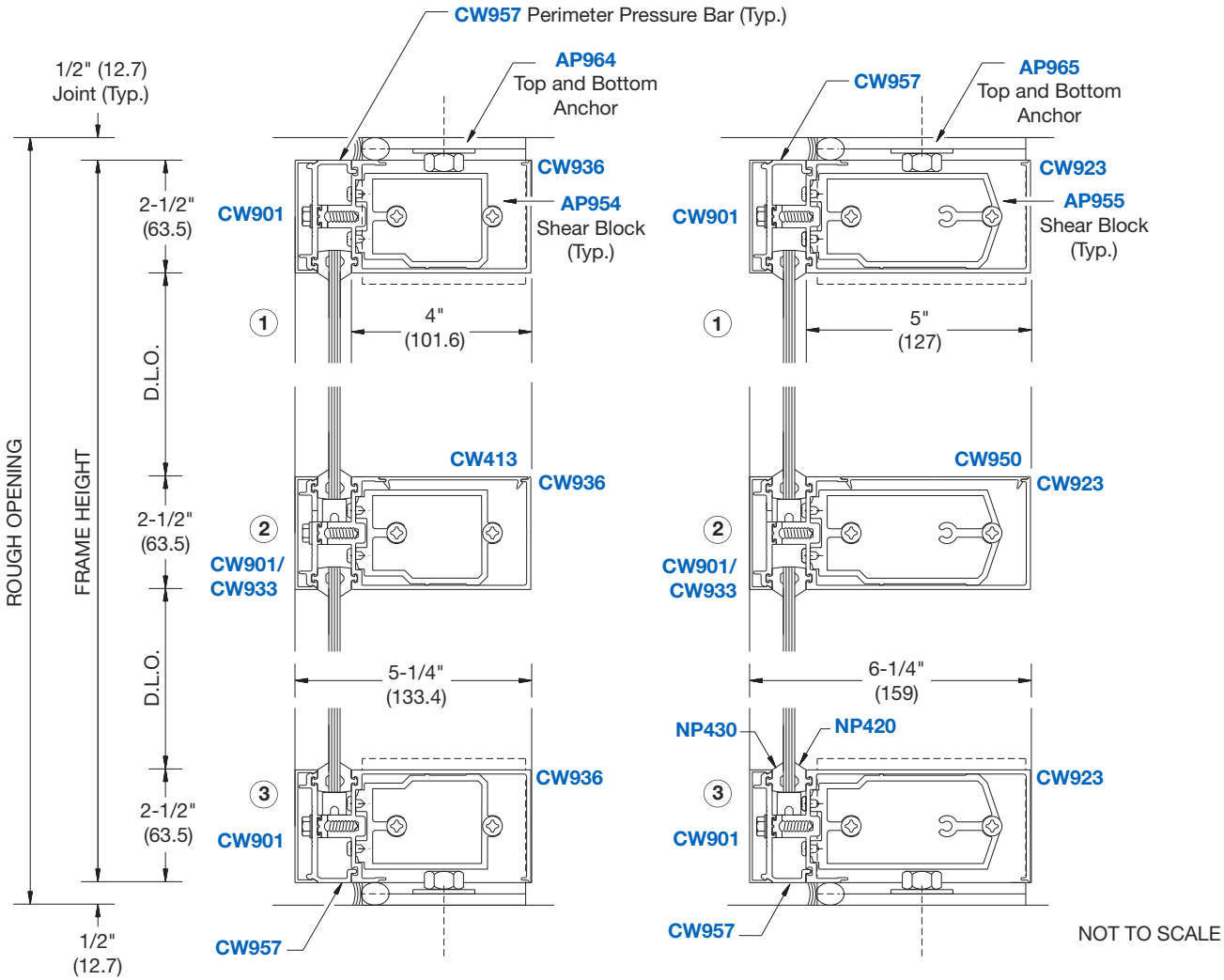

CURTAIN WALLS

Typical Details

Thermally Improved • Series 3250

TUBULAR HORIZONTAL MULLIONS FOR 1/4" (6) GLAZING

NOTE: Part numbers shown are available in 24' (7.3 m) stock lengths. Visit **usalum.com** for more information.

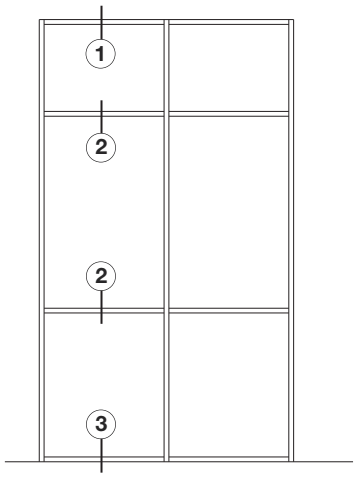

TYPICAL ELEVATION

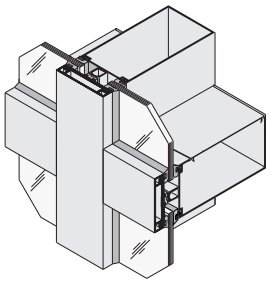

Captured Vertical Glazed Curtain Wall

NOTE: Open Back Side of Top and Intermediate Horizontals are Always Up as Shown. The Open Back is Down at The Bottom Horizontal Only.

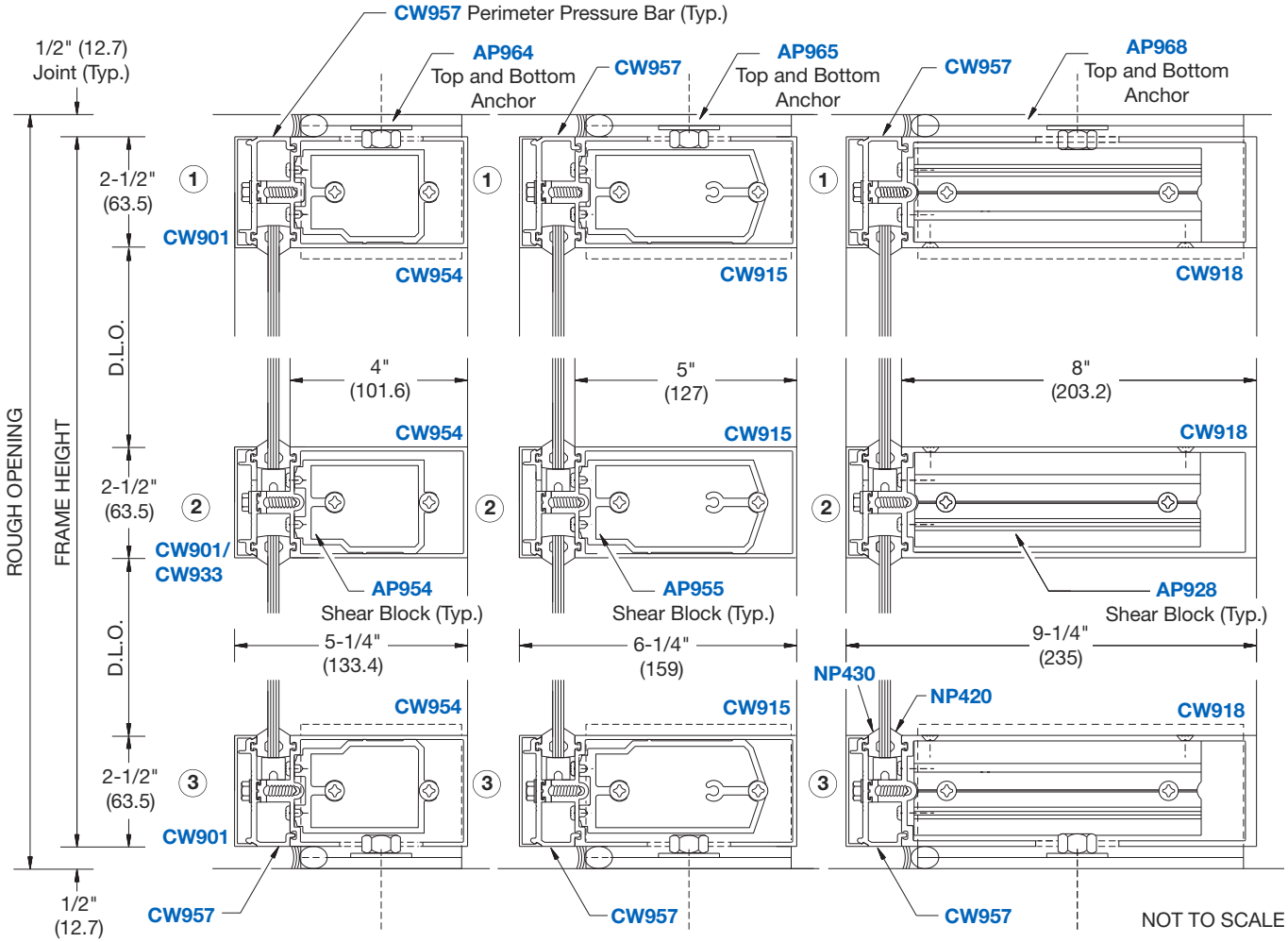

CURTAIN WALLS

Typical Details

Thermally Improved • Series 3250

90 DEGREE CORNER CONDITIONS FOR 1/4" (6) GLAZING

NOTE: Part numbers shown are available in 24' (7.3 m) stock lengths. Visit **usalum.com** for more information.

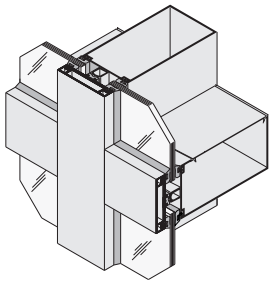

Captured Vertical Glazed Curtain Wall

NOTE: Extruded Single Mullion Outside Corners are Not Available for 8" (203.2) Back Members.

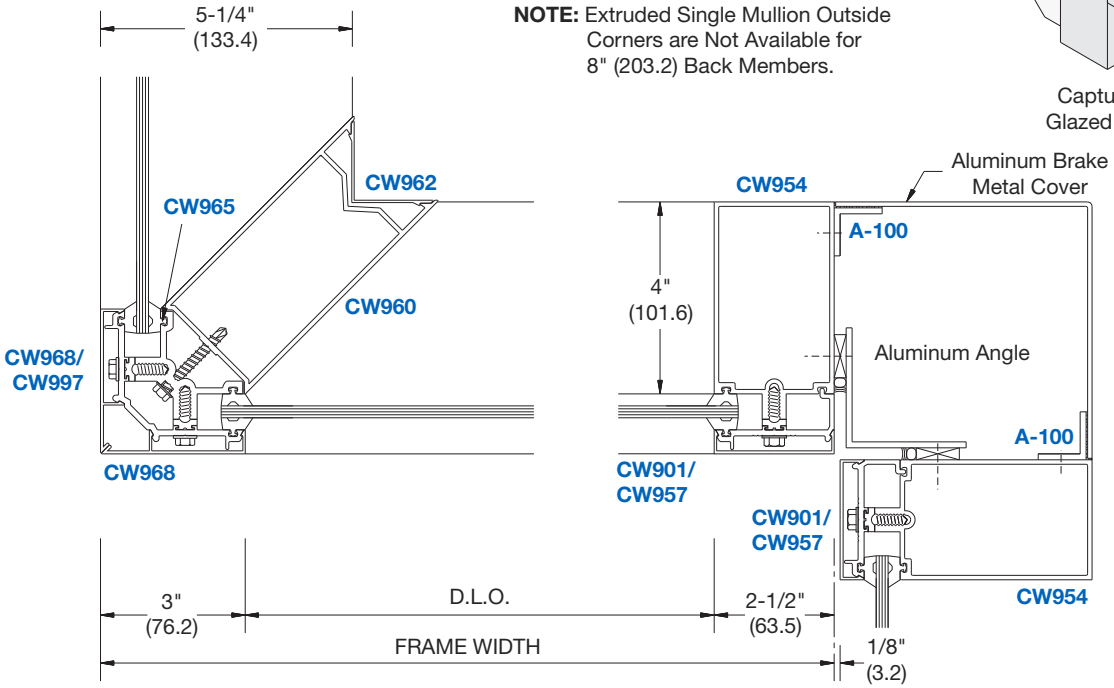

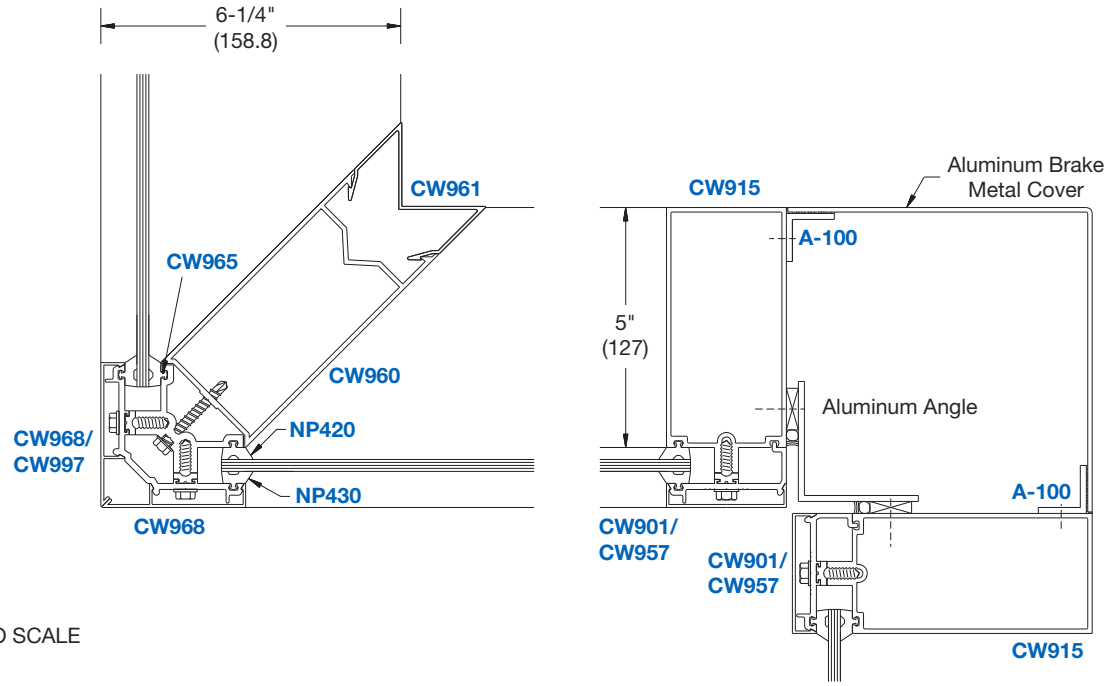

NOT TO SCALE

CURTAIN WALLS

Typical Details

Thermally Improved • Series 3250

DOOR FRAMING - 1/4" (6) GLAZING

NOTE: 4" (101.6) Back Members Shown; 5" (127) and 8" (203.2) Members Shown in Parentheses.

NOTE: Doors are available in stock to accommodate 36" x 84" (914 x 2134) and 72" x 84" (1829 x 2134) door openings. Visit **usalum.com** for more information.

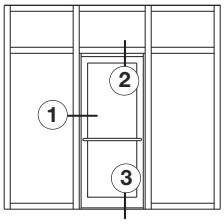

CENTER HUNG DOOR

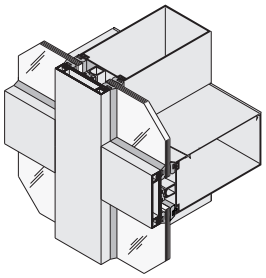

Captured Vertical Glazed Curtain Wall

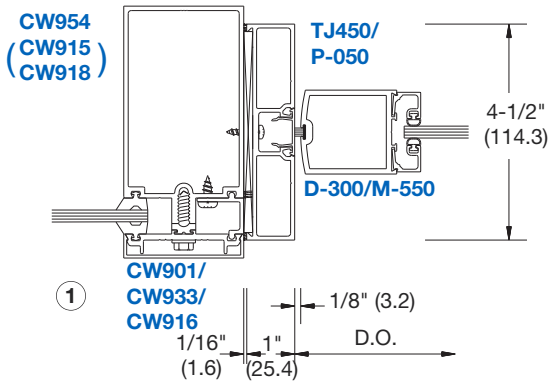

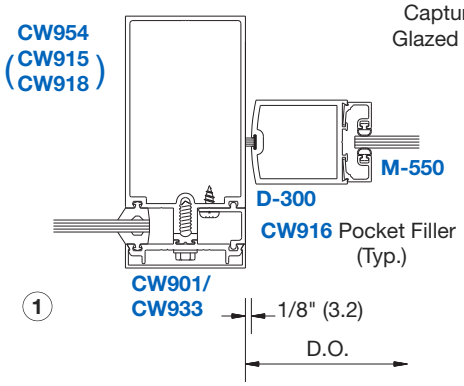

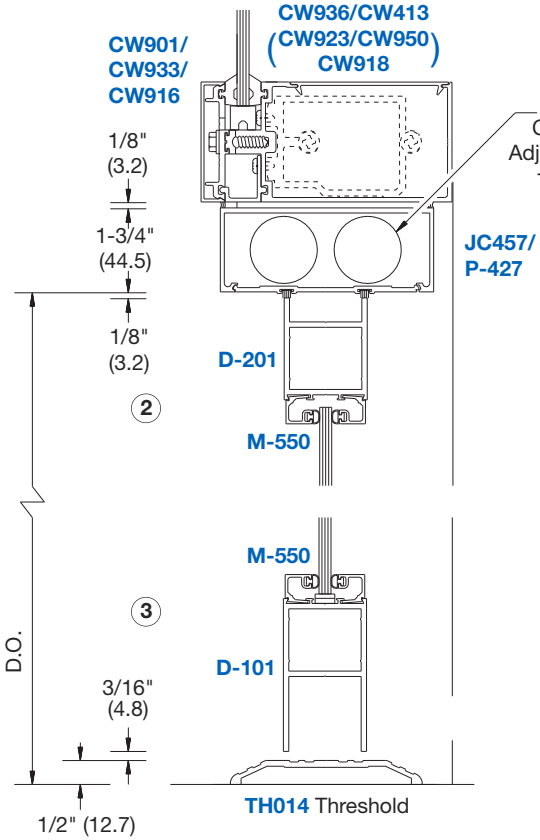

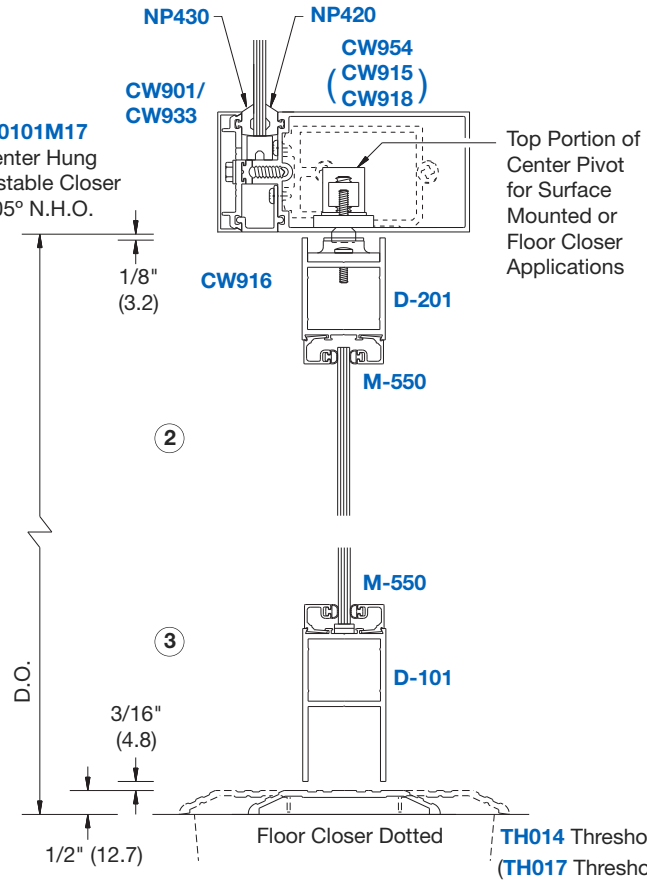

NOT TO SCALE

CURTAIN WALLS

Typical Details

Thermally Improved • Series 3250

DOOR FRAMING - 1/4" (6) GLAZING

NOTE: 4" (101.6) Back Members Shown; 5" (127) and 8" (203.2) Members Shown in Parentheses.

NOTE: Doors are available in stock to accommodate 36" x 84" (914 x 2134) and 72" x 84" (1829 x 2134) door openings. Visit **usalum.com** for more information.

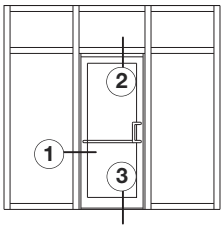

OFFSET HUNG DOOR

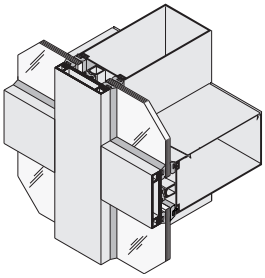

Captured Vertical Glazed Curtain Wall

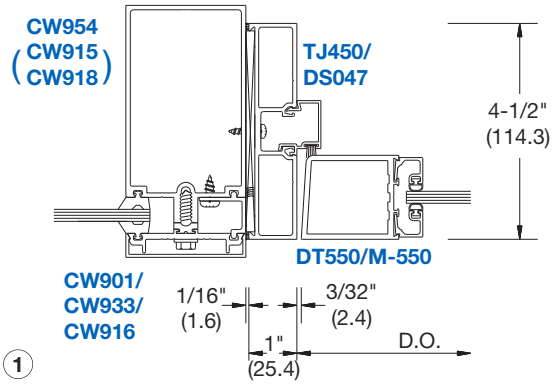

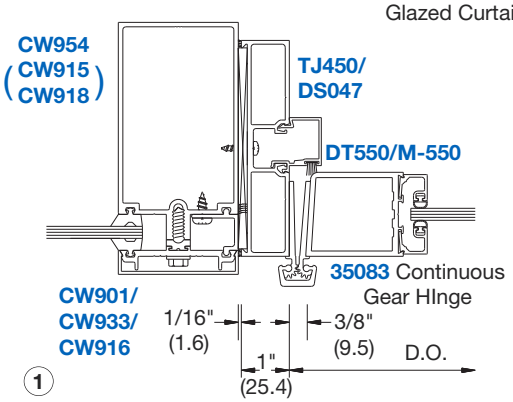

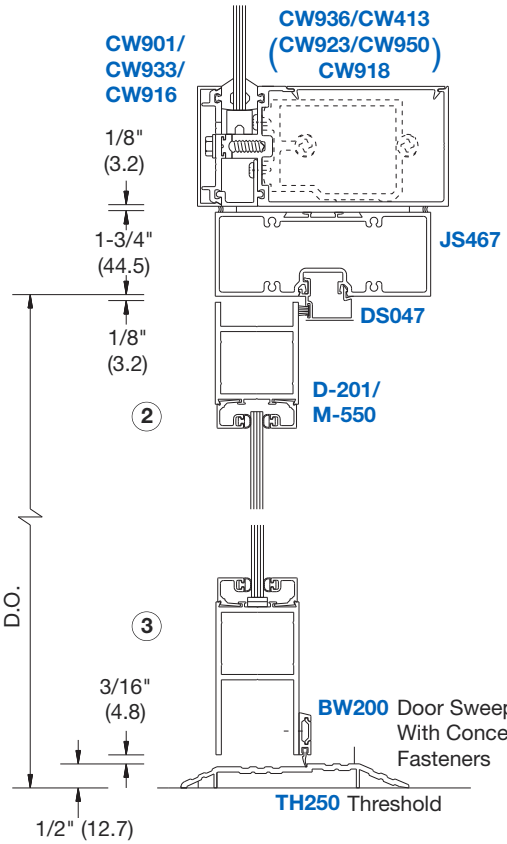

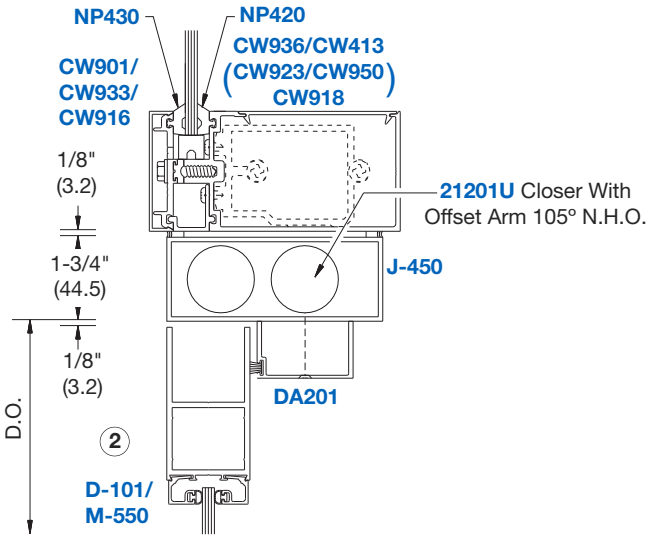

NOT TO SCALE

CURTAIN WALLS

Typical Details

Thermally Improved • Series 3250

VERTICAL MULLIONS FOR 1" (25) GLAZING

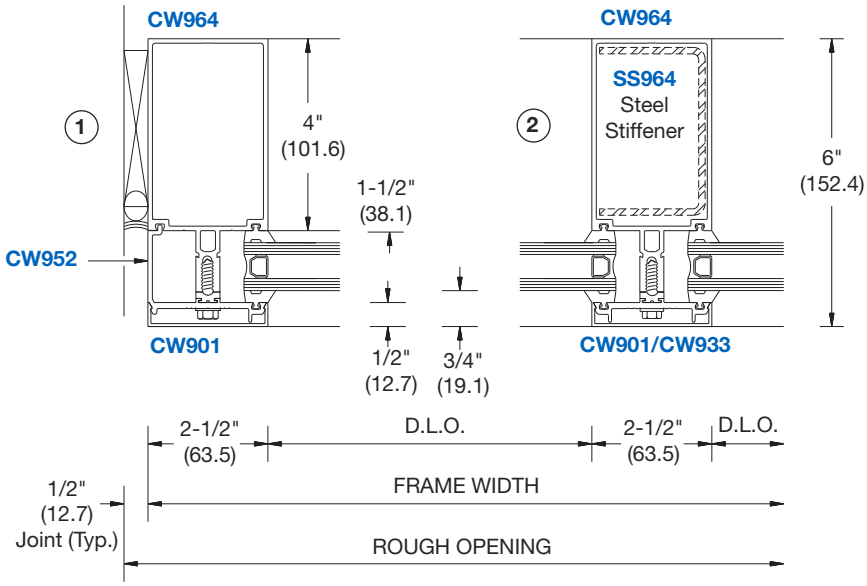

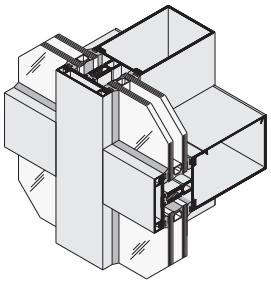

Captured Vertical Glazed Curtain Wall

NOTE: Part numbers shown are available in 24' (7.3 m) stock lengths. Visit **usalum.com** for more information.

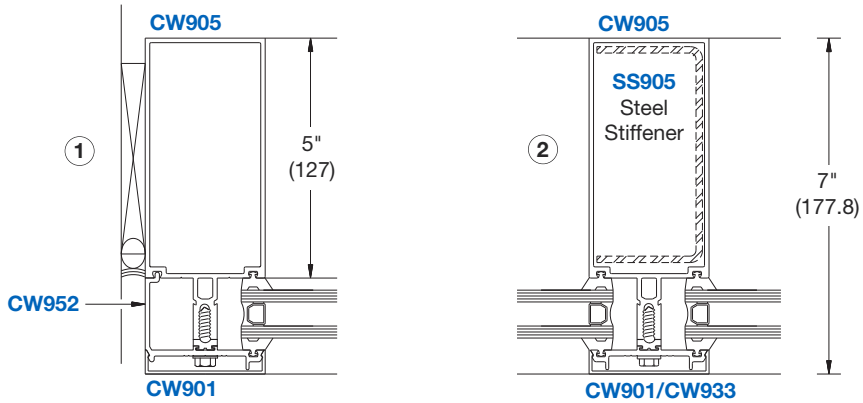

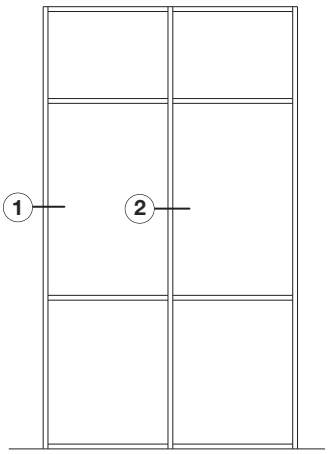

TYPICAL ELEVATION

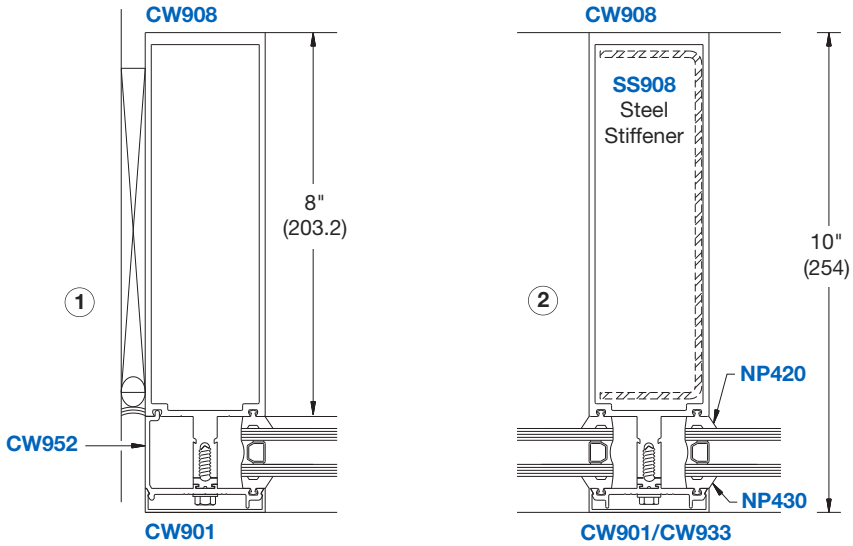

NOT TO SCALE

CURTAIN WALLS

Typical Details

Thermally Improved • Series 3250

OPEN BACK HORIZONTAL MULLIONS FOR 1" (25) GLAZING

NOTE: Part numbers shown are available in 24' (7.3 m) stock lengths. Visit usalum.com for more information.

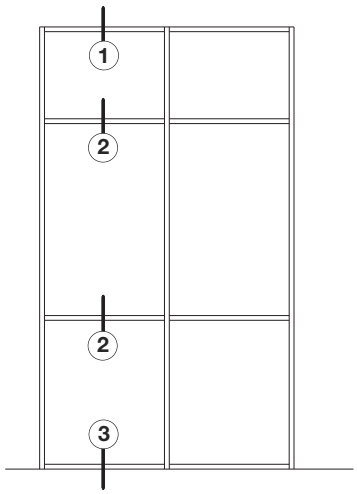

TYPICAL ELEVATION

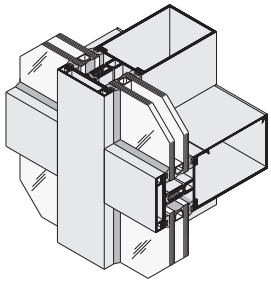

Captured Vertical Glazed Curtain Wall

NOTE: Open Back Side of Top and Intermediate Horizontals are Shown. The Open Back is Down at the Bottom Horizontal Only.

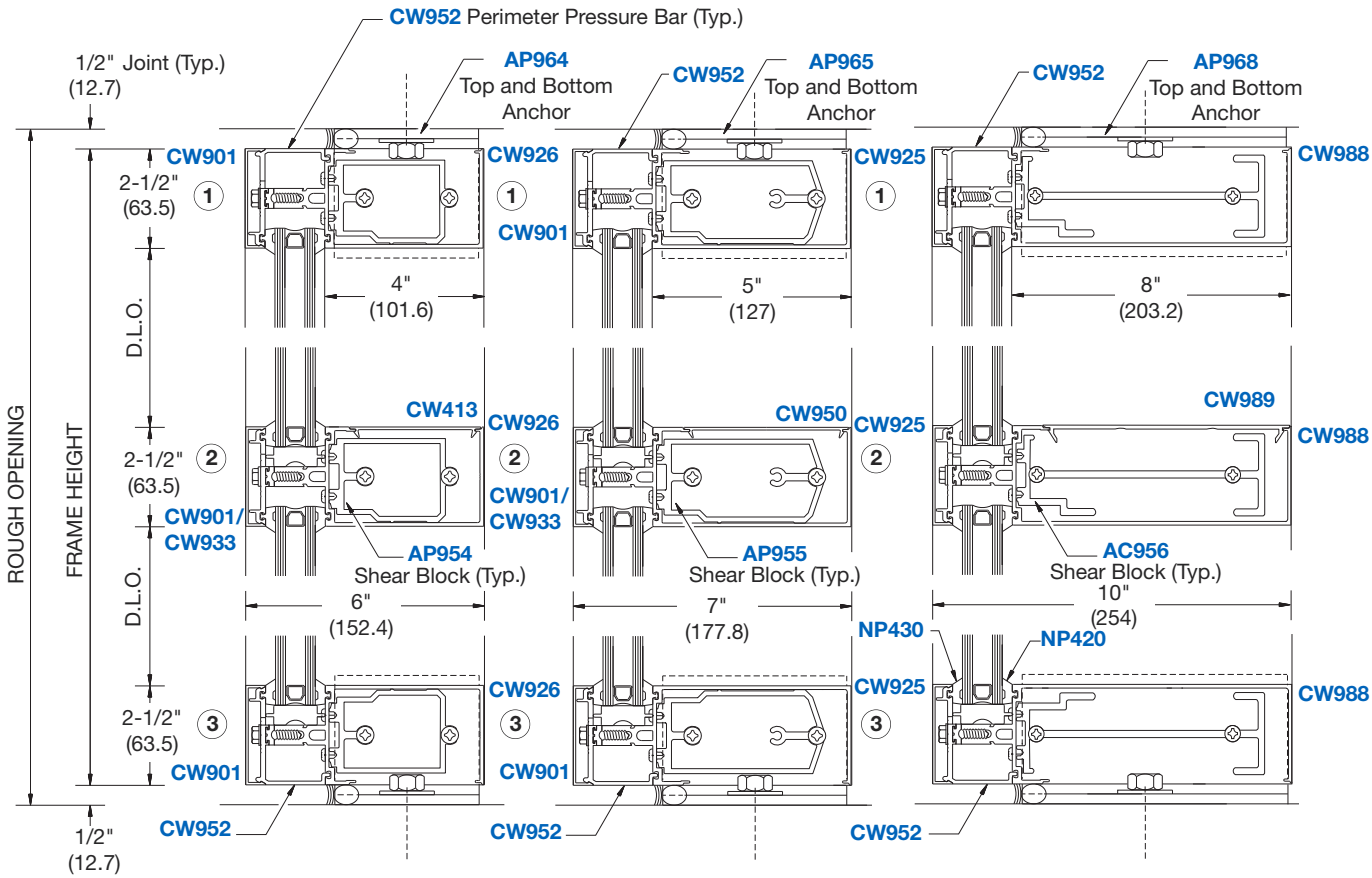

NOT TO SCALE

CURTAIN WALLS

Typical Details

Thermally Improved • Series 3250

TUBULAR HORIZONTAL MULLIONS FOR 1" (25) GLAZING

NOTE: Part numbers shown are available in 24' (7.3 m) stock lengths. Visit **usalum.com** for more information.

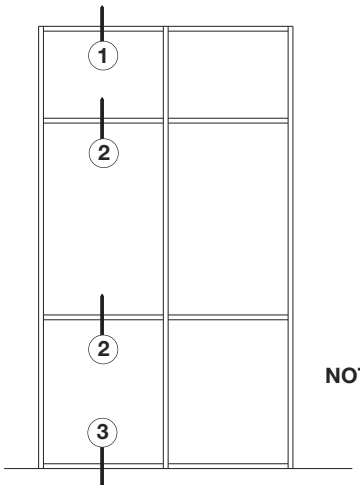

TYPICAL ELEVATION

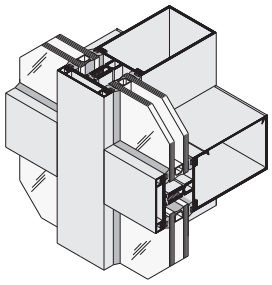

Captured Vertical Glazed Curtain Wall

NOTE: Tubular Horizontals Must be Used When Span Exceeds 6'0" (1.83 m) or if Deadload Exceeds 250 lbs. (113.4 Kg).

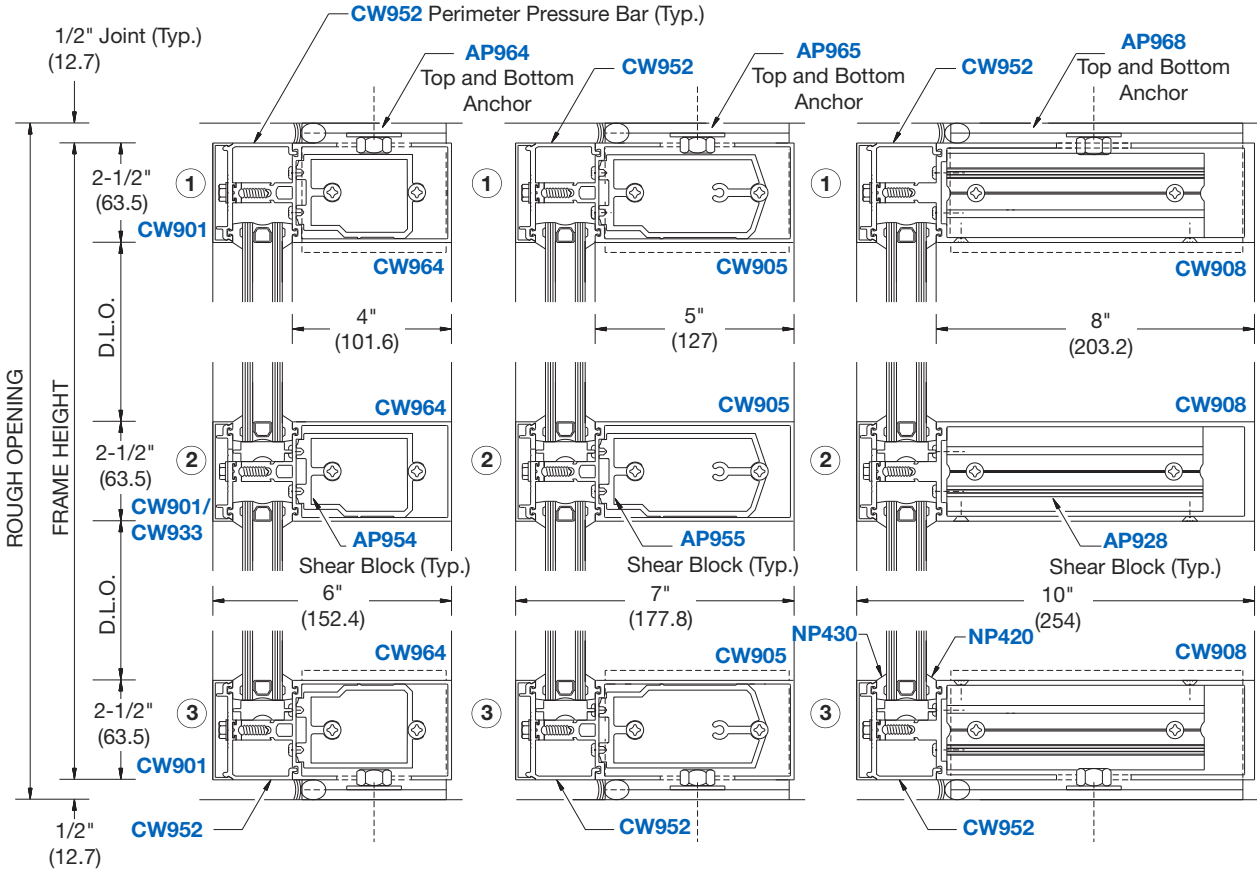

NOT TO SCALE

CURTAIN WALLS

Typical Details

Thermally Improved • Series 3250

90 DEGREE CORNER CONDITIONS FOR 1" (25) GLAZING

NOTE: Part numbers shown are available in 24' (7.3 m) stock lengths. Visit **usalum.com** for more information.

NOTE: Extruded Single Mullion Outside Corners are Not Available for 8" (203.2) Back Members

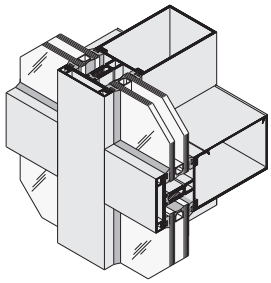

Captured Vertical Glazed Curtain Wall

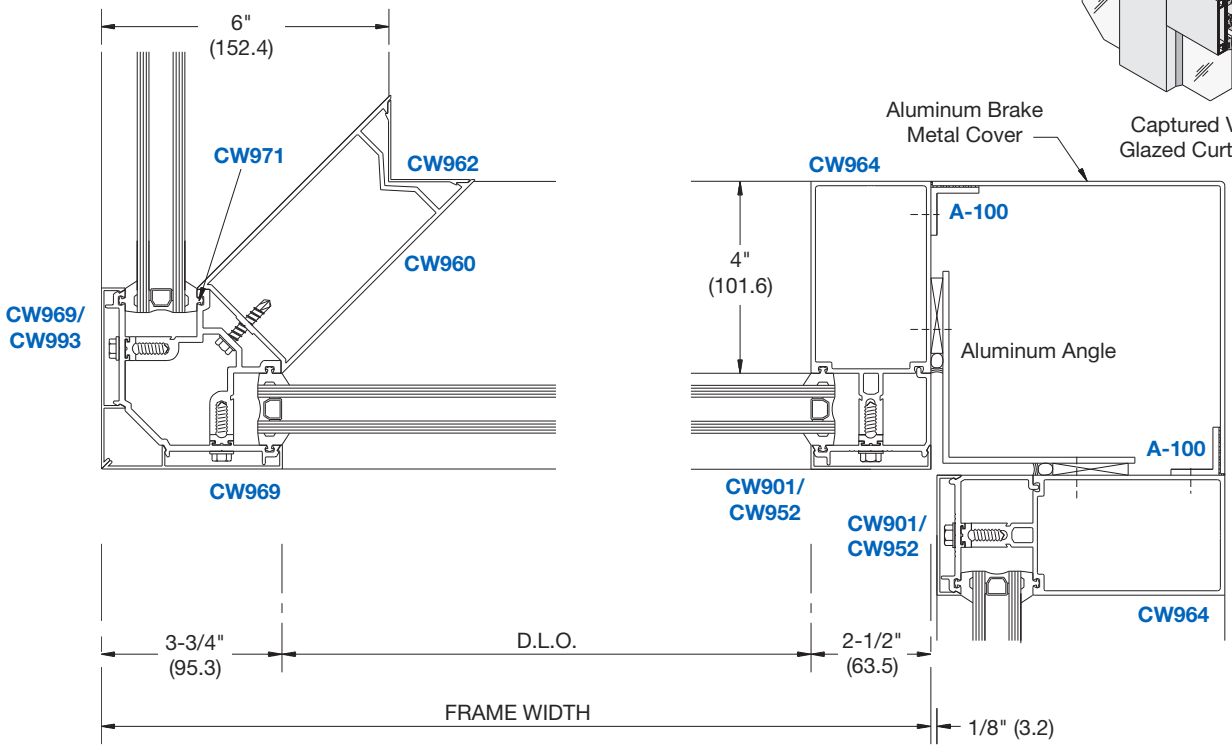

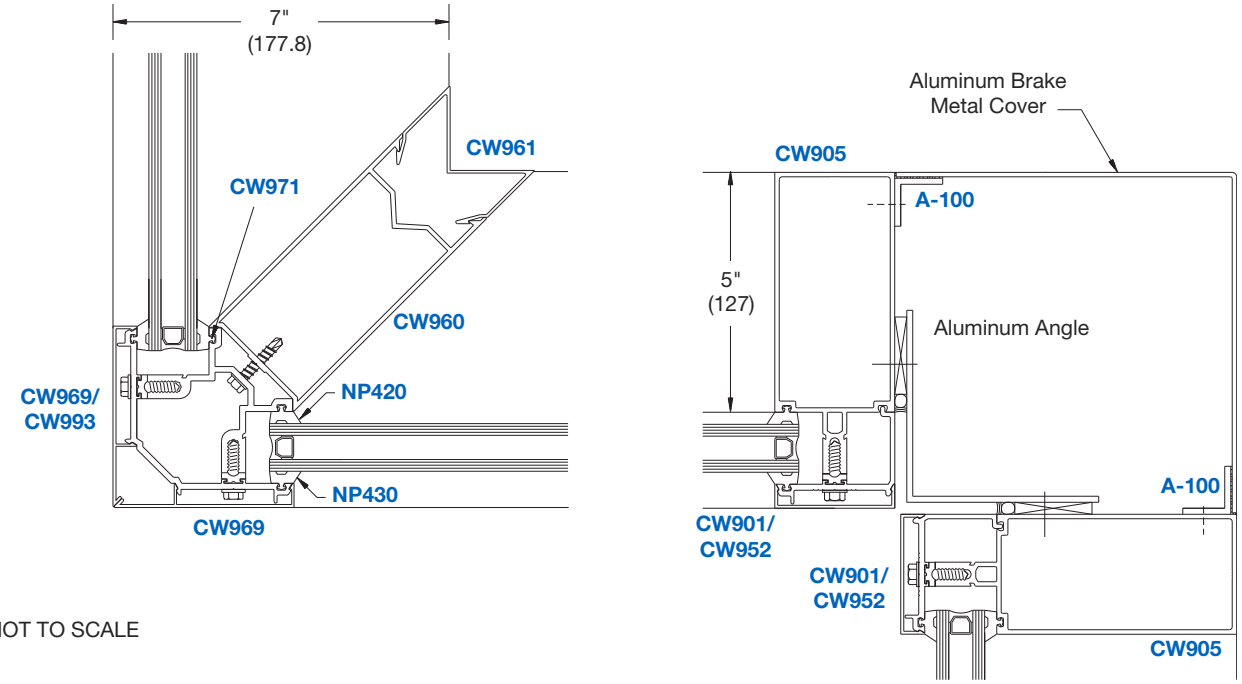

NOT TO SCALE

CURTAIN WALLS

Typical Details

Thermally Improved • Series 3250

1" (25) TO 1/4" (6) TRANSITION GLAZING

NOTE: 4" (101.6) Back Members Shown; 5" (127) and 8" (203.2) Members Similar. Extruded Single Mullion Corners are Not Available for 8" (203.2) Back Members

NOTE: Part numbers shown are available in 24' (7.3 m) stock lengths. Visit **usalum.com** for more information.

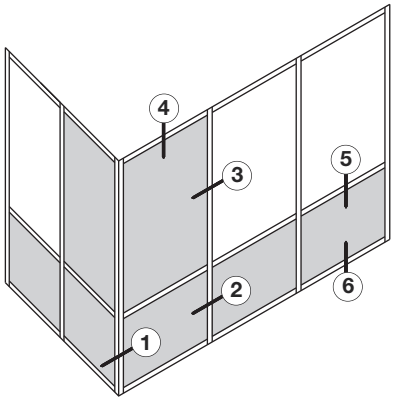

TYPICAL ELEVATION

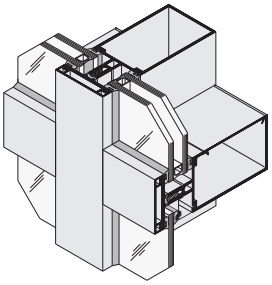

Captured Vertical Glazed Curtain Wall

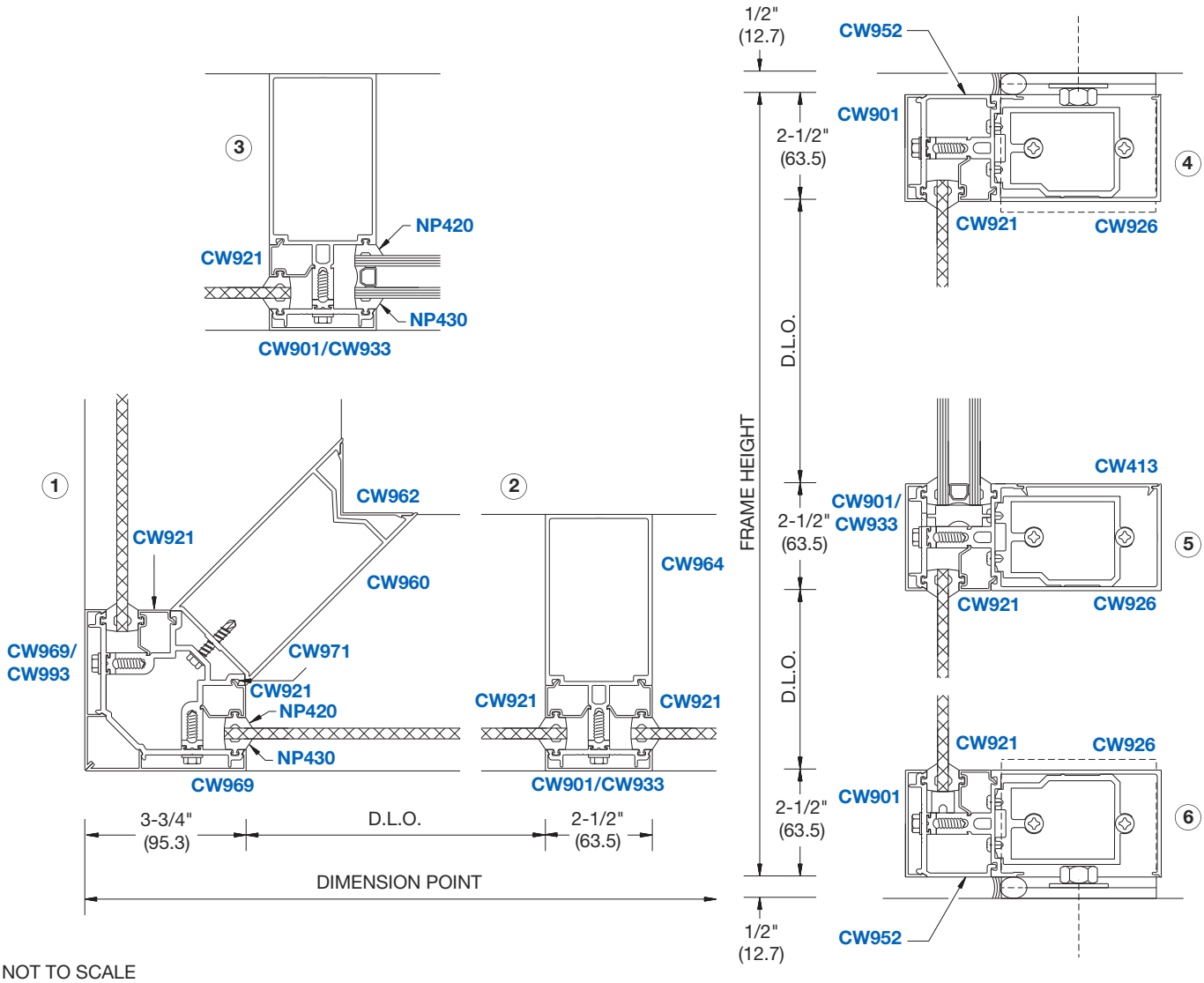

NOT TO SCALE

CURTAIN WALLS

Typical Details

Thermally Improved • Series 3250

DOOR FRAMING - 1" (25) GLAZING

NOTE: 4" (101.6) Back Members Shown; 5" (127) and 8" (203.2) Members Shown in Parentheses.

NOTE: Doors are available in stock to accommodate 36" x 84" (914 x 2134) and 72" x 84" (1829 x 2134) door openings. Visit **usalum.com** for more information.

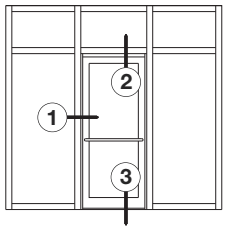

CENTER HUNG DOOR

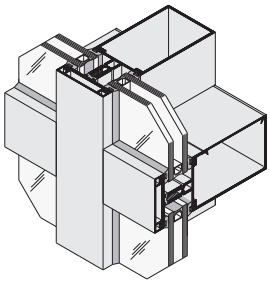

Captured Vertical Glazed Curtain Wall

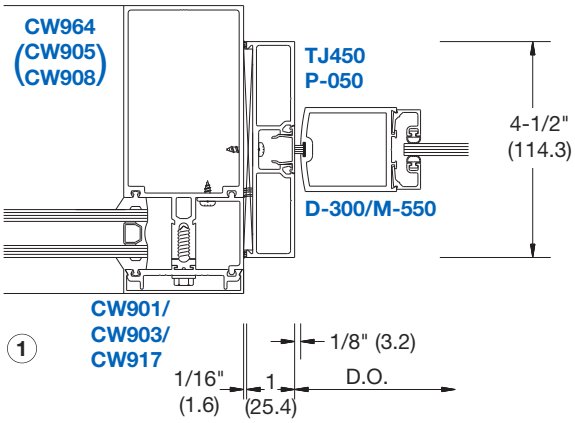

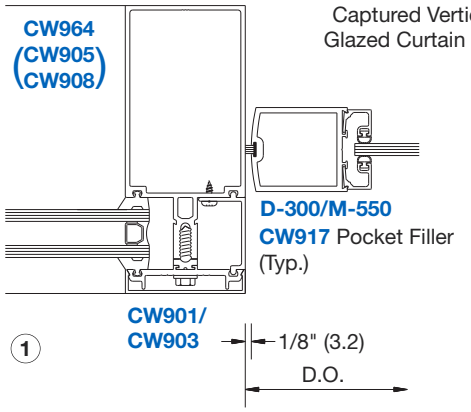

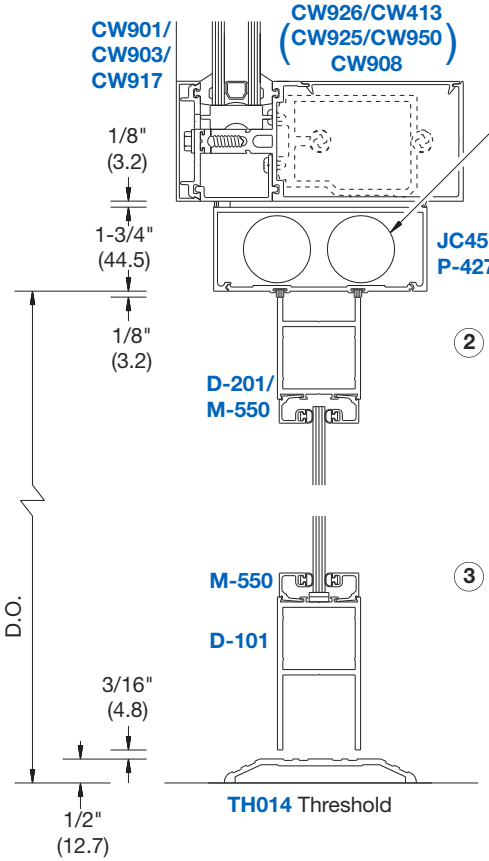

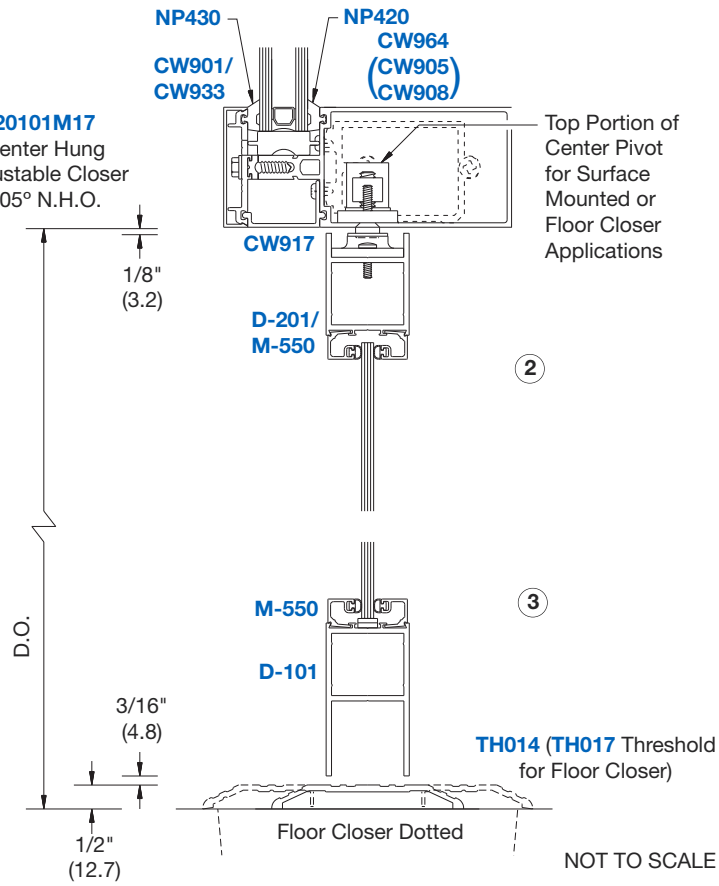

NOT TO SCALE

CURTAIN WALLS

Typical Details

Thermally Improved • Series 3250

DOOR FRAMING - 1" (25) GLAZING

NOTE: 4" (101.6) Back Members Shown; 5" (127) and 8" (203.2) Members Shown in Parentheses.

NOTE: Doors are available in stock to accommodate 36" x 84" (914 x 2134) and 72" x 84" (1829 x 2134) door openings. Visit usalum.com for more information.

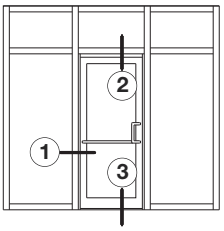

OFFSET HUNG DOOR

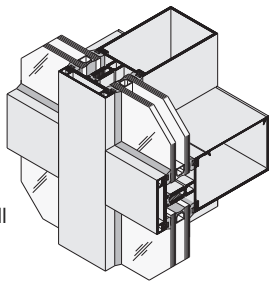

Captured Vertical Glazed Curtain Wall

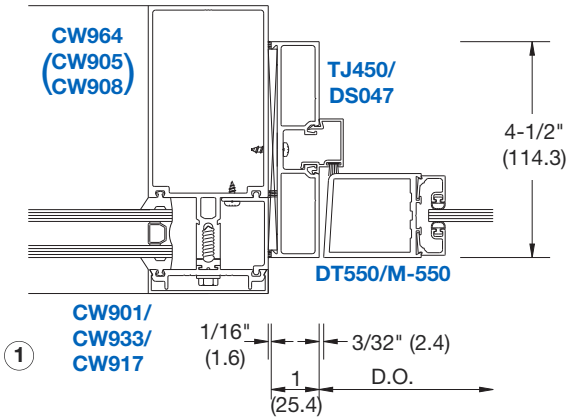

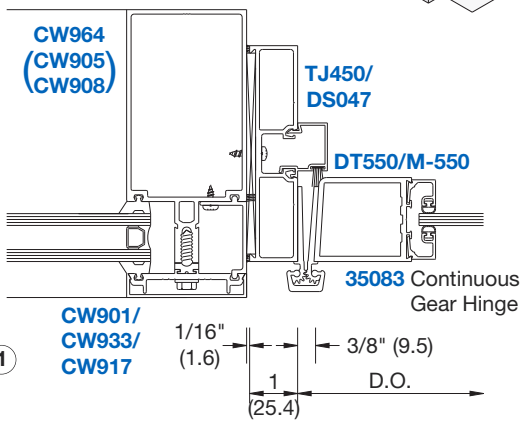

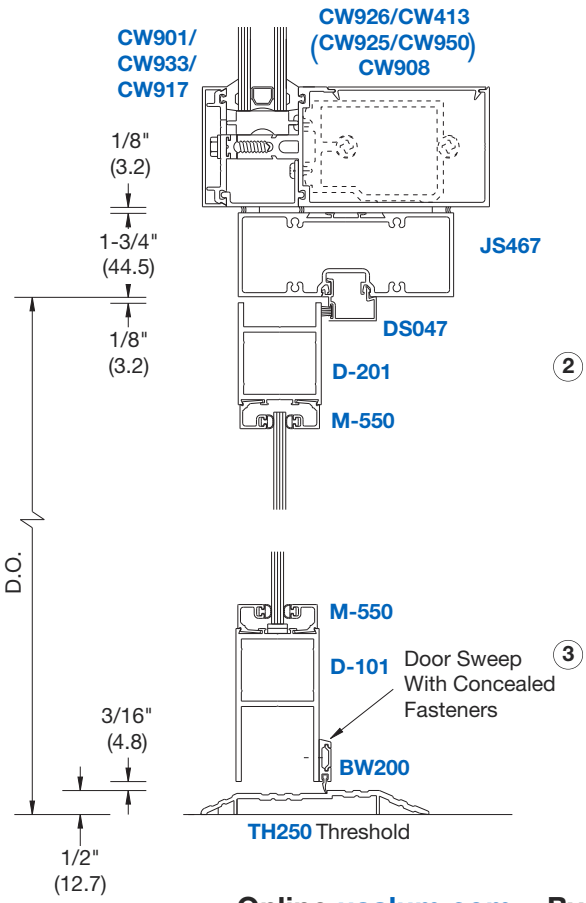

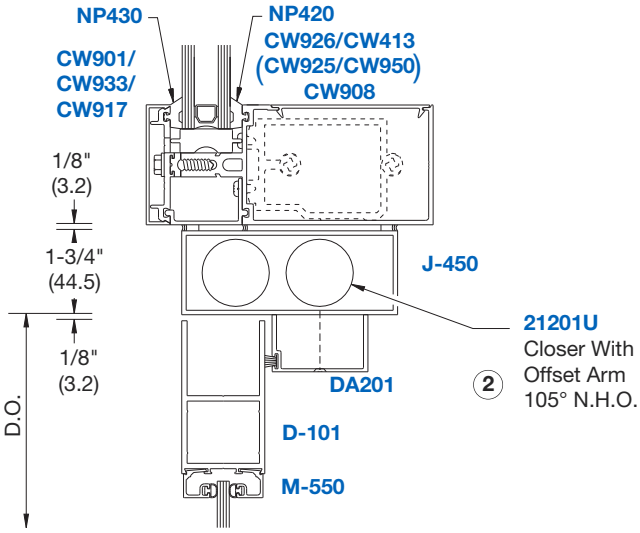

NOT TO SCALE

CURTAIN WALLS

Typical Details

Thermally Improved • Series 3250

DOOR FRAMING - 1" (25) GLAZING WITH FLUSH DOOR ADAPTOR

NOTE: 4" (101.6) Back Members Shown; 5" (127) and 8" (203.2) Members Shown in Parentheses.

NOTE: Doors are available in stock to accommodate 36" x 84" (914 x 2134) and 72" x 84" (1829 x 2134) door openings. Visit usalum.com for more information.

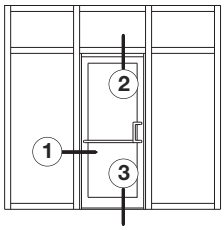

OFFSET HUNG DOOR

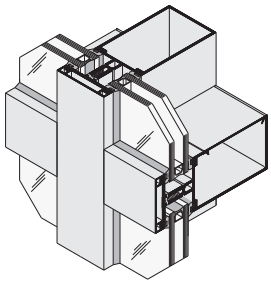

Captured Vertical Glazed Curtain Wall

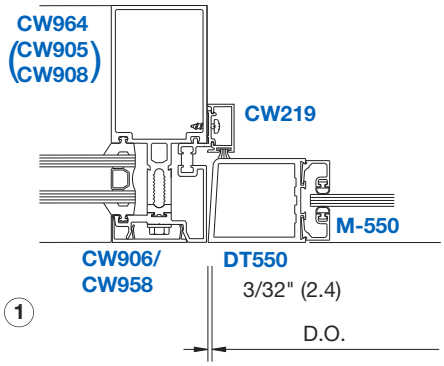

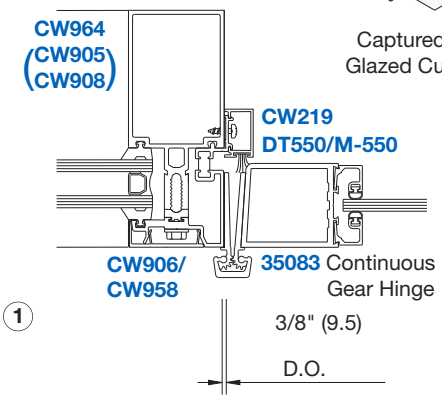

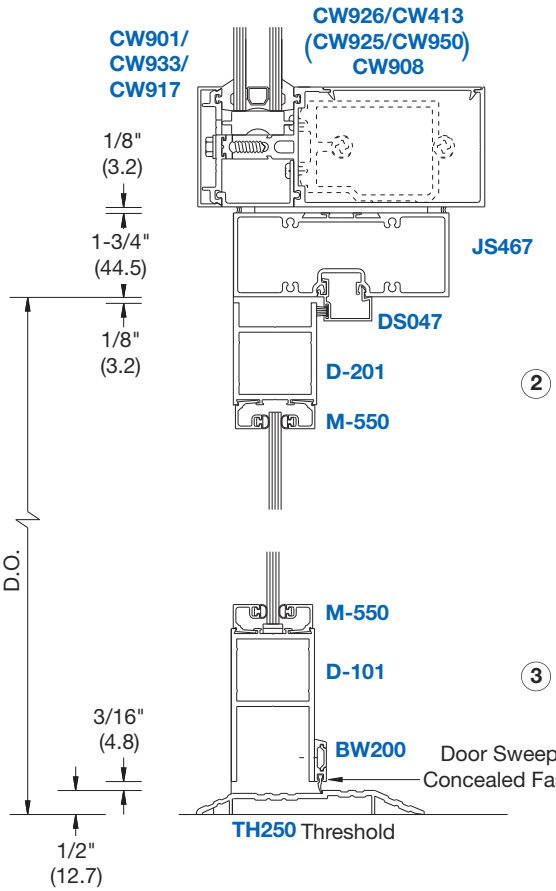

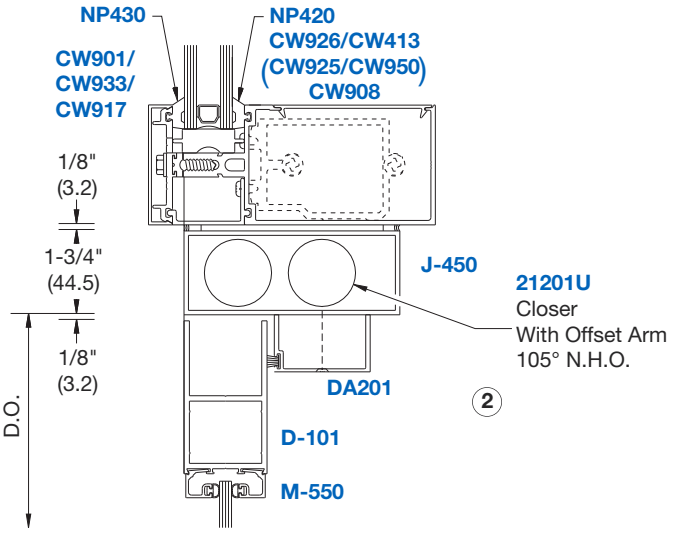

NOT TO SCALE

CURTAIN WALLS

Typical Details

Thermally Improved • Series 3250

MID-SPAN ANCHORS AND MULLION SPLICE

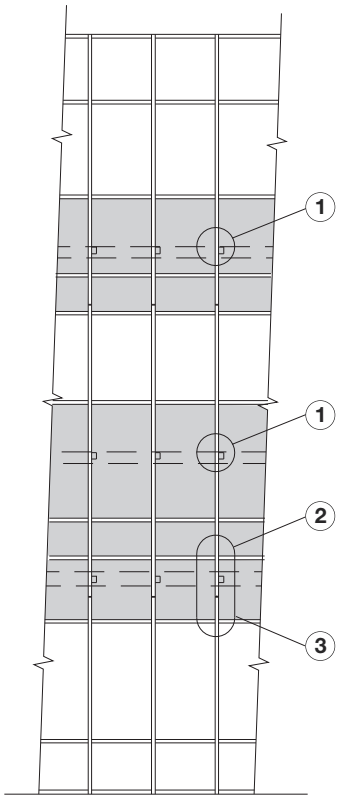

TYPICAL ELEVATION

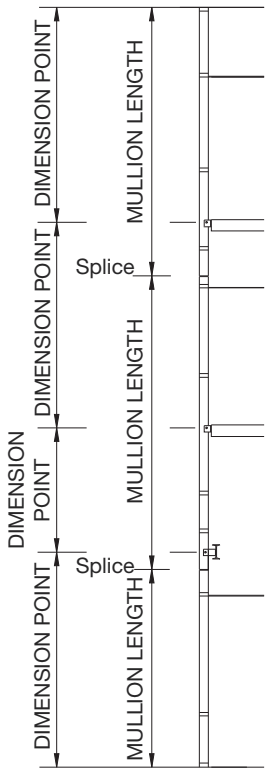

SECTION DETAIL

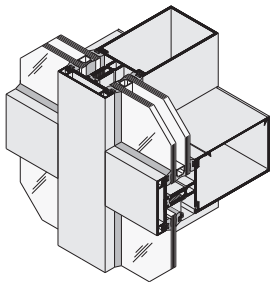

Captured Vertical Glazed Curtain Wall

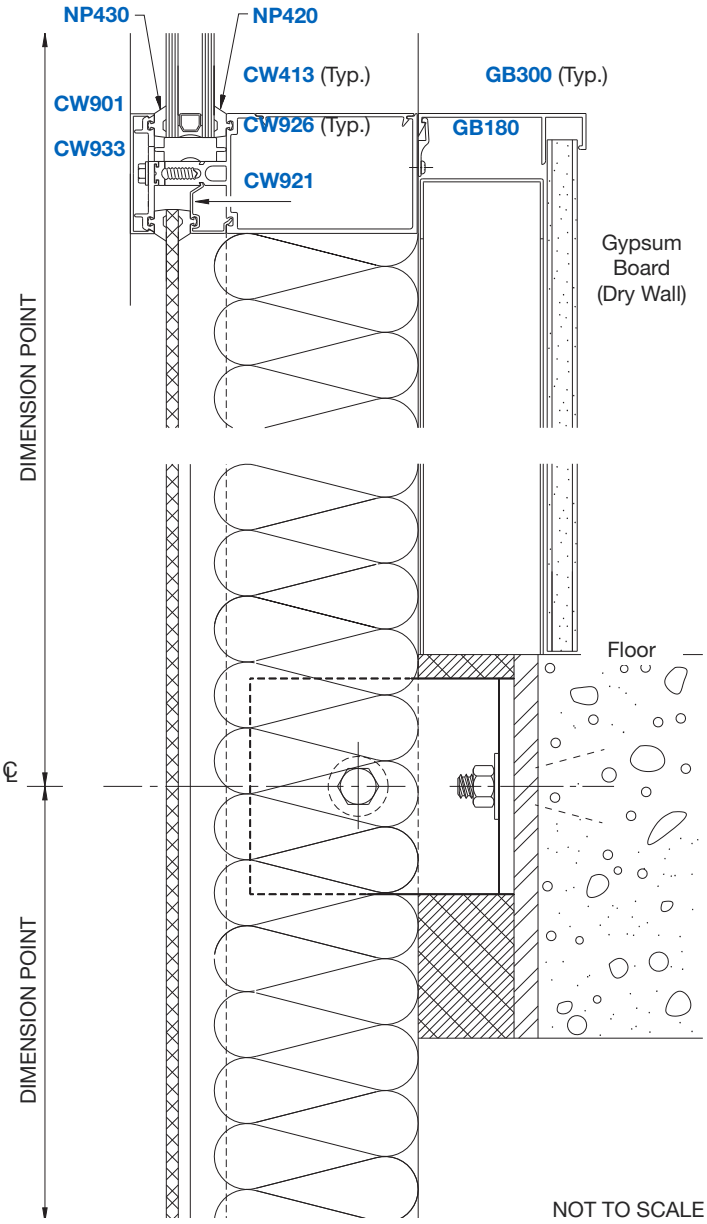

1

Fixed Anchor (Deadload Anchor)

NOTE: Anchor Type and Size Varies Per Job Requirements

NOT TO SCALE

CURTAIN WALLS

Typical Details

Thermally Improved • Series 3250

MID-SPAN ANCHORS AND MULLION SPLICE

2

EXPANSION ANCHOR (WINDLOAD ANCHOR)

NOTE: Anchor Type and Size Varies Per Job Requirements.

3

SPLICE JOINT

NOTE: Joint Width Should be Based on Mullion Length and Temperature Differential. A 1/2" (12.7) Gap Allows for 1/4" (6.4) Movement.

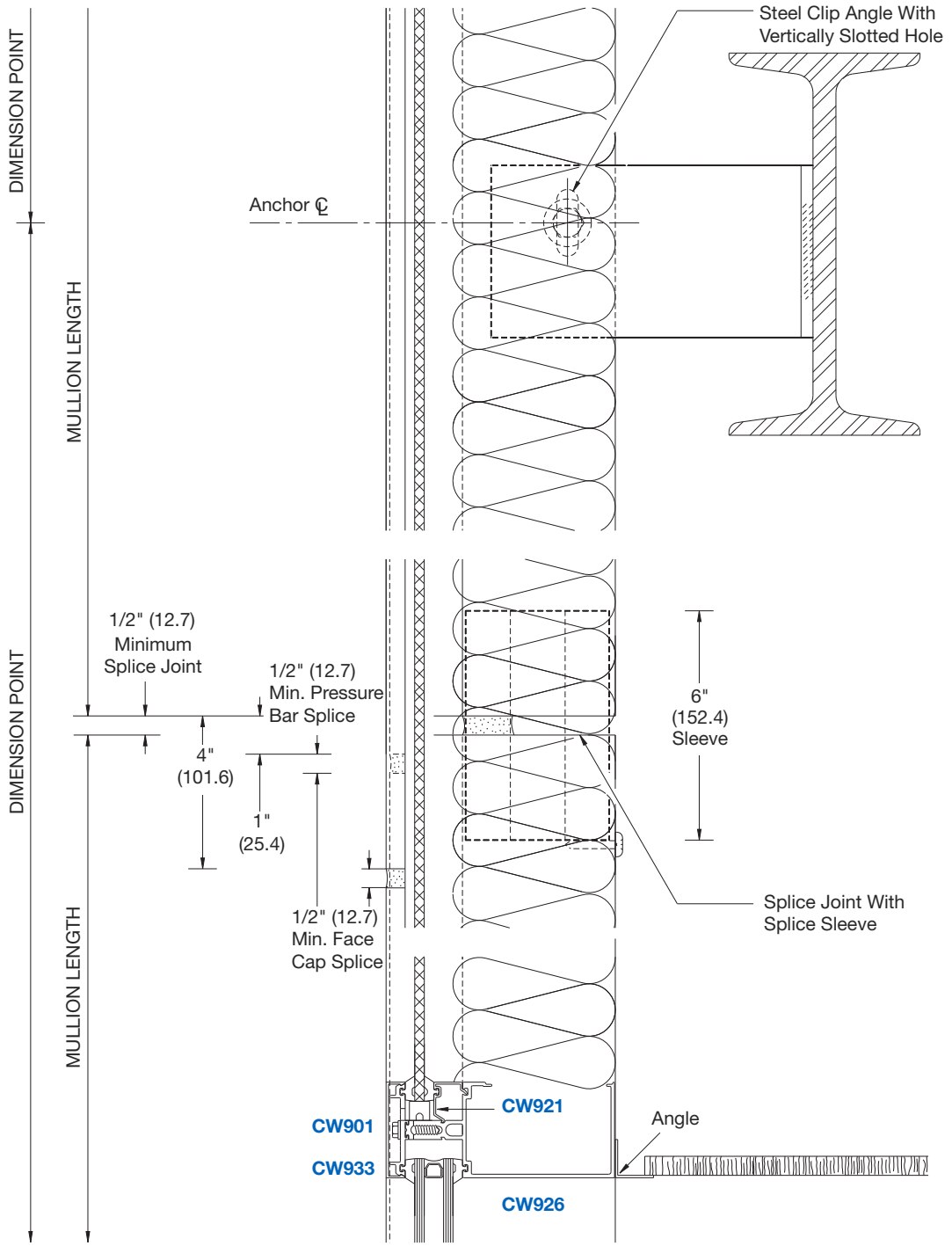

NOT TO SCALE

CURTAIN WALLS

Windload Charts

Thermally Improved • Series 3250

CAPTURED VERTICAL MULLIONS FOR 1/4" (6) GLAZING

Mullions designed for L/175 deflection ratio and for the following allowable working stresses:

Aluminum Alloy 6063-T5: Allowable Stress for Windload 12,929 psi. (89 MPa)
Steel Reinforcing Allowable Stress for Windload 26,666 psi. (183 MPa)

Curves represent the limit values and are based on criteria for simple beam, uniformly loaded, using the distribution of wind forces on the wall with rectangular loading. Glass is not considered as contributing to resistance of deflection.

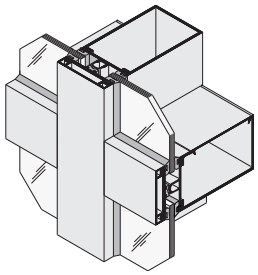

Captured Vertical Glazed Curtain Wall

Limitation of vertical mullions for:
CURVES **A** = 15 PSF (718 Pa)
CURVES **B** = 20 PSF (957 Pa)
CURVES **C** = 25 PSF (1197 Pa)
CURVES **D** = 30 PSF (1436 Pa)

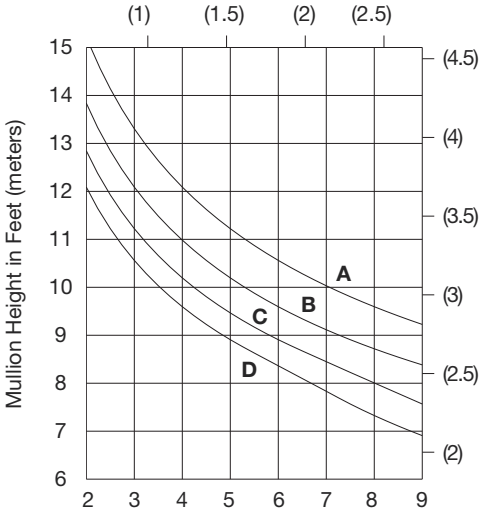

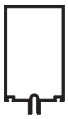

CW954

4" (101.6)

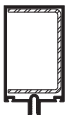

CW954 With **SS964**

I = 3.481 (144.89 x 10^4)
S = 1.490 (24.42 x 10^3)
Steel Stiffener
I = 1.996 (83.08 x 10^4)
S = 1.141 (18.70 x 10^3)
I_{AL+STL} = 9.269 (385.80 x 10^4)

Mullion Spacing in Feet (meters)

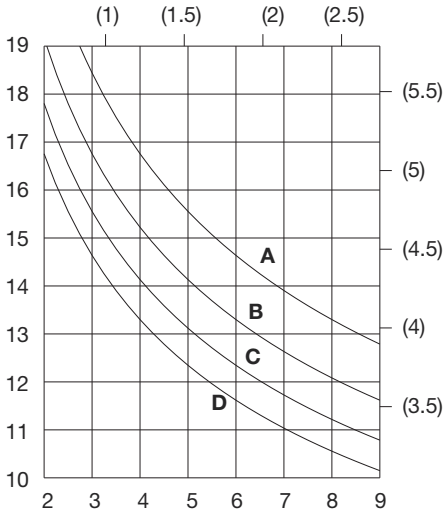

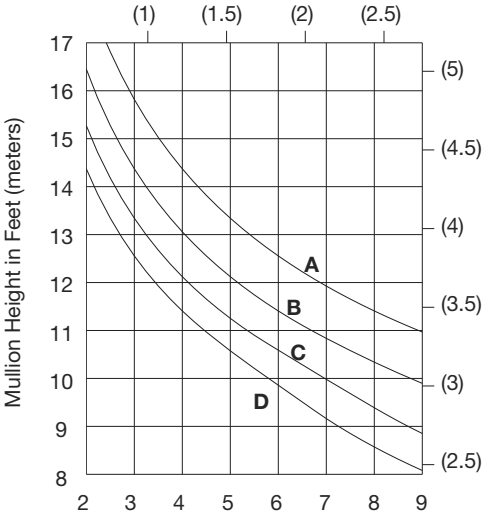

CW915

5" (127)

CW915 With **SS905**

I = 5.849 (243.45 x 104^4)
S = 2.039 (33.41 x 10^3)
Steel Stiffener
I = 3.571 (148.64 x 10^4)
S = 1.587 (26 x 10^3)
I_{AL+STL} = 16.205 (674.50 x 10^4)

Mullion Spacing in Feet (meters)

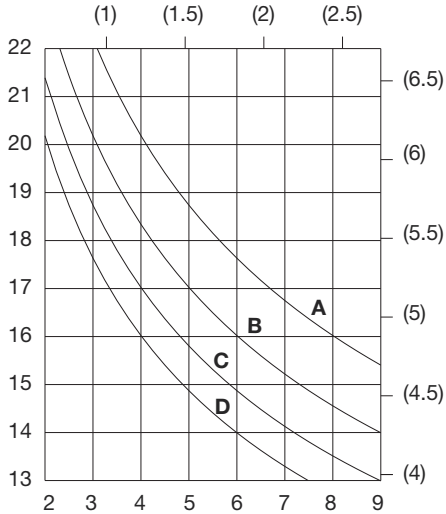

CURTAIN WALLS

Windload Charts

Thermally Improved • Series 3250

CAPTURED VERTICAL MULLIONS FOR 1/4" (6) GLAZING

Limitation of vertical mullions for:
CURVES **A** = 15 PSF (718 Pa)
CURVES **B** = 20 PSF (957 Pa)
CURVES **C** = 25 PSF (1197 Pa)
CURVES **D** = 30 PSF (1436 Pa)

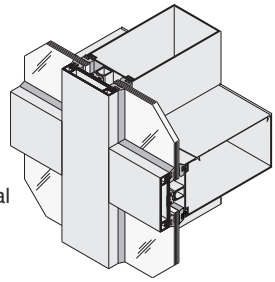

Captured Vertical 1/4" (6) Glazed Curtain Wall

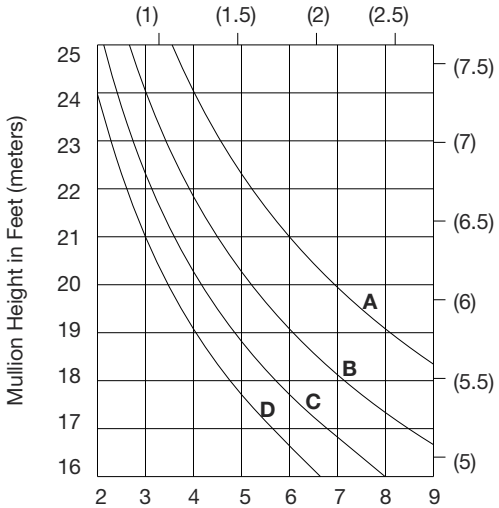

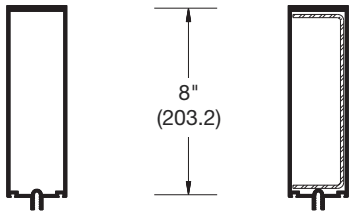

CW918

CW918 With **SS908**

I = 27.365 (1139.02 x 10^4)
S = 5.988 (98.13 x 10^3)
Steel Stiffener
I = 10.725 (446.41 x 10^4)
S = 2.959 (48.49 x 10^3)
IAL+STL = 58.468 (2433.62 x 10^4)

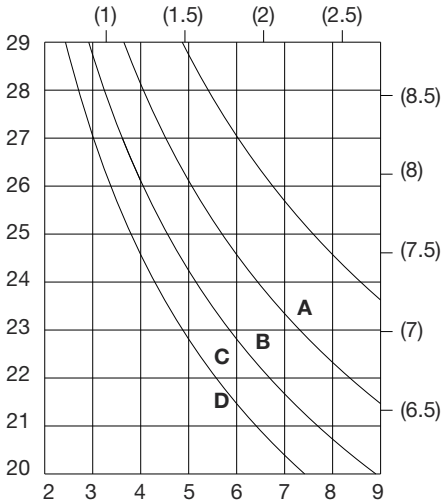

Mullion Spacing in Feet (meters)

CAPTURED VERTICAL MULLIONS FOR 1" (25) GLAZING

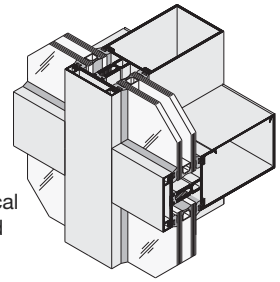

Captured Vertical 1" (25) Glazed Curtain Wall

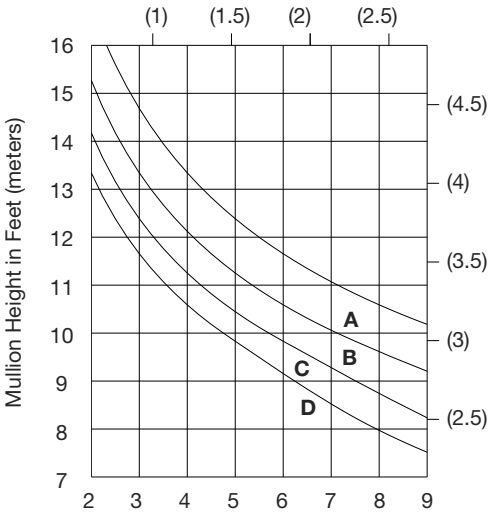

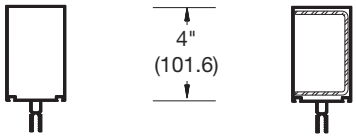

CW964

CW964 With **SS964**

I = 4.679 (194.75 x 10^4)
S = 1.764 (28.91 x 10^3)
Steel Stiffener
I = 1.996 (83.08 x 10^4)
S = 1.141 (18.7 x 10^3)
IAL+STL = 10.467 (435.67 x 10^4)

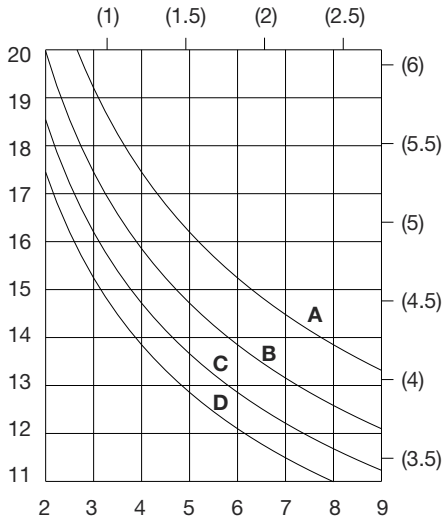

Mullion Spacing in Feet (meters)

CURTAIN WALLS

Windload Charts

Thermally Improved • Series 3250

CAPTURED VERTICAL MULLIONS FOR 1" (25) GLAZING

Limitation of vertical mullions for:
CURVES **A** = 15 PSF (718 Pa)
CURVES **B** = 20 PSF (957 Pa)
CURVES **C** = 25 PSF (1197 Pa)
CURVES **D** = 30 PSF (1436 Pa)

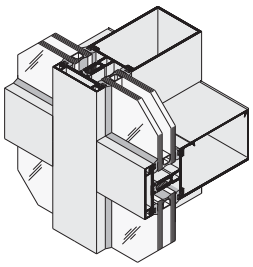

Captured Vertical Glazed Curtain Wall

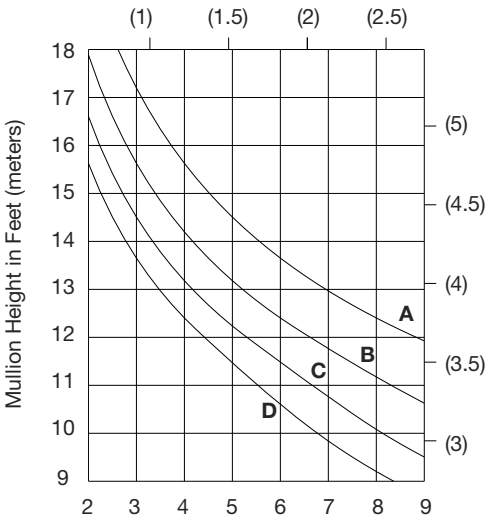

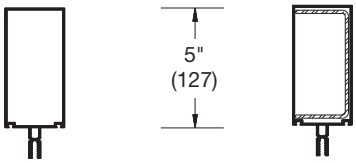

CW905

CW905 With **SS905**

I = 7.520 (313 x 10^4)
S = 2.351 (38.53 x 10^3)
Steel Stiffener
I = 3.571 (148.64 x 10^4)
S = 1.587 (26 x 10^3)
IAL+STL = 17.875 (744.05 x 10^4)

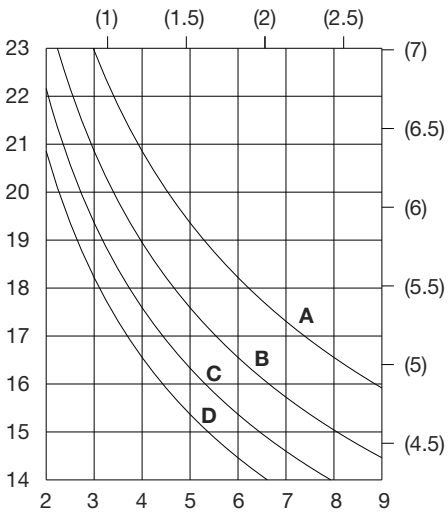

Mullion Spacing in Feet (meters)

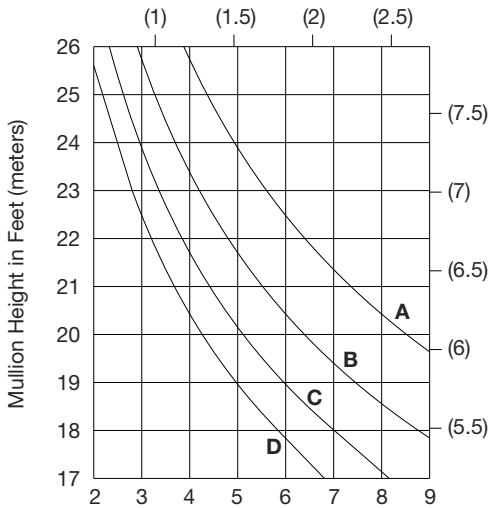

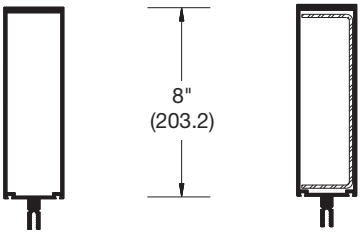

CW908

CW908 With **SS908**

I = 33.579 (1397.66 x 10^4)
S = 6.847 (112.20 x 10^3)
Steel Stiffener
I = 10.725 (446.41 x 10^4)
S = 2.959 (48.49 x 10^3)
IAL+STL = 64.682 (2692.27 x 10^4)

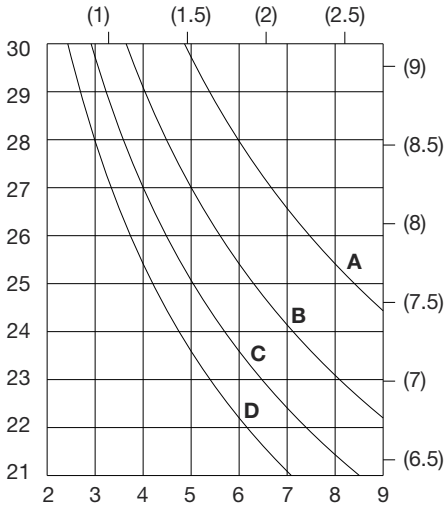

Mullion Spacing in Feet (meters)

CURTAIN WALLS

Deadload Charts

Thermally Improved • Series 3250

HORIZONTAL MULLIONS FOR 1/4" (6) GLAZING

Deadload charts are based on 1/8" (3.2) maximum deflection at the centerpoint of the horizontal member and on a glass weight of 3.25 psf (15.87 Kg/m²)

Glass shall rest on two setting blocks located at:
CURVES **A**: 1/4 points
CURVES **B**: 1/8 points or 8" (203.2) from corners, whichever is larger

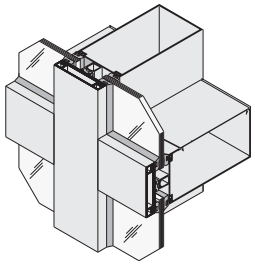

Captured Vertical Glazed Curtain Wall

SHEAR BLOCK ASSEMBLY

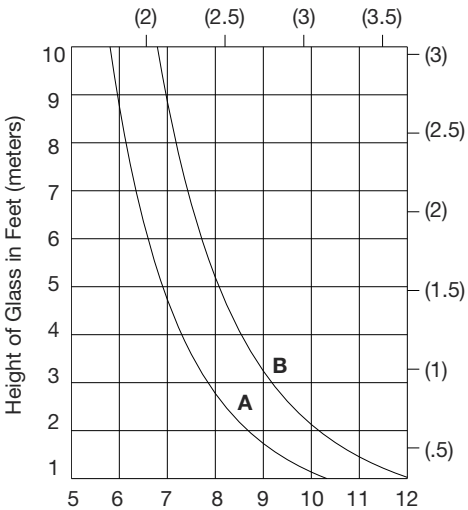

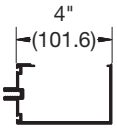

CW936
Iyy = .738 (30.72 x 10⁴)

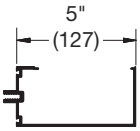

CW923
Iyy = .851 (35.42 x 10⁴)

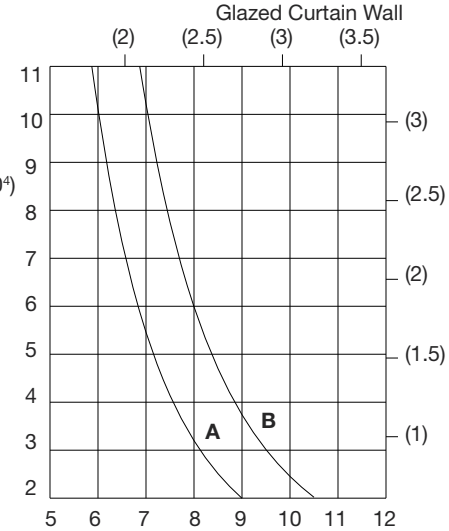

Mullion Span in Feet (meters)

PANEL ASSEMBLY

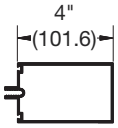

CW954
Iyy = 1.324 (55.11 x 10⁴)

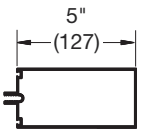

CW915
Iyy = 1.593 (66.31 x 10⁴)

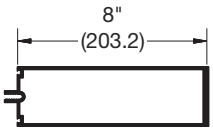

CW918
Iyy = 3.227 (134.32 x 10⁴)

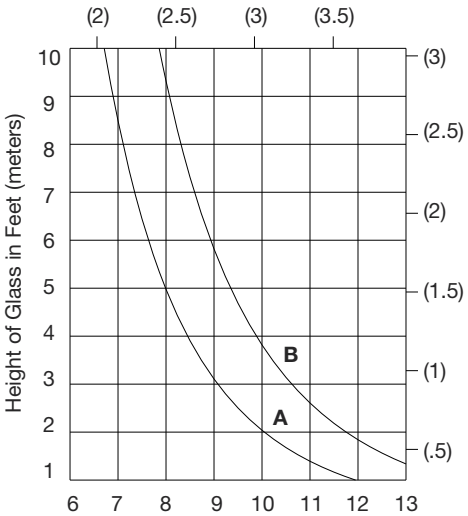

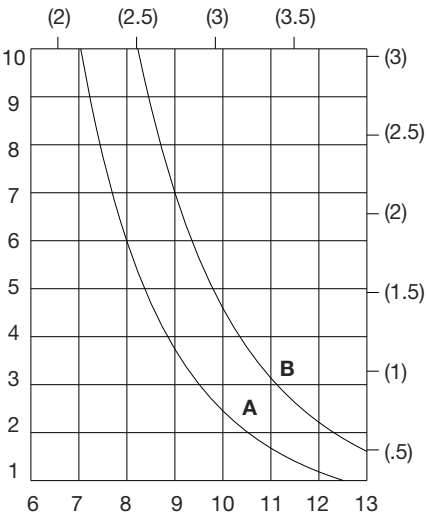

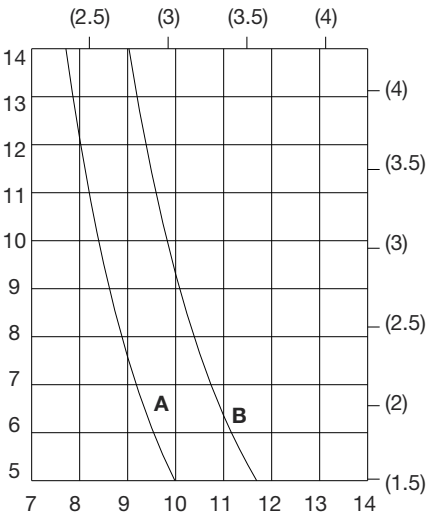

Mullion Span in Feet (meters)

CURTAIN WALLS

Deadload Charts

Thermally Improved • Series 3250

HORIZONTAL MULLIONS FOR 1" (25) GLAZING

Deadload charts are based on 1/8" (3.2) maximum deflection at the centerpoint of the horizontal member and on a glass weight of 6.5 psf (31.74 Kg/m^2)

Glass shall rest on two setting blocks located at:
CURVES **A**: 1/4 points
CURVES **B**: 1/8 points or 8" (203.2) from corners, whichever is larger

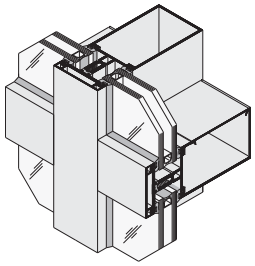

Captured Vertical Glazed Curtain Wall

SHEAR BLOCK ASSEMBLY

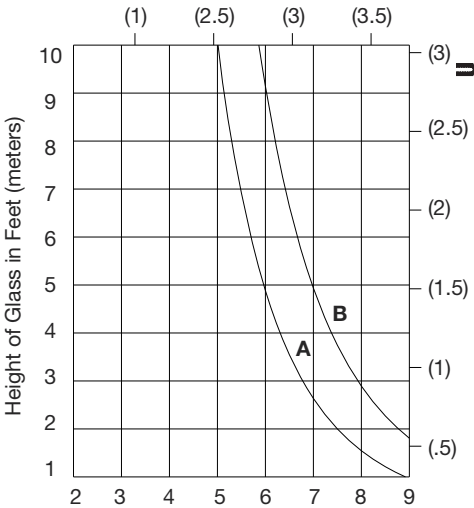

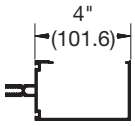

CW926
Iyy = .822 (34.21 x 10^4)

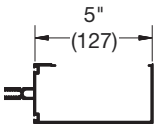

CW925
Iyy = .934 (38.88 x 10^4)

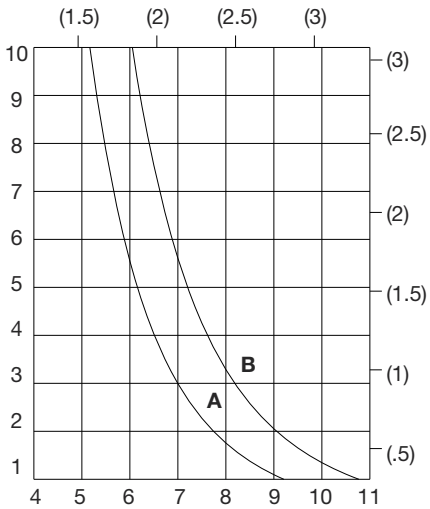

Mullion Span in Feet (meters)

PANEL ASSEMBLY

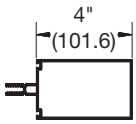

CW964
Iyy = 1.329 (55.32 x 10^4)

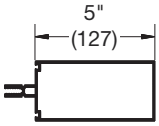

CW905
Iyy = 1.599 (66.56 x 10^4)

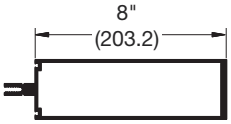

CW908
Iyy = 3.233 (134.57 x 10^4)

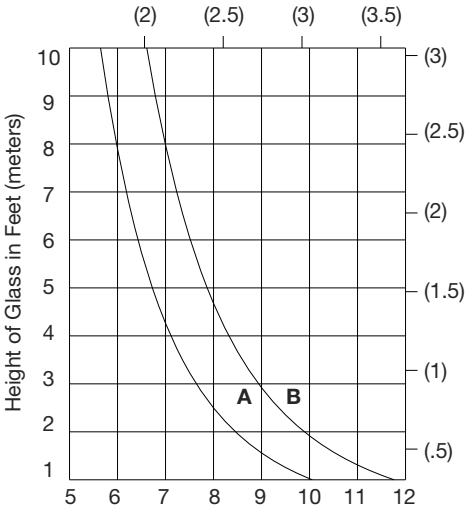

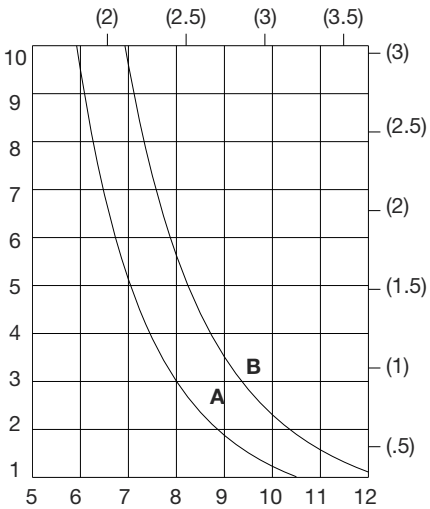

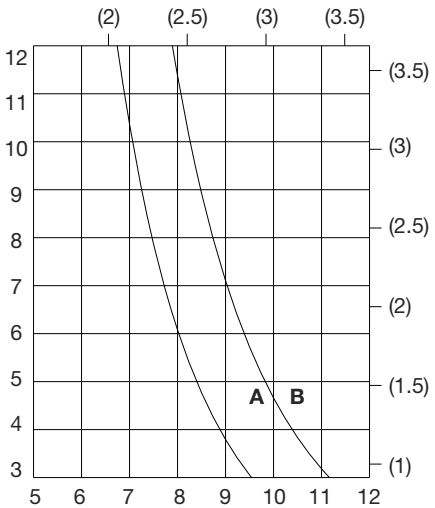

Mullion Span in Feet (meters)

CURTAIN WALLS

Accessories

Thermally Improved • Series 3250

FOR 1/4" (6) AND 1" (25) GLAZING

PART NO.	DETAIL	DESCRIPTION	PKG. QTY.	FOR MULLION DEPTHS		
				4" (101.6)	5" (127)	8" (203.2)
AP974	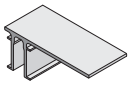	Wall Jamb Anchor at Head and Sill for CW954, CW964	6	●		
AP964	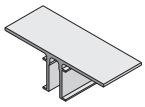	Intermediate Vertical Anchor at Head and Sill for CW954, CW964	12	●		
AP960	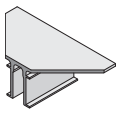	Outside 90 Degree Corner Anchor at Head and Sill for CW960	10	●		
AP994	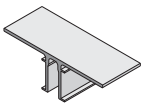	Intermediate Vertical Anchor at Head and Sill for CW934	12		●	
AP975	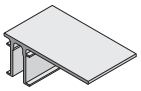	Wall Jamb Anchor at Head and Sill for CW915, CW905	6		●	
AP965	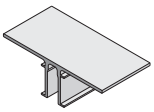	Intermediate Vertical Anchor at Head and Sill for CW915, CW905	12		●	
AP995	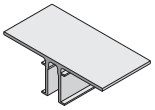	Intermediate Vertical Anchor at Head and Sill for CW935	12		●	
AP980	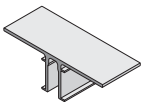	Inside 90 Degree Corner Anchor at Head and Sill for CW980 (Butt Glaze only)	10		●	
AP978	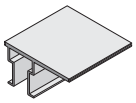	Wall Jamb Anchor at Head and Sill for CW918, CW908	6			●
AP968	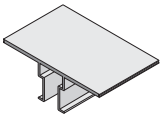	Intermediate Vertical Anchor at Head and Sill for CW918, CW908	12			●
AP998	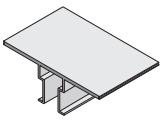	Intermediate Vertical Anchor at Head and Sill for CW974	12			●

CRL U.S. ALUMINUM

CURTAIN WALLS

Accessories

Thermally Improved • Series 3250

FOR 1/4" (6) AND 1" (25) GLAZING

PART NO.	DETAIL	DESCRIPTION	PKG. QTY.	FOR MULLION DEPTHS		
				4" (101.6)	5" (127)	8" (203.2)
SL944	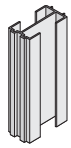	Mullion Splice Sleeve for CW954, CW964	12	●		
SL934	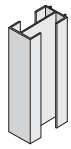	Mullion Splice Sleeve for CW934	12	●		
SL960	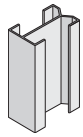	Outside 90 Degree Corner Mullion Splice Sleeve for CW960	5	●		
SL945	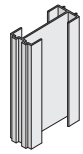	Mullion Splice Sleeve for CW915, CW905	12		●	
SL935	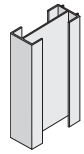	Mullion Splice Sleeve for CW935	12		●	
SL980	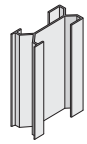	Inside 90 Degree Corner Mullion Splice Sleeve for CW980	5		●	
SL948	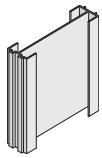	Mullion Splice Sleeve for CW918, CW908	12			●
SL974	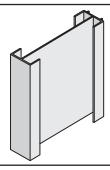	Mullion Splice Sleeve for CW974	12			●
DJ360	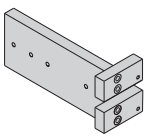	Drill Jig for Shear Block	1	●	●	●

CURTAIN WALLS

Accessories

FOR 1/4" (6) AND 1" (25) GLAZING

Thermally Improved • Series 3250

PART NO.	DETAIL	DESCRIPTION	PKG. QTY.	FOR MULLION DEPTHS		
				4" (101.6)	5" (127)	8" (203.2)
AP954		Intermediate Shear Block for 4" Mullions (Includes screws)	20	●		
AP955	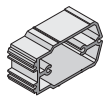	Intermediate Shear Block for 5" Mullions (Includes screws)	20		●	
AP928	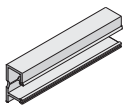	Intermediate Shear Block for 8" Tubular Mullions (Includes screws)	20			●
AC956	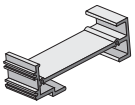	Intermediate Shear Block for 8" Open Back Mullions (Includes screws)	20			●
AP926	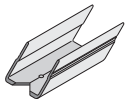	Corner Shear Block for Inside and Outside Corners (Includes screws)	20	●	●	●
HD973 HD975	HD973 for 1/4" (6) HD975 for 1" (25)	End Dam for Captured Mullions	50	●	●	●
WD925 WD900	WD925 for 1/4" (6) WD900 for 1" (25)	End Dam for Butt Glaze Mullions	50	●	●	●
CP925 CP900	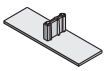 CP925 for 1/4" (6) 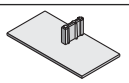 CP900 for 1" (25)	Closure Plate for Captured Mullions	50	●	●	●
CP950 CP951	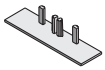 CP950 for 1/4" (6) 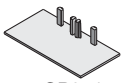 CP951 for 1" (25)	Closure Plate for Butt Glaze Mullions	50	●	●	●
CP952 CP953	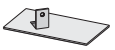 CP952 for 1/4" (6) 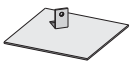 CP953 for 1" (25)	Closure Plate for Outside Corner	10	●	●	●
CP954	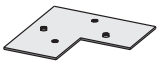	Closure Plate for Inside Corner	10	●	●	●
CW368	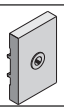	Temporary Glass Retainer for Captured Mullions	50	●	●	●
RG635	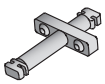	Temporary Glass Retainer for Butt Glaze Patent No. D295,952	50	●	●	●

CRL U.S. ALUMINUM

CURTAIN WALLS

Accessories

Thermally Improved • Series 3250

FOR 1/4" (6) AND 1" (25) GLAZING

PART NO.	DETAIL	DESCRIPTION	PKG. QTY.	FOR MULLION DEPTHS		
				4" (101.6)	5" (127)	8" (203.2)
NP430		Exterior Gasket	250' Roll	●	●	●
NP420		Interior Gasket	250' Roll	●	●	●
SP450		Spacer Gasket for Butt Glaze	250' Roll	●	●	●
SB925	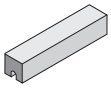	Setting Block for 1/4" (6) Glass; 4" (101.6) Long	100	●	●	●
AW900		Edge Block for 1/4" (6) Glass; 11/16" x 2-1/2" (17.5 x 63.5)	50	●	●	●
SB910	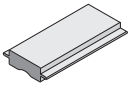	Setting Block for 1" (25) Glass; 4" (101.6) Long	100	●	●	●
AW901		Edge Block for 1" (25) Glass; 1-7/16" x 2-1/2" (36.5 x 63.5)	100	●	●	●
MS222		Screw for Pressure Bar 1/4"- 20 x 1" (25) HWHCS with SRG5	200	●	●	●
WD960 WD961	WD960 for 1/4" (6) WD961 for 1" (25)	Water Deflector for Outside Corner	10	●	●	●
WD980 WD981	WD980 for 1/4" (6) WD981 for 1" (25)	Water Deflector for Inside Corner	10	●	●	●
SS964	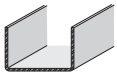	Steel Stiffener Fits in: CW954, CW934, and CW964	16' (4.88 m) Stock Length	●		
SS905	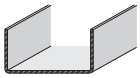	Steel Stiffener Fits in: CW915, CW935, and CW905	16' (4.88 m) Stock Length		●	
SS908	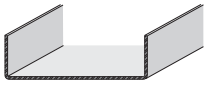	Steel Stiffener Fits in: CW918, CW974, and CW908	16' (4.88 m) Stock Length			●

CURTAIN WALLS

Table of Contents

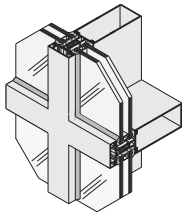

SERIES 3252
Captured Glazed Curtain Wall

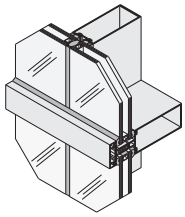

SERIES 3252SG
Structural Silicone Vertical Glazed Curtain Wall

High Performance Thermally Broken

- Series 3252
- Series 3252SG

Section J4

Page

SPECIFICATIONS....02-J4
TECHNICAL DATA....03-J4
SPECIAL FEATURES....04-J4
TYPICAL DETAILS....05-J4 thru 09-J4
WINDLOAD CHARTS....10-J4
DEADLOAD CHARTS....11-J4
ACCESSORIES....12-J4

Project: Robert M. Isaac Municipal Court, Colorado Springs, CO

Due to the diversity in state/provincial, local, and federal laws and codes that govern the design and application of architectural products, it is the responsibility of the individual architect, owner, and installer to ensure that products selected for use on projects comply with all applicable building codes and laws. U.S. Aluminum exercises no control over the use or application of its products, glazing materials, and operating hardware, and assumes no responsibility thereof.

The rapidly changing technology within the architectural aluminum products industry demands that U.S. Aluminum reserve the right to revise, discontinue or change any product line, specification or electronic media without prior written notice.

NOTE: Dimensions in parentheses ( ) are millimeters unless otherwise noted.
Other metric units shown in this publication are:

m - meter	Kg - kilogram
Pa - pascal	KPa - kilopascal
MPa - megapascal	

CURTAIN WALLS

Specifications

High Performance Thermally Broken
- Series 3252
- Series 3252SG

SECTION 08 44 13 ALUMINUM CURTAIN WALL SYSTEMS

I. GENERAL DESCRIPTION
Work Included: Furnish all necessary materials, labor, and equipment for the complete installation of aluminum framing as shown on the drawings and specified herein. (Specifier Note: It is suggested that related items such as aluminum entrance doors, glass, and sealants be included whenever possible.)
Work Not Included: Structural support of the framing system, interior closures, and trim. (Specifier list other exclusions). Related Work Specified Elsewhere: (Specifier list).

QUALITY ASSURANCE
Drawings and specifications are based on the Series 3252 Curtain Wall Systems as manufactured by U.S. Aluminum. Whenever substitute products are to be considered, supporting technical literature, samples, drawings, and performance data must be submitted 10 days prior to bid in order to make a valid comparison of the products involved.
Test reports certified by an independent test laboratory must be made available upon request.

PERFORMANCE REQUIREMENTS
Air Infiltration: shall be tested in accordance with ASTM E283. Infiltration shall not exceed .06 CFM per square foot (.0003m3/ sm2) fixed area when tested at 6.24 psf (300 Pa).
Water Infiltration: shall be tested in accordance with ASTM E331. No water penetration at test pressure of 15 psf (718 Pa).
Structural Performance: shall be tested in accordance with ASTM E330 and based on:
- Maximum deflection of L/175 of the span
- Allowable stress with a safety factor of 1.65

The system shall perform to this criteria under a windload of *(Specify)* psf. System shall exceed maximum seismic lateral displacement requirements specified in section 1628.8.2 of the Uniform Building Code, 1994 edition. Upon successful completion of the Phase I seismic testing, the curtain wall shall once again be subjected to and must successfully pass the air and water infiltration tests specified above before proceeding to Phase II testing.
Thermal Performance: Series 3252 shall be tested in accordance with NFRC. NFRC's Condensation Resistance rating is NOT equivalent to a Condensation Resistance Factor (CRF) determined in accordance with AAMA 1503, and NFRC-100
Testing Procedures: ASTM 283, E 331, and E 330 - Laboratory performance testing. AAMA 503-08 - Newly installed curtain walls. AAMA 511-08 - Installed curtain walls after six months.

II. PRODUCTS MATERIALS
Extrusions shall be 6063-T6 alloy and temper (ASTM B221 alloy T5 temper). Fasteners, where exposed, shall be aluminum, stainless steel or zinc plated steel in accordance with ASTM A 164. Perimeter anchors shall be aluminum or steel, providing the steel is properly isolated from the aluminum. For vertical silicone glazing, system shall provide conventional glass support at horizontal and perimeter members and structural silicone support at intermediate verticals. Horizontal members and jamb configurations shall allow for pockets to receive E.P.D.M. elastomeric extruded glazing gaskets. Interior vertical glass spacers shall be extruded silicone compatible E.P.D.M. (Silicone compatible rubber) All materials that come in contact with the silicone should be tested for compatibility. Samples of aluminum vertical mullions should be submitted to the silicone manufacturer for adhesion evaluation.

FINISH
All exposed framing surfaces shall be free of scratches and other serious blemishes. Aluminum extrusions shall be given a caustic etch followed by an anodic oxide treatment to obtain...
(Specify one of the following):
_____#11 Clear anodic coating
_____#22 Dark Bronze anodic coating
_____#33 Black anodic coating
Fluoropolymer paint coating conforming with the requirements of AAMA 2605. Color shall be *(Specify a U.S. Aluminum standard color).*

FABRICATION
All mullions and horizontals shall have flexible polyurethane thermal break material located on exterior side of glass plane. Exterior glazing seal gasket shall be secured by extruded aluminum pressure plates fastened to main grid members. Provisions shall be made at all sealed horizontals to weep moisture accumulation to the exterior. A cover shall be snapped over pressure plate to show only a sharp, uninterrupted exterior profile. Framing members shall provide for straight in glazing on all sides, with through sight lines and no projecting stops or face joints. Vertical and horizontal framing members shall have a nominal width of 2-1/2" (63.5). Overall depth of system shall be *(Specify).* System shall provide for two piece horizontal framing so that all fasteners at intersection of horizontal and vertical members will be concealed. There shall be no exposed fasteners at perimeter sections.

III. EXECUTION INSTALLATION
All glass framing shall be set in correct locations as shown in the details and shall be level, square, plumb, and in alignment with other work in accordance with the manufacturer's installation instructions and approved shop drawings. All joints between framing and the building structure shall be sealed in order to secure a watertight installation.

PROTECTION AND CLEANING
After installation the General Contractor shall adequately protect exposed portions of aluminum surfaces from damage by grinding and polishing compounds, plaster, lime, acid, cement or other contaminants. The General Contractor shall be responsible for final cleaning. Per AAMA 609 and 610.

CURTAIN WALLS

Technical Data

High Performance Thermally Broken
- Series 3252
- Series 3252SG

Series 3252 Curtain Wall System brings ultra high thermal performance to your curtain wall options. Series 3252 is for 1" (25) insulating double pane glazing, and Series 3252SG combines the horizontals mullions of the 3252 with structural silicone glazed vertical mullions.

3252 Size Specific U-Factor Matrix	
Center of Glass U-Factor	*Overall U-Factor
0.48 to 0.20	0.53 to 0.30

3252 Size SHGC Matrix	
Center of Glass SHGC	*Overall SHGC
0.65 to 0.05	0.60 to 0.06

3252 Size VT Matrix	
Center of Glass SHGC	*Overall SHGC
0.65 to 0.05	0.59 to 0.05

Based on NFRC-100.

Size Specific U-Factor, SHGC, and VT Matrices are based on the standard Glazed Wall specimen size of 78.75" wide by 78.75" high (2000 mm x 2000 mm). *This represents 90.1% Vision Area / Total Area

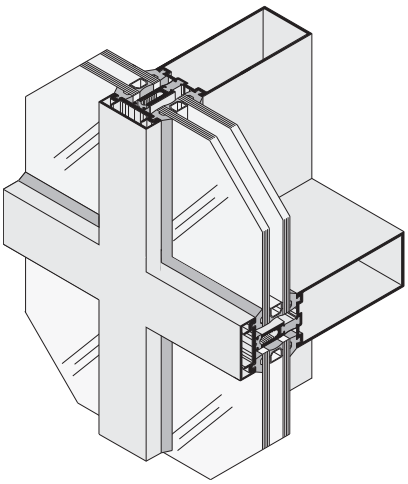

SERIES 3252
Captured Vertical Glazed Curtain Wall

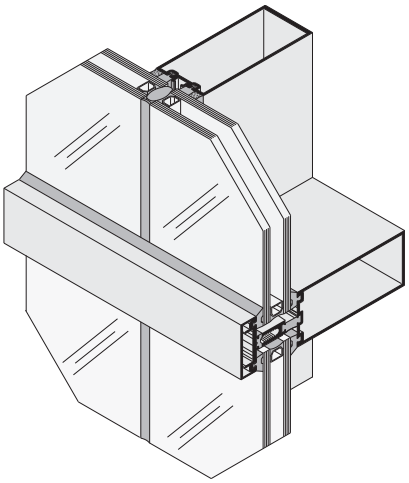

SERIES 3252SG
Structural Silicone Vertical Glazed Curtain Wall

SERIES	WIDTH	DEPTH*	GLAZING INFILL	APPLICATIONS
3252 3252SG	2-1/2" (63.5)	7" (177.8)	1" (25) and/or 1/4" (6)	Low-Rise to Mid-Rise Buildings Where Exterior Glazing is Required

* Other depths available upon request

GLASS SIZES**	
Glass Width and Height	= Daylight Opening + 1" (25.4)

** These formulae do not take into account glass tolerances. Consult glass manufacturer before ordering glass.

CURTAIN WALLS

Special Features

High Performance Thermally Broken
- Series 3252

- **Extruded Aluminum Mullion Anchors**
- **Extruded Shear Blocks are Furnished to Ensure Extra Strong Horizontal to Vertical Joinery**
- **Injection Molded End Dams and Closure Plates Used for Controlling Water Infiltration**

Complementing the efficiency of insulating glass, Series 3252 Curtain Wall Systems are thermally broken by a continuous Thermal Spacer interlocked with pressure plates and adds our Fill and Debridge Technology. The 3252 uses one Fill and Debridge pocket along with the Thermal Spacer, providing two Thermal Break Points. Dual colors can be achieved by specifying different finishes for the exterior face covers and interior mullions. Two piece horizontals and extruded Shear Blocks allow for a concealed horizontal to vertical joinery without exposed screws. These joint intersections also have concealed injection molded End Dams for controlling any infiltrated water.

NOTE: To accelerate installation times with pinpoint accuracy of Horizontal Shear Blocks to Curtain Wall Mullions see pages 56-P1 and 57-P1.

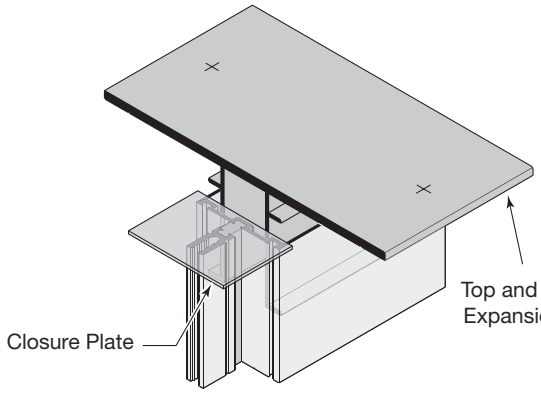

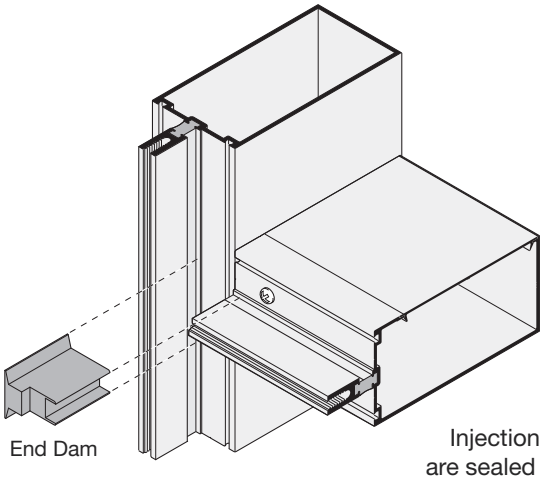

Injection Molded End Dams are sealed in place to control infiltrated water.

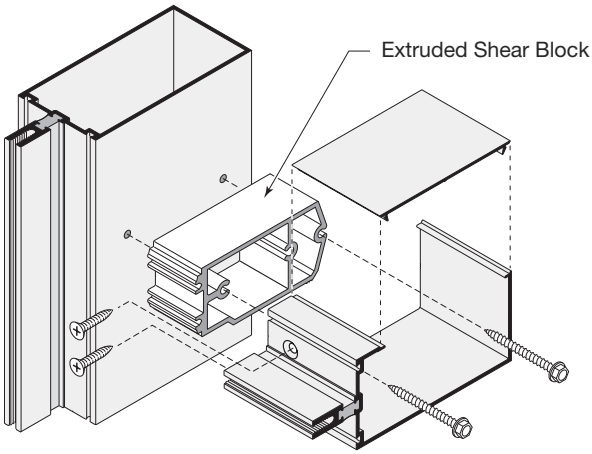

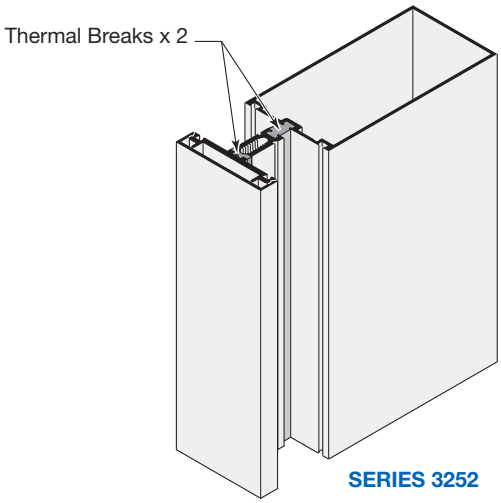

CURTAIN WALLS

Typical Details

VERTICAL, HORIZONTAL MULLIONS AND INSIDE, OUTSIDE CORNERS FOR 1" (25) GLAZING

NOTE: Part numbers shown are available in 24' (7.3 m) stock lengths. Visit **usalum.com** for more information.

High Performance Thermally Broken

- Series 3252
- Series 3252SG

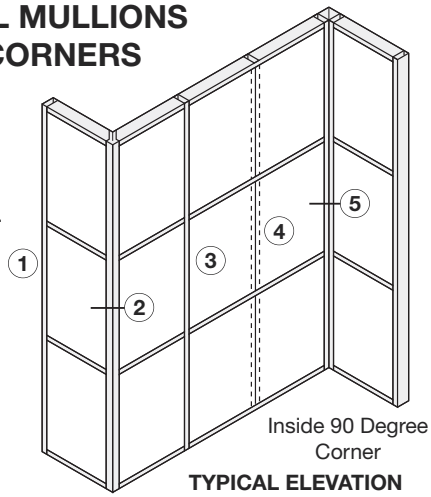

TYPICAL ELEVATION

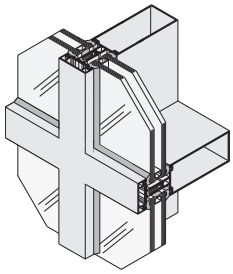

SERIES 3252
Captured Vertical Glazed Curtain Wall

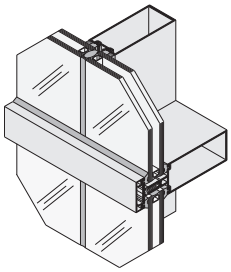

SERIES 3252SG
Structural Silicone Vertical Glazed Curtain Wall

Top and Bottom Anchors
AP960 @ Outside 90 Degree
AP975 @ Inside 90 Degree
5" (127) Back Member

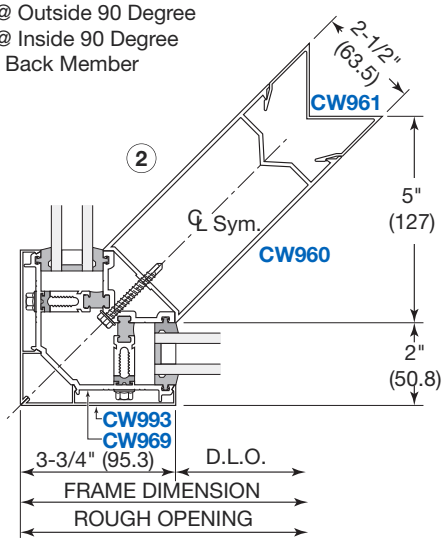

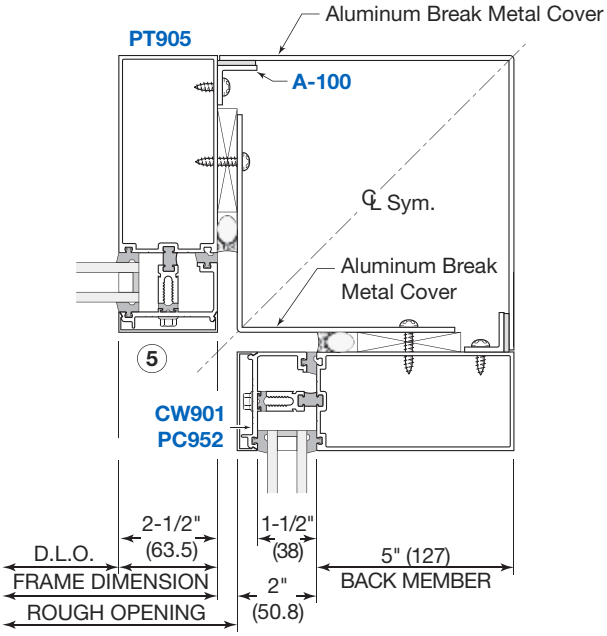

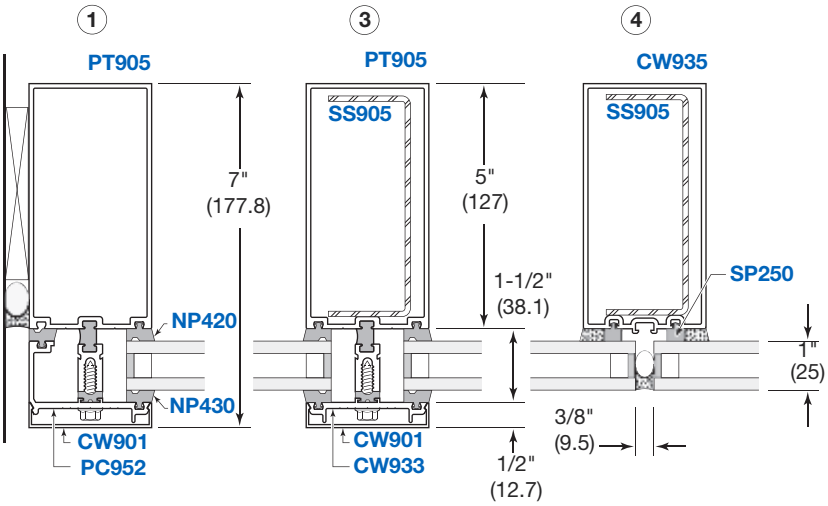

NOT TO SCALE

CURTAIN WALLS

Typical Details

High Performance Thermally Broken
- Series 3252
- Series 3252SG

OPEN BACK AND TUBULAR HORIZONTAL MULLIONS FOR 1" (25) GLAZING

NOTE: Part numbers shown are available in 24' (7.3 m) stock lengths. Visit **usalum.com** for more information.

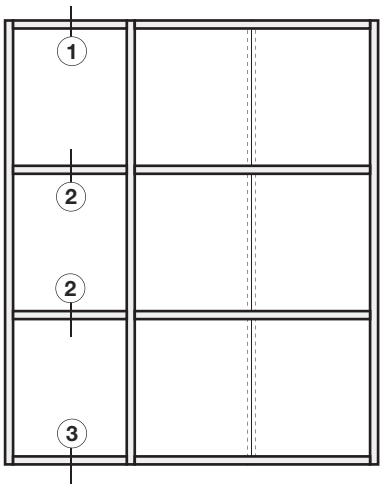

TYPICAL ELEVATION

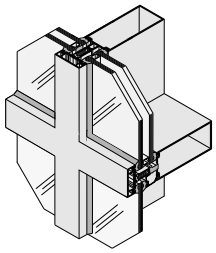

SERIES 3252
Captured Vertical Glazed Curtain Wall

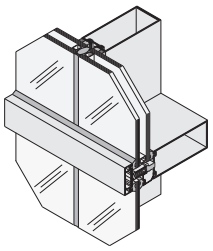

SERIES 3252SG
Structural Silicone Vertical Glazed Curtain Wall

NOTE: Tubular Horizontals Must be Used When Span Exceeds 6'-0" (1.83 m) or if Deadload Exceeds 250 lbs. (113.4 Kg).

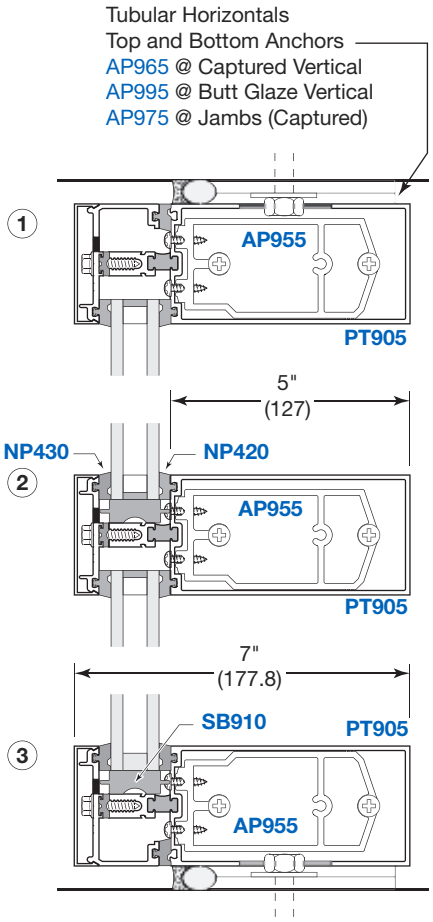

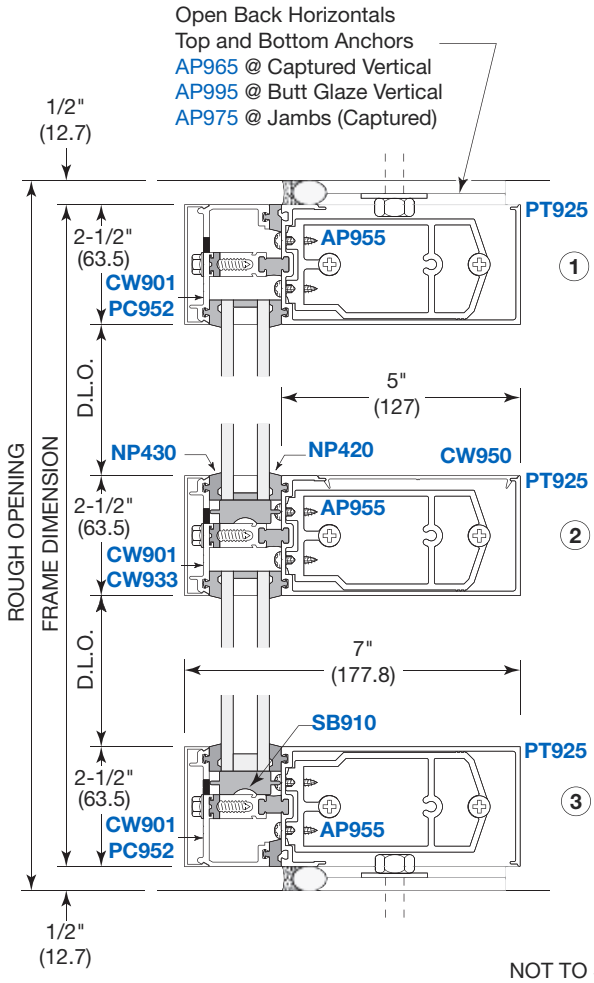

NOT TO SCALE

CURTAIN WALLS

Typical Details

High Performance Thermally Broken
- Series 3252
- Series 3252SG

1" (25) TO 1/4" (6) TRANSITION GLAZING

5" (127) Back Member Shown; Other Sizes Available Upon Request.

NOTE: Part numbers shown are available in 24' (7.3 m) stock lengths. Visit usalum.com for more information.

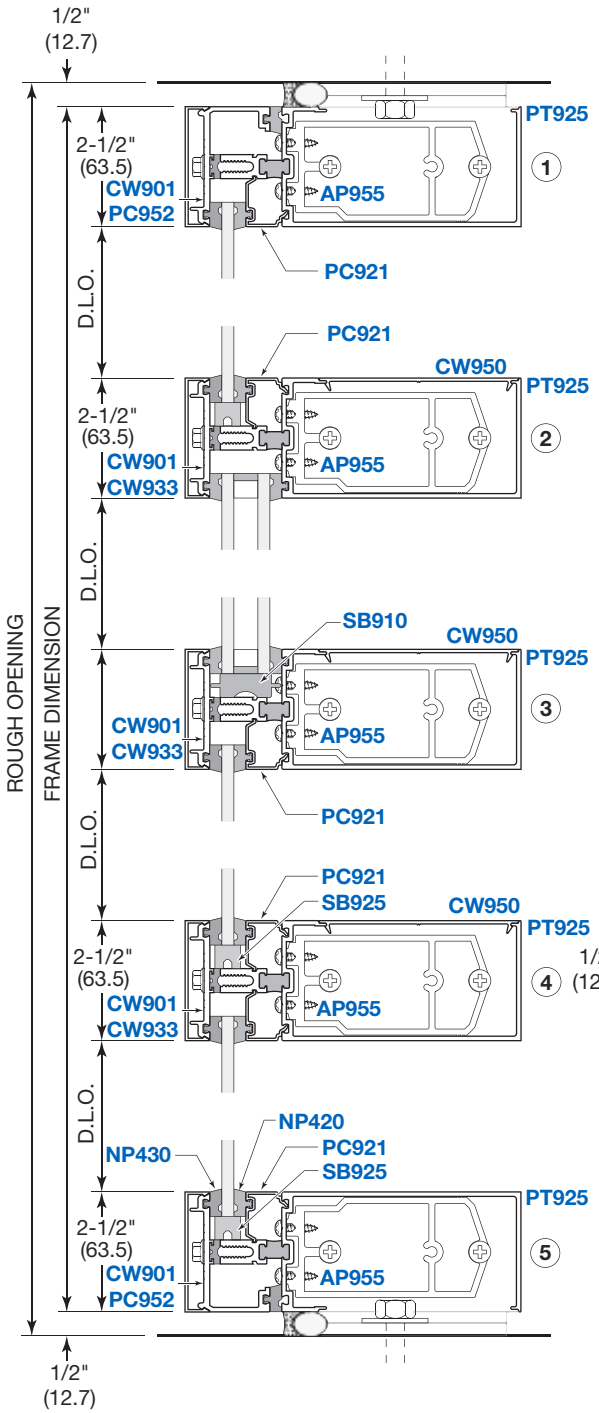

NOT TO SCALE

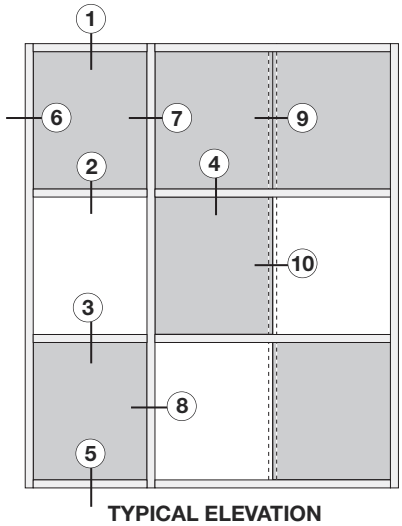

TYPICAL ELEVATION

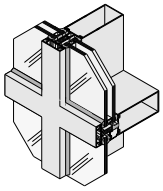

SERIES 3252
Captured Vertical Glazed Curtain Wall

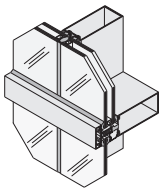

SERIES 3252SG
Structural Silicone Vertical Glazed Curtain Wall

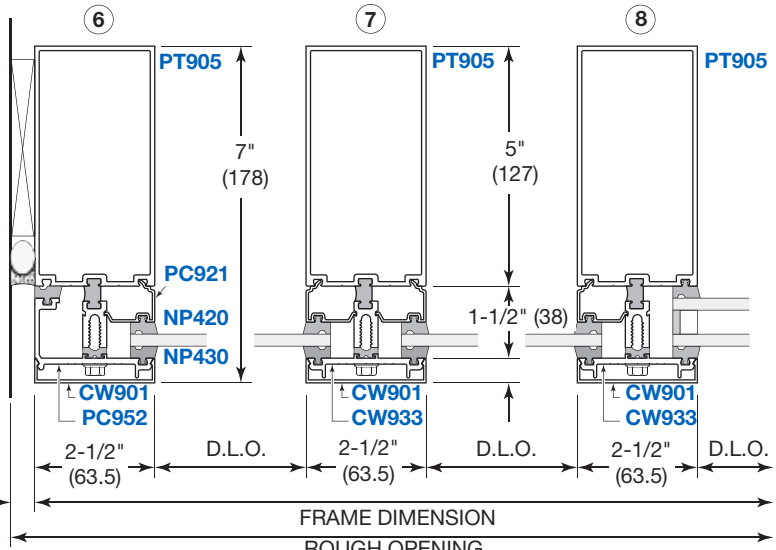

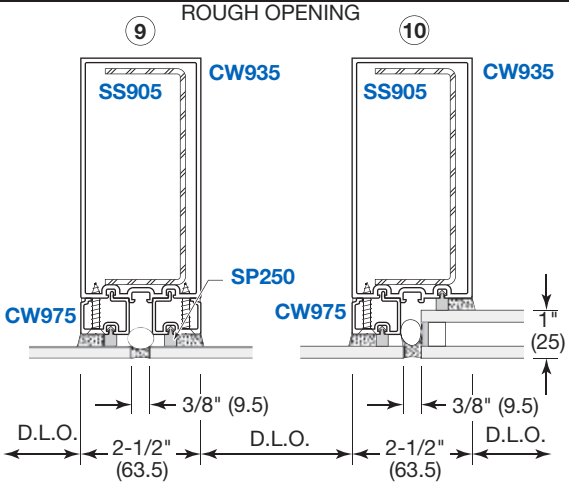

CURTAIN WALLS

Typical Details

High Performance Thermally Broken • Series 3252

THERMAL ENTRANCE WITH FLUSH DOOR ADAPTOR

Series 3252 Curtain Wall Shown With Series 400-T Medium Stile Thermal Entrance Door.

Series 400-T Medium Stile and 550-T Wide Stile Thermal Entrances are Standard. Series 250, 400, and 550 Non-Thermal Entrances Available on Request.

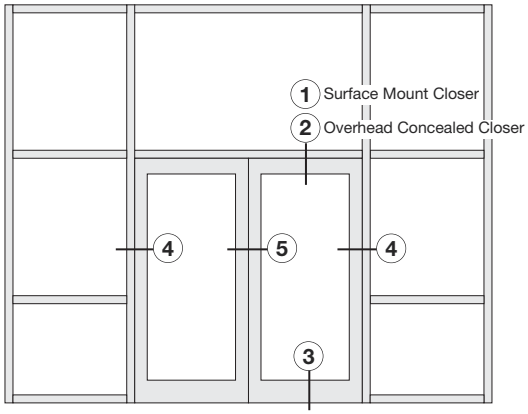

TYPICAL ELEVATION

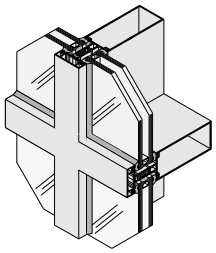

Captured Vertical Glazed Curtain Wall

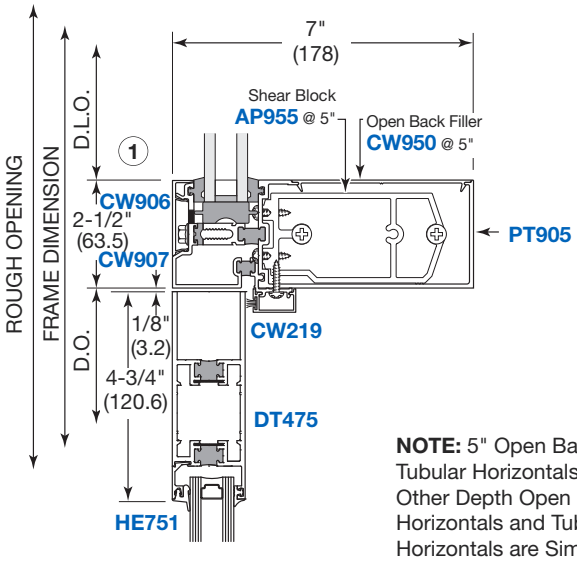

NOTE: 5" Open Back and Tubular Horizontals Shown. Other Depth Open Back Horizontals and Tubular Horizontals are Similar.

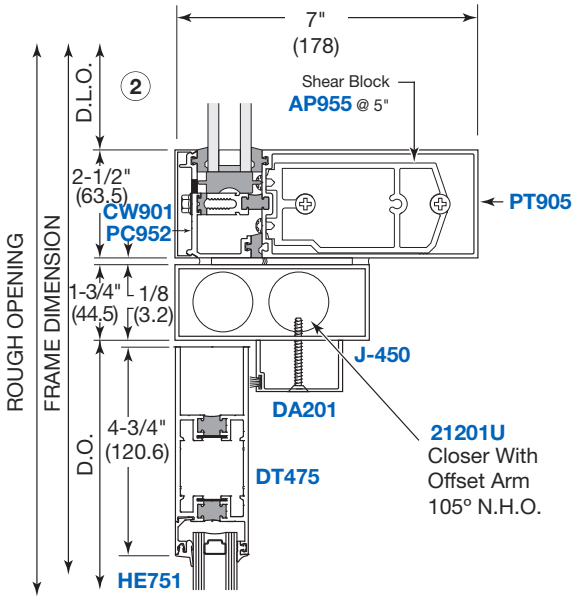

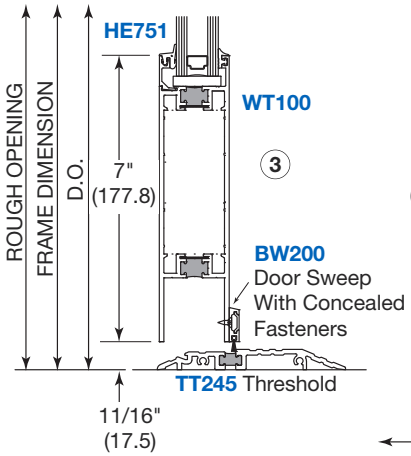

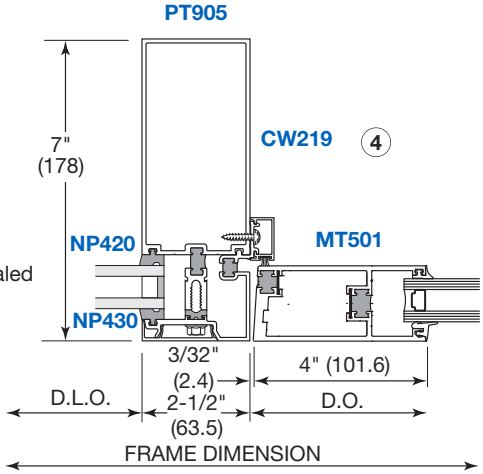

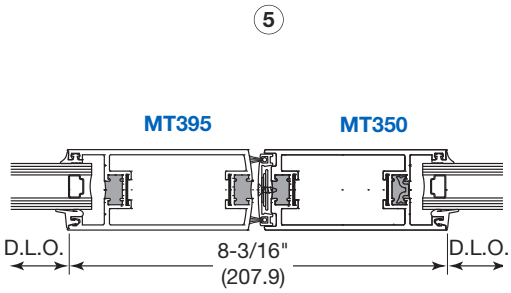

NOT TO SCALE

CURTAIN WALLS

Typical Details

THERMAL ENTRANCE WITH SUB-FRAME

High Performance Thermally Broken • Series 3252

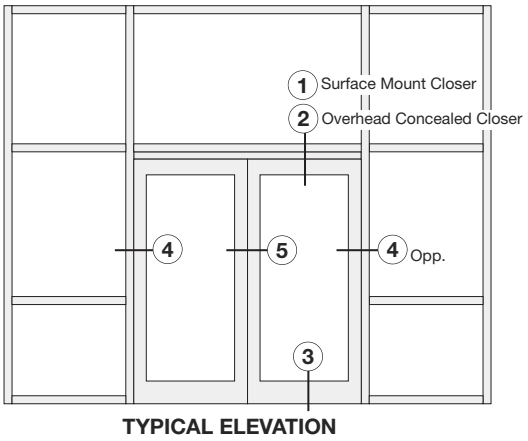

TYPICAL ELEVATION

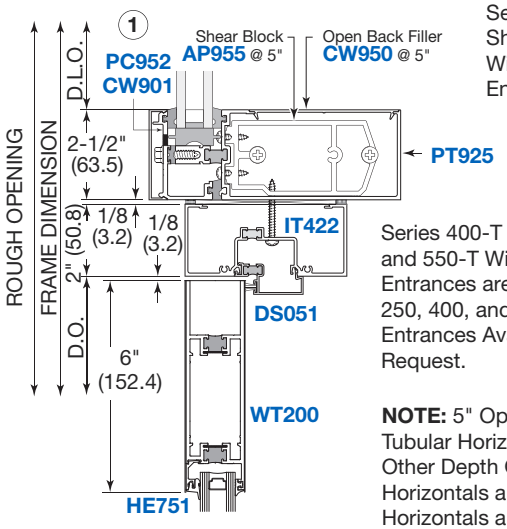

Series 3252 Curtain Wall Shown With Series 550-T Wide Stile Thermal Entrance Door.

Series 400-T Medium Stile and 550-T Wide Stile Thermal Entrances are Standard. Series 250, 400, and 550 Non-Thermal Entrances Available Upon Request.

NOTE: 5" Open Back and Tubular Horizontals Shown. Other Depth Open Back Horizontals and Tubular Horizontals are Similar.

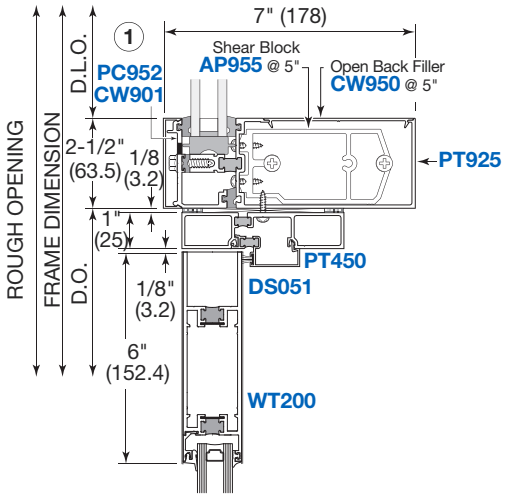

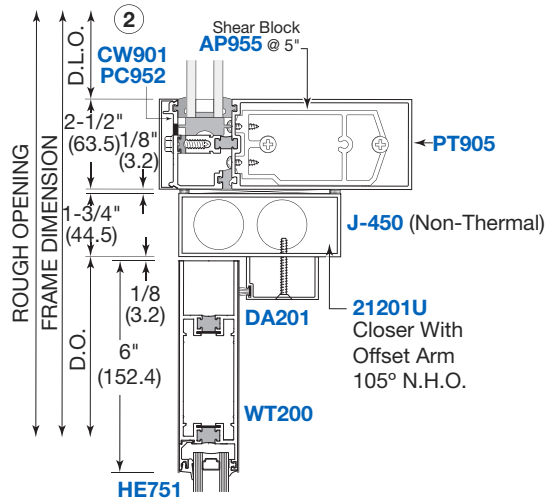

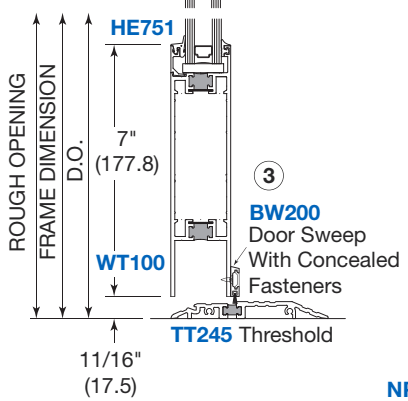

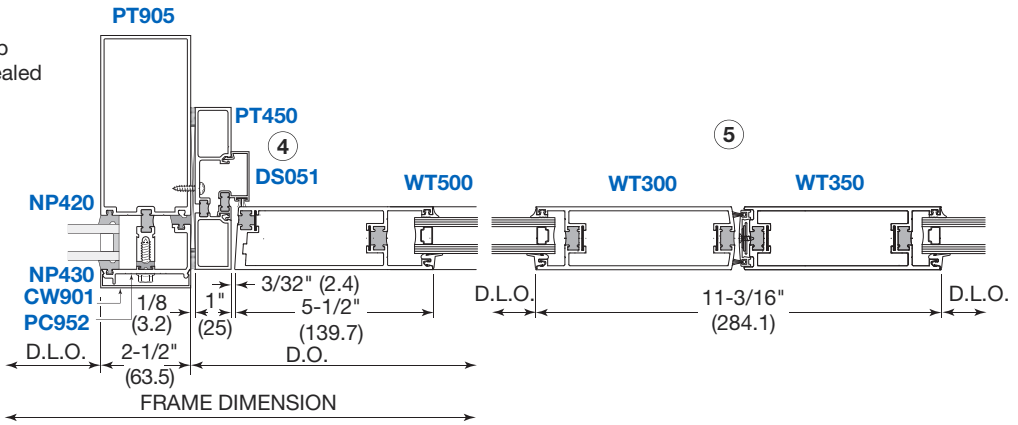

NOT TO SCALE

CURTAIN WALLS

Windload Charts

CAPTURED VERTICAL MULLIONS FOR 1" (25) GLAZING

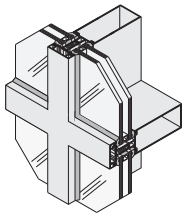

SERIES 3252
Captured Glazed Curtain Wall

High Performance Thermally Broken

- **Series 3252**
- **Series 3252SG**

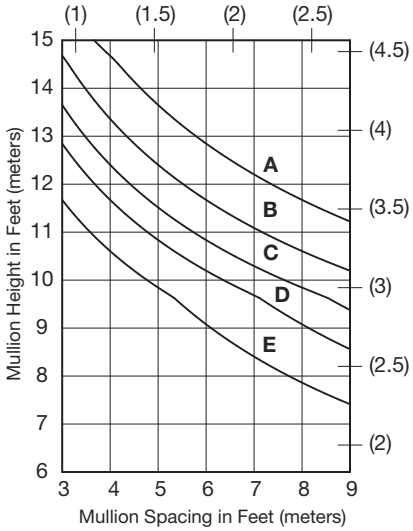

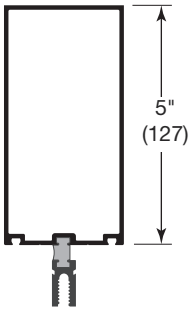

PT905
I_{xx} = 6.261
S_{xx} = 1.978

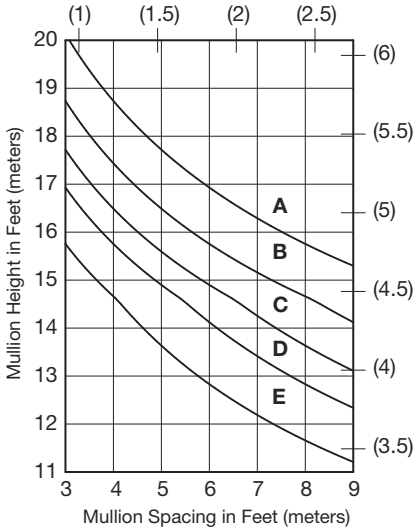

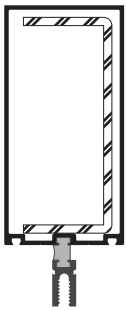

PT905 With **SS905**
I_{xx} = 6.261
S_{xx} = 1.978
SS905 Steel
I_{xx} = 3.577
S_{xx} = 1.590

CURVE **A** = 15 PSF (718 Pa)
CURVE **B** = 20 PSF (957 Pa)
CURVE **C** = 25 PSF (1197 Pa)
CURVE **D** = 30 PSF (1436 Pa)
CURVE **E** = 40 PSF(1915 Pa)

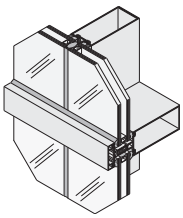

SERIES 3252SG
Structural Silicone Vertical Glazed Curtain Wall

STRUCTURAL GLAZE VERTICAL MULLIONS FOR 1" (25) GLAZING

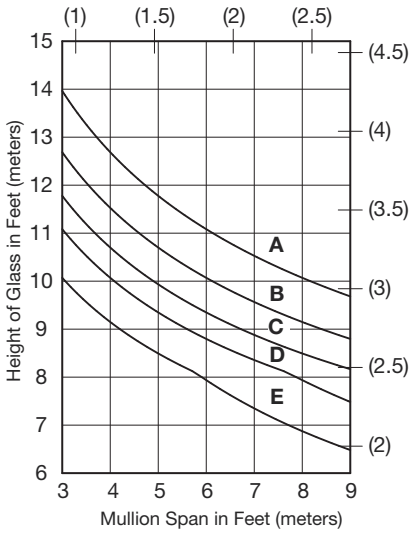

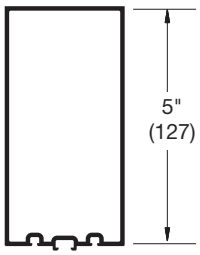

CW935
I_{xx} = 4.020
S_{xx} = 1.512

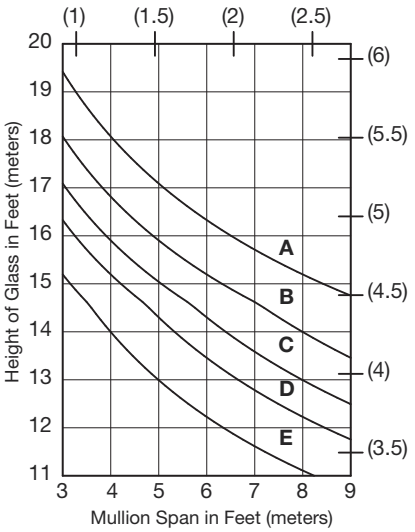

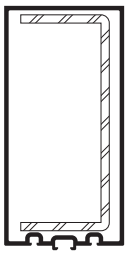

CW935 With **SS905**
I_{xx} = 4.020
S_{xx} = 1.512
SS905 Steel
I_{xx} = 3.577
S_{xx} = 1.590

CURTAIN WALLS

Deadload Charts

High Performance Thermally Broken
- **Series 3252**
- **Series 3252SG**

OPEN BACK HORIZONTAL MULLIONS FOR 1" (25) GLAZING

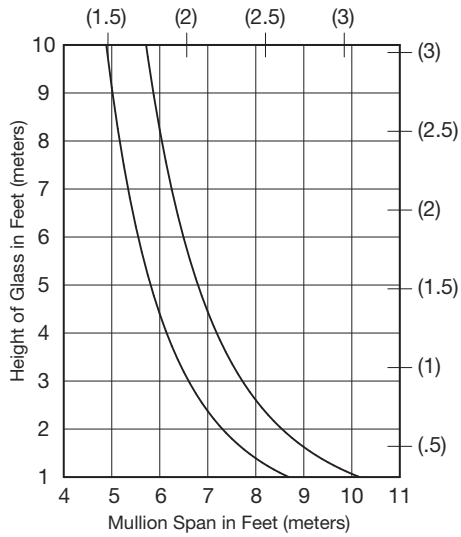

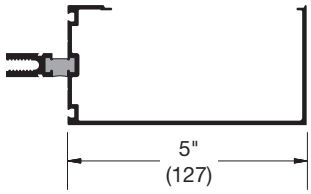

PT925
I_{yy} = 0.916
S_{yy} = 0.584

CURVES **A** = 1/4 point loading
CURVES **B** = 1/8 point loading

Calculated using glass weights of:
Glass Weight @ 6.5 lbs/sf

TUBULAR HORIZONTAL MULLIONS FOR 1" (25) GLAZING

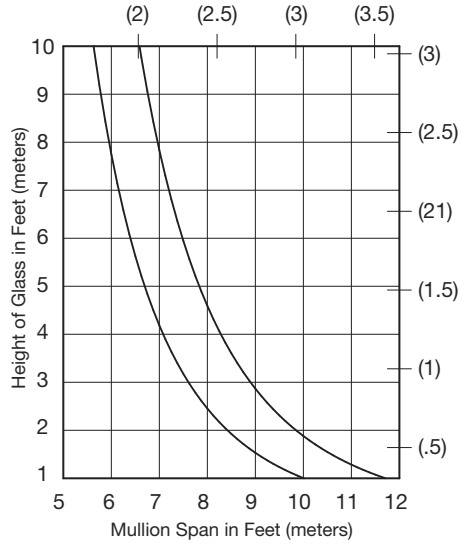

PT905
I_{yy} = 1.616
S_{yy} = 1.290

CRL U.S. ALUMINUM

CURTAIN WALLS

Accessories

FOR 5" (127) MULLION DEPTHS

High Performance Thermally Broken
- Series 3252
- Series 3252SG

PART NO.	DETAIL	DESCRIPTION	PKG. QTY.
AP955	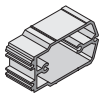	Intermediate Shear Block. (Includes screws)	20
AP926	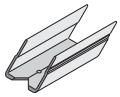	Shear Block for Inside and Outside Corners. (Includes screws)	20
AP975	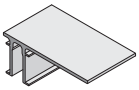	Wall Jamb Anchor at Head and Sill for PT905	6
AP965	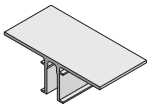	Intermediate Vertical Anchor at Head and Sill for PT905	12
AP995	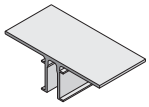	Intermediate Vertical Anchor at Head and Sill for CW935	12
AP960	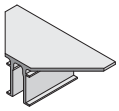	Outside 90 Degree Corner Anchor at Head and Sill for CW960	10
SL935	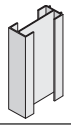	Mullion Splice Sleeve for CW935	12
SL945	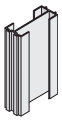	Mullion Splice Sleeve for PT905	12
SL960	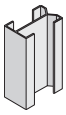	Outside 90 Degree Corner Mullion Splice Sleeve for CW960	5
CP900	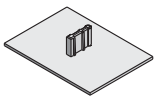	Closure Plate for Captured Mullions	50
CP951	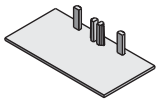	Closure Plate for Butt Glaze Mullions	50
CP953	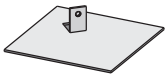	Closure Plate For Outside Corner	10

PART NO.	DETAIL	DESCRIPTION	PKG. QTY.
HD975		End Dam for Captured Mullions	50
WD900	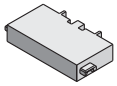	End Dam for Butt Glaze Mullions	50
WD961		Water Dam For Outside Corner	10
CW368		Temporary Glass Retainer for Captured Mullions	50
RG935	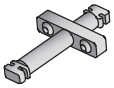	Temporary Glass Retainer for Butt Glaze. Patent No. D295,952	50
SB925	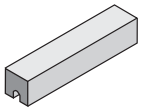	Setting Block for 1/4" (6) Glass; 4" (101.6) Long	100
AW900		Edge Block for 1/4" (6) Glass; 2-1/2" (63.5) Long	50
SB910	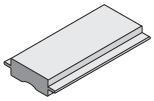	Setting Block for 1" (25) Glass; 4" (101.6) Long	100
AW901	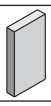	Edge Block for 1" (25) Glass; 2-1/2" (63.5) Long	100
NP430		Exterior Gasket	250' Roll
NP420		Interior Gasket	250' Roll
SP450		Spacer Gasket for Butt Glaze	250' Roll
MS222		Screw for Pressure Bar 1/4"-20 x 1" (25) HWHCS with SRG5	200

CURTAIN WALLS

Table of Contents

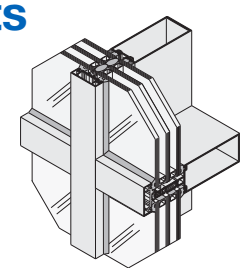

SERIES HP3253
High Performance Captured
Vertical Glazed Curtain Wall

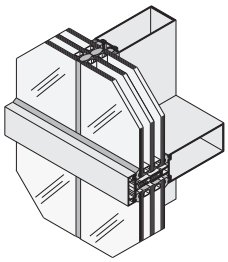

SERIES HP3253SG
High Performance Structural Silicone
Vertical Glazed Curtain Wall

High Performance Thermally Broken

- **Series HP3253**
- **Series HP3253SG**

Patent No. 7,975,442

Section J5 **Page**

SPECIFICATIONS....02-J5
TECHNICAL DATA....03-J5
SPECIAL FEATURES....04-J5
TYPICAL DETAILS....05-J5 thru 11-J5
WINDLOAD CHARTS....12-J5
DEADLOAD CHARTS....13-J5
ACCESSORIES....14-J5

Project: Knoxville Convention Center; Knoxville, TN

Due to the diversity in state/provincial, local, and federal laws and codes that govern the design and application of architectural products, it is the responsibility of the individual architect, owner, and installer to ensure that products selected for use on projects comply with all applicable building codes and laws. U.S. Aluminum exercises no control over the use or application of its products, glazing materials, and operating hardware, and assumes no responsibility thereof.

The rapidly changing technology within the architectural aluminum products industry demands that U.S. Aluminum reserve the right to revise, discontinue or change any product line, specification or electronic media without prior written notice.

NOTE: Dimensions in parentheses ( ) are millimeters unless otherwise noted.
Other metric units shown in this publication are:

m - meter	Kg - kilogram
Pa - pascal	KPa - kilopascal
MPa - megapascal	

CURTAIN WALLS

Specifications

High Performance Thermally Broken
- Series HP3253
- Series HP3253SG

Patent No. 7,975,442

SECTION 08 44 13 ALUMINUM CURTAIN WALL SYSTEMS

I. GENERAL DESCRIPTION
Work Included: Furnish all necessary materials, labor, and equipment for the complete installation of aluminum framing as shown on the drawings and specified herein. (Specifier Note: It is suggested that related items such as aluminum entrance doors, glass, and sealants be included whenever possible.)
Work Not Included: Structural support of the framing system, interior closures, and trim. (Specifier list other exclusions). Related Work Specified Elsewhere: (Specifier list)

QUALITY ASSURANCE
Drawings and specifications are based on the High Performance Triple Glaze Series HP3253 Curtain Wall System as manufactured by U.S. Aluminum. Whenever substitute products are to be considered, supporting technical literature, samples, drawings, and performance data must be submitted 10 days prior to bid in order to make a valid comparison of the products involved.

PERFORMANCE REQUIREMENTS
Air Infiltration: shall be tested in accordance with ASTM E283. Infiltration shall not exceed .06 CFM per square foot (.0003m3/ sm2) fixed area when tested at 6.24 psf (300 Pa).
Water Infiltration: shall be tested in accordance with ASTM E331. No water penetration at test pressure of 15 psf (718 Pa).
Structural Performance: shall be tested in accordance with ASTM E330 and based on:
- Maximum deflection of L/175 of the span
- Allowable stress with a safety factor of 1.65

The system shall perform to this criteria under a windload of *(Specify)* psf. System shall exceed maximum seismic lateral displacement requirements specified in section 1628.8.2 of the Uniform Building Code, 1994 edition. Upon successful completion of the Phase I seismic testing, the curtain wall shall once again be subjected to and must successfully pass the air and water infiltration tests specified above before proceeding to Phase II testing.
Thermal Performance: Series HP3253 shall be tested in accordance with NFRC. NFRC's Condensation Resistance rating is NOT equivalent to a Condensation Resistance Factor (CRF) determined in accordance with AAMA 1503, and NFRC-100.
Testing Procedures: ASTM 283, E 331, and E 330 - Laboratory performance testing. AAMA 503-08 - Newly installed curtain walls. AAMA 511-08 - Installed curtain walls after six months.

II. PRODUCTS MATERIALS
Extrusions shall be 6063-T6 alloy and temper (ASTM B221 alloy T5 temper). Fasteners, where exposed, shall be aluminum, stainless steel or zinc plated steel in accordance with ASTM A 164. Perimeter anchors shall be aluminum or steel, providing the steel is properly isolated from the aluminum. For vertical silicone glazing, system shall provide conventional glass support at horizontal and perimeter members, and structural silicone support at intermediate verticals. Horizontal members and jamb configurations shall allow for pockets to receive E.P.D.M. elastomeric extruded glazing gaskets. Interior vertical glass spacers shall be extruded silicone compatible E.P.D.M. All materials that come in contact with the silicone should be tested for compatibility. Samples of aluminum vertical mullions should be submitted to the silicone manufacturer for adhesion evaluation.

FINISH
All exposed framing surfaces shall be free of scratches and other serious blemishes. Aluminum extrusions shall be given a caustic etch followed by an anodic oxide treatment to obtain...
(Specify one of the following):
_____#11 Clear anodic coating
_____#22 Dark Bronze anodic coating
_____#33 Black anodic coating
Fluoropolymer paint coating conforming with the requirements of AAMA 2605. Color shall be *(Specify a U.S. Aluminum standard color).*

FABRICATION
All mullions and horizontals shall have flexible polyurethane thermal break material located on exterior side of glass plane. Exterior glazing seal gasket shall be secured by extruded aluminum pressure plates fastened to main grid members. Provisions shall be made at all sealed horizontals to weep moisture accumulation to the exterior. A cover shall be snapped over pressure plate to show only a sharp, uninterrupted exterior profile. Framing members shall provide for straight in glazing on all sides, with through sight lines and no projecting stops or face joints. Vertical and horizontal framing members shall have a nominal width of 2-1/2" (63.5). Overall depth of system shall be *(Specify).* System shall provide for two piece horizontal framing so that all fasteners at intersection of horizontal and vertical members will be concealed.

III. EXECUTION INSTALLATION
All glass framing shall be set in correct locations as shown in the details and shall be level, square, plumb, and in alignment with other work in accordance with the manufacturer's installation instructions and approved shop drawings. All joints between framing and the building structure shall be sealed in order to secure a watertight installation.

PROTECTION AND CLEANING
After installation the General Contractor shall adequately protect exposed portions of aluminum surfaces from damage by grinding and polishing compounds, plaster, lime, acid, cement or other contaminants. The General Contractor shall be responsible for final cleaning.

CURTAIN WALLS

Technical Data

High Performance Thermally Broken

- Series HP3253
- Series HP3253SG

Patent No. 7,975,442

Series HP3253 Curtain Wall System brings ultra high thermal performance to your curtain wall options. Series HP3253 system utilizes 2" (51) triple pane glazing, and Series HP3253SG combines the horizontals mullions of the HP3253 with structural glazed vertical mullions.

HP3253 Size Specific U-Factor Matrix	
Center of Glass U-Factor	Overall* U-Factor
0.26 to 0.09	0.32 to 0.17

HP3253 Size SHGC Matrix	
Center of Glass SHGC	Overall* SHGC
0.65 to 0.05	0.60 to 0.06

HP3253 Size VT Matrix	
Center of Glass SHGC	Overall* SHGC
0.65 to 0.05	0.59 to 0.05

Size Specific U-Factor, SHGC, and VT Matrices are based on the standard Glazed Wall specimen size of 78.75" wide by 78.75" high (2000 mm x 2000 mm).* This represents 90.1% Vision Area / Total Area. Based on NFRC-100.

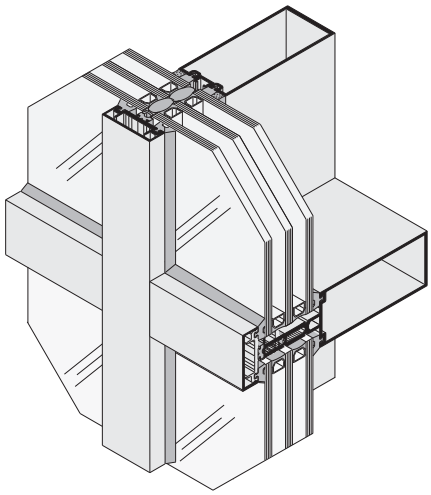

SERIES HP3253
High Performance Captured Vertical Glazed Curtain Wall

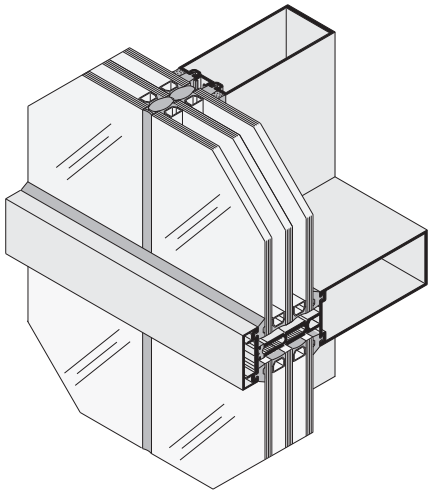

SERIES HP3253SG
High Performance Structural Silicone Vertical Glazed Curtain Wall

SERIES	WIDTH	DEPTHS#	GLAZING INFILL	APPLICATIONS
HP3253 HP3253SG	2-1/2" (63.5)	8" (203.2)	2" (51) Triple Pane Vision 1" (25) Double Pane Spandrel or 1/4" (6) Spandrel	Low-Rise to Mid-Rise Buildings Where High Performance Exterior Glazing is Required

Other depths available upon request

GLASS SIZES##	
Glass Width and Height	= Daylight Opening + 1" (25.4)

These formula do not take into account glass tolerances. Consult glass manufacturer before ordering glass.

CURTAIN WALLS

Special Features

- **Extruded Aluminum Mullion Anchors**
- **Extruded Shear Blocks are Furnished to Ensure Extra Strong Horizontal to Vertical Joinery**
- **Injection Molded End Dams and Closure Plates Used for Controlling Water Infiltration**

Complementing the efficiency of insulated glass, Series HP3253 High Performance Curtain Wall Systems are Thermally Broken by a continuous Thermal Spacer interlocked with pressure plates and our Fill and Debridge Technology. The HP3253 uses two Fill and Debridge pockets with the Thermal Spacer providing Three Thermal Break Points. Dual colors can be achieved by specifying different finishes for the exterior face covers and interior mullions. Two piece horizontals and extruded shear blocks allow for a concealed horizontal to vertical joinery without exposed screws. These joint intersections also have Concealed Injection Molded End Dams for controlling any infiltrated water. See page 14-J5 for additional information on accessories.

NOTE: To accelerate installation times with pinpoint accuracy of Horizontal Shear Blocks to Curtain Wall Mullions see pages 56-P1 and 57-P1.

High Performance Thermally Broken

- **Series HP3253**

Patent No. 7,975,442

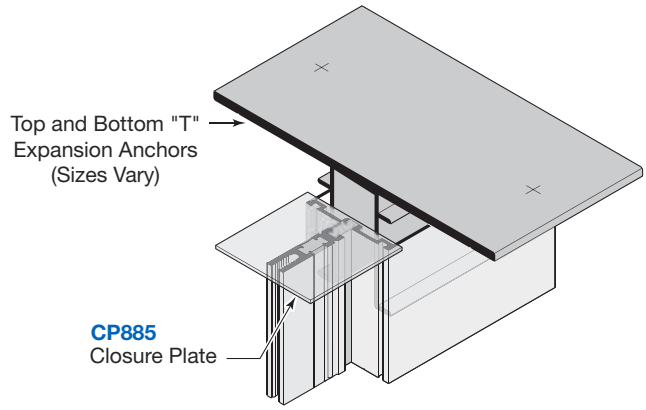

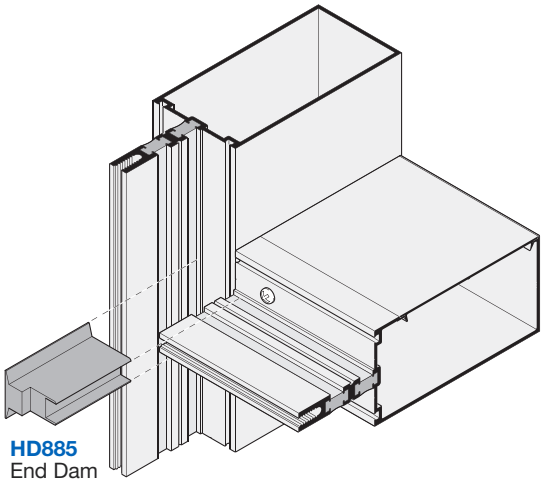

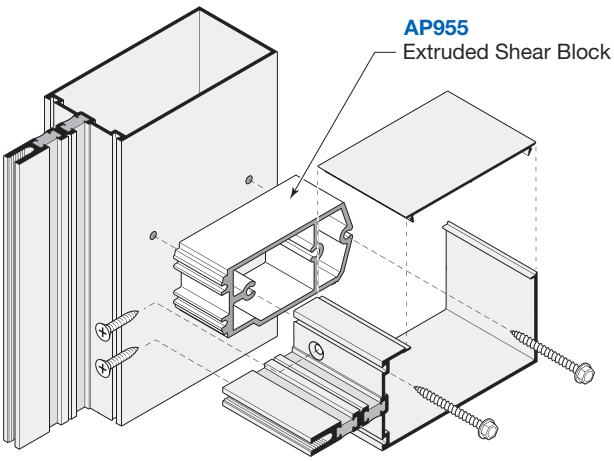

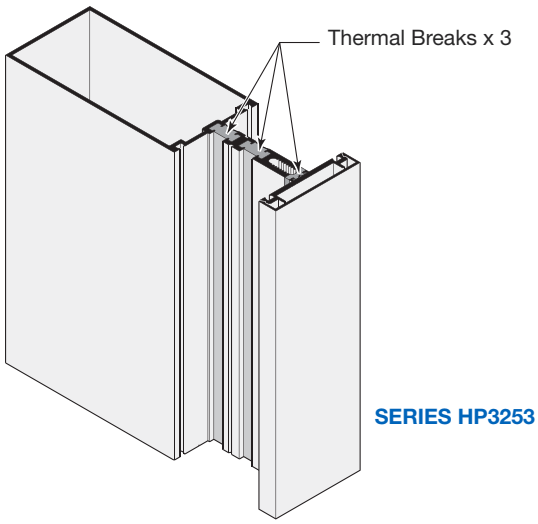

CURTAIN WALLS

Typical Details

VERTICAL MULLIONS FOR 2" (51) TRIPLE GLAZING

High Performance Thermally Broken

- Series HP3253
- Series HP3253SG

Patent No. 7,975,442

NOTE: Part numbers shown are available in 24' (7.3 m) stock lengths. Visit **usalum.com** for more information.

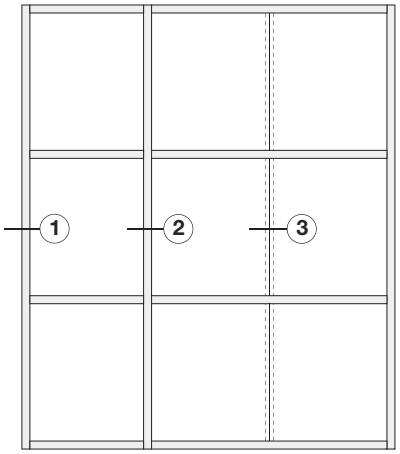

TYPICAL ELEVATION

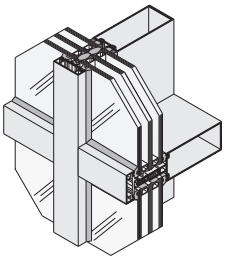

SERIES HP3253
Captured Vertical Glazed Curtain Wall

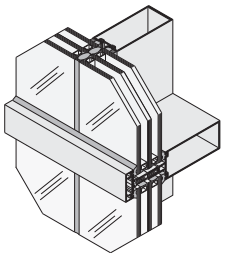

SERIES HP3253SG
Structural Silicone Vertical Glazed Curtain Wall

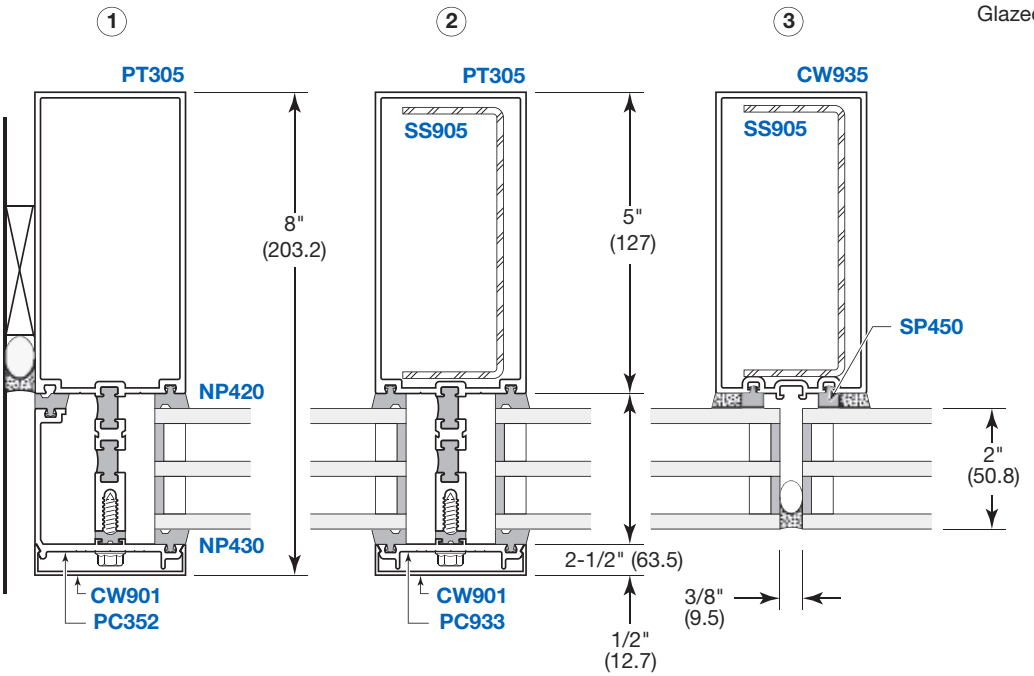

NOT TO SCALE

CURTAIN WALLS

Typical Details

5" (127) OPEN BACK AND TUBULAR HORIZONTAL MULLIONS FOR 2" (51) TRIPLE GLAZING

High Performance Thermally Broken

• Series HP3253

Patent No. 7,975,442

NOTE: Part numbers shown are available in 24' (7.3 m) stock lengths. Visit **usalum.com** for more information. Other size back members available upon request.

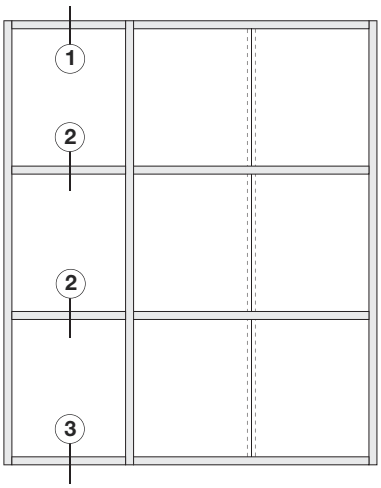

TYPICAL ELEVATION

NOTE: Tubular Horizontals Must be Used When Span Exceeds 6'-0" (1.83m) or if Deadload Exceeds 250 lbs. (113.4 Kg).

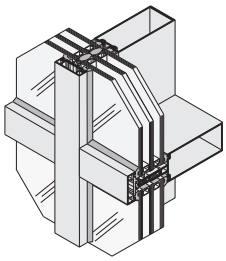

SERIES HP3253
Captured Glazed Curtain Wall

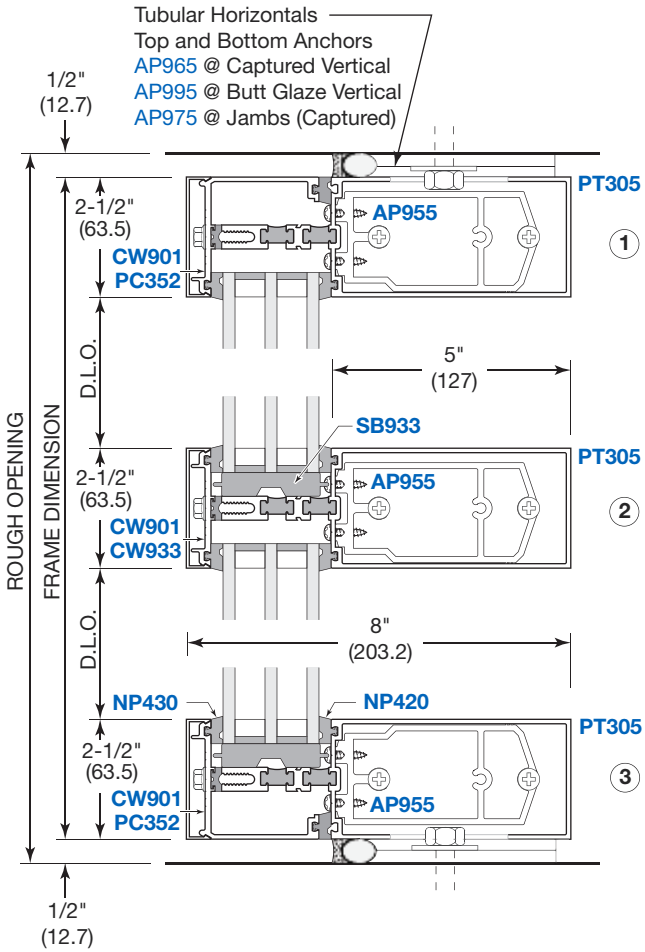

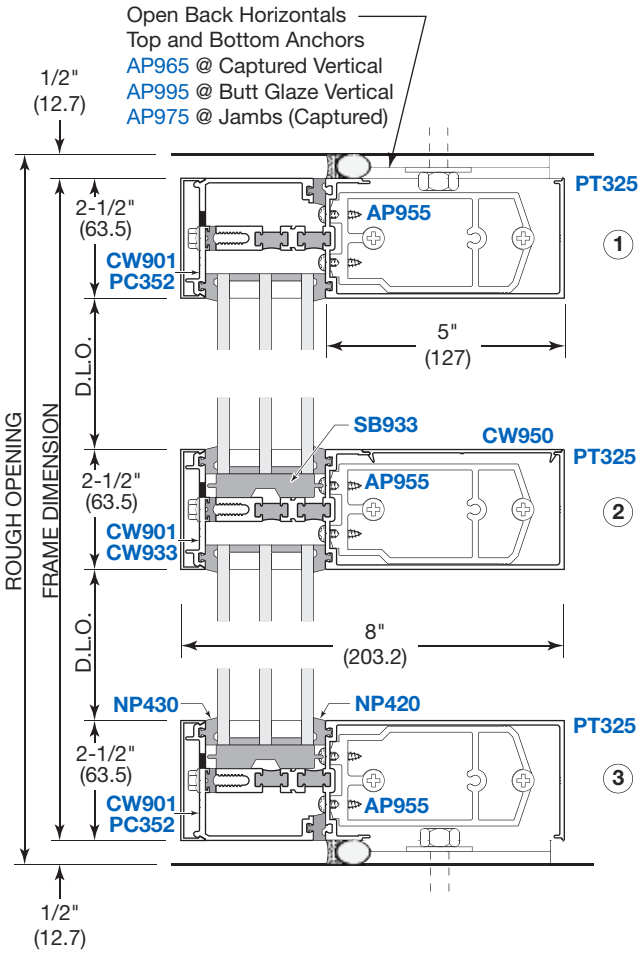

NOT TO SCALE

CURTAIN WALLS

Typical Details

2" (51) TO 1" (25) TRANSITION GLAZING

5" (127) Back Member Shown; Other Sizes Available Upon Request. Transitions are Similar.

High Performance Thermally Broken • Series HP3253

Patent No. 7,975,442

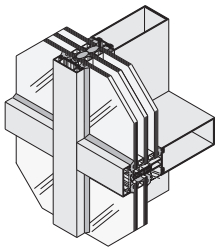

SERIES HP3253
Captured Vertical Glazed Curtain Wall

NOTE: Part numbers shown are available in 24' (7.3 m) stock lengths. Visit **usalum.com** for more information.

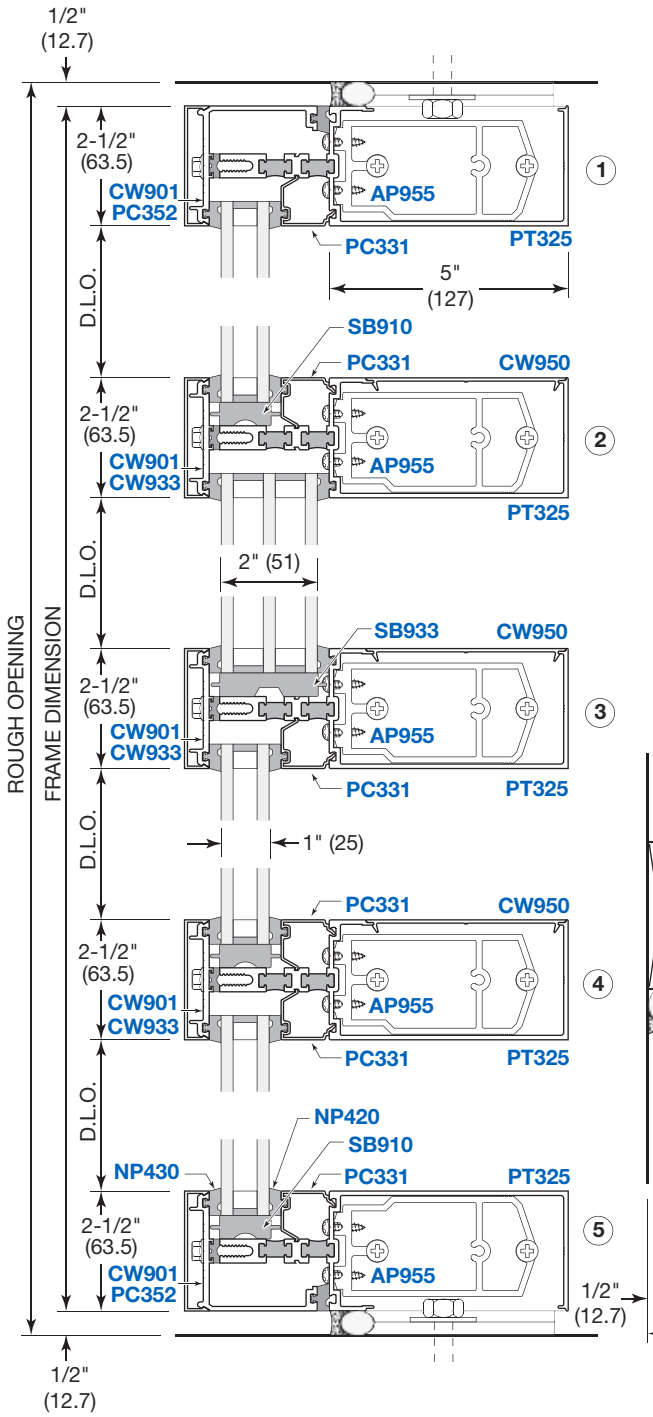

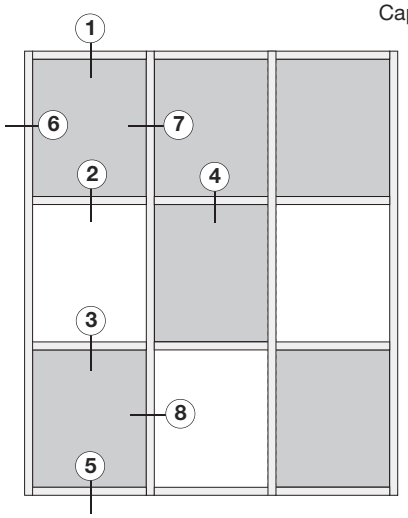

TYPICAL ELEVATION

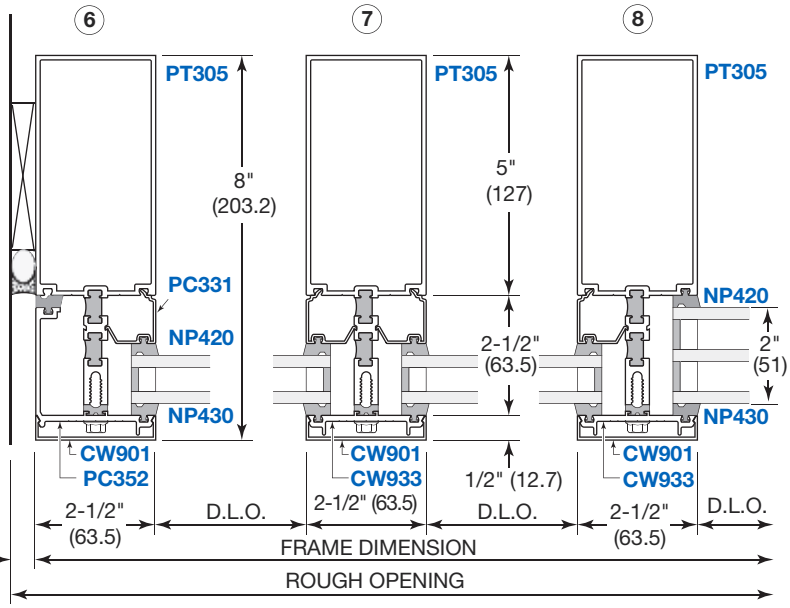

NOT TO SCALE

CURTAIN WALLS

Typical Details

High Performance Thermally Broken • Series HP3253

Patent No. 7,975,442

2" (51) TO 1/4" (6) TRANSITION GLAZING

5" (127) Back Member Shown; Other Sizes Available Upon Request. Transitions are Similar.

NOTE: Part numbers shown are available in 24' (7.3 m) stock lengths. Visit **usalum.com** for more information.

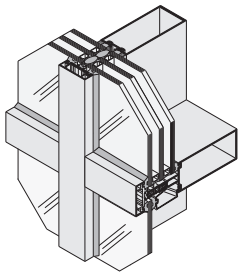

SERIES HP3253
Captured Glazed Curtain Wall

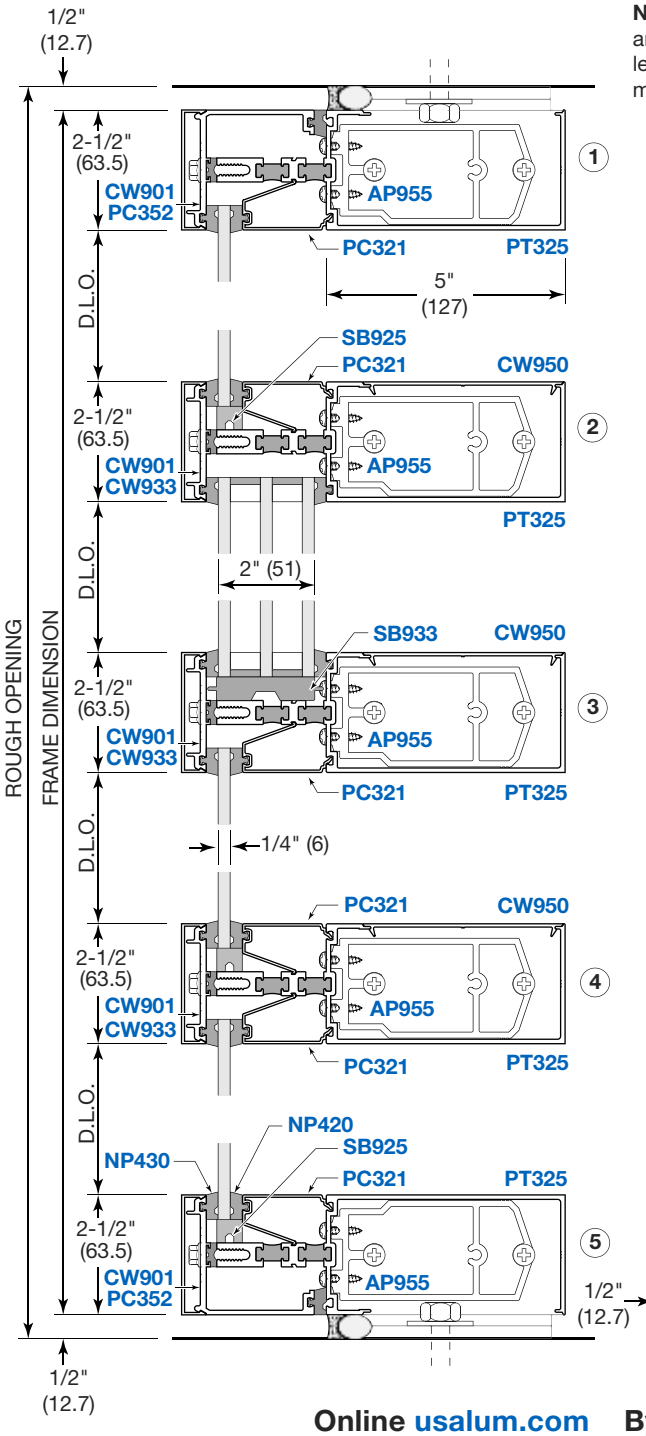

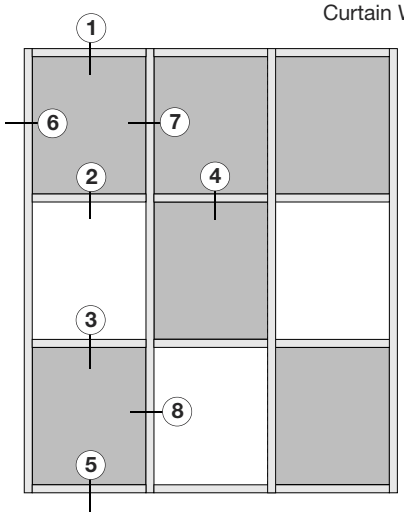

TYPICAL ELEVATION

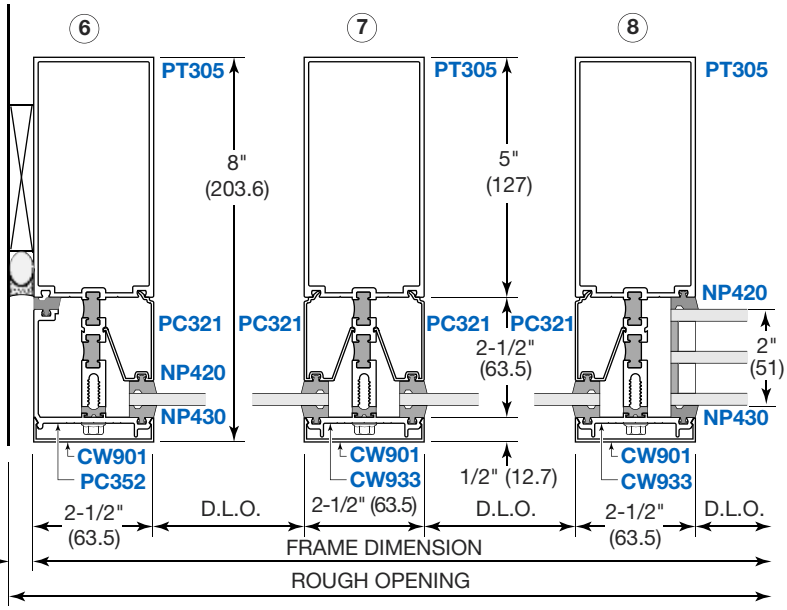

NOT TO SCALE

CURTAIN WALLS

Typical Details

INSIDE AND OUTSIDE CORNERS

NOTE: Part numbers shown are available in 24' (7.3 m) stock lengths. Visit **usalum.com** for more information.

High Performance Thermally Broken • Series HP3253

Patent No. 7,975,442

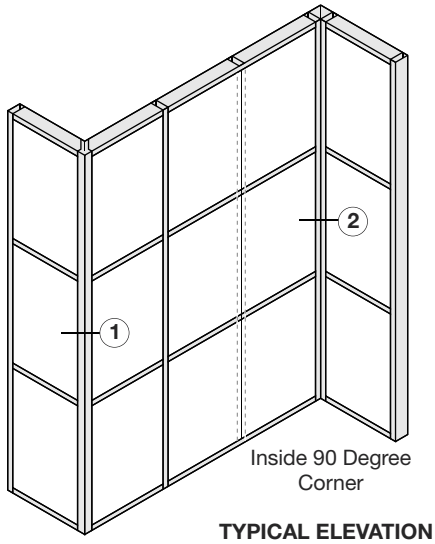

TYPICAL ELEVATION

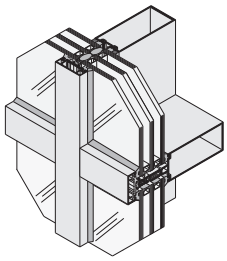

SERIES HP3253
Captured Glazed Curtain Wall

Top and Bottom Anchors
AP960 @ Outside 90 Degree
AP975 @ Inside 90 Degree 5" (127) Back Member

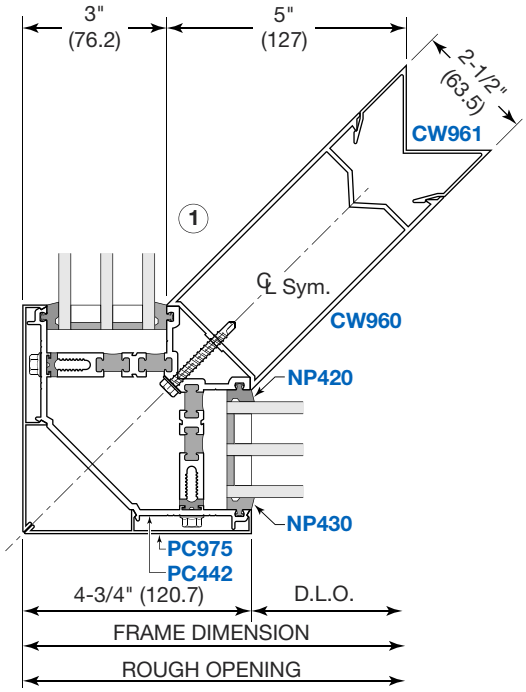

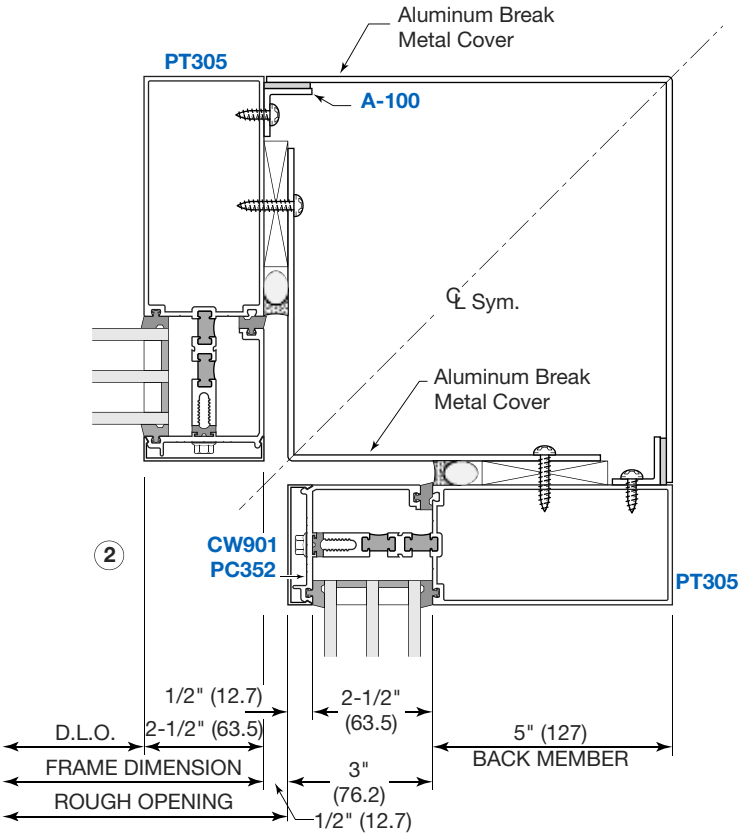

NOT TO SCALE

CURTAIN WALLS

Typical Details

THERMAL ENTRANCE WITH SUB-FRAME

High Performance Triple Thermally Broken

• Series HP3253

Patent No. 7,975,442

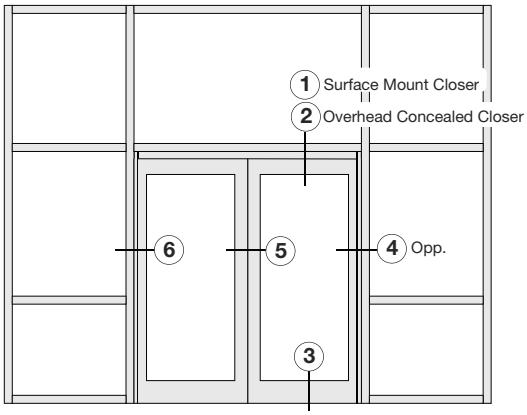

TYPICAL ELEVATION

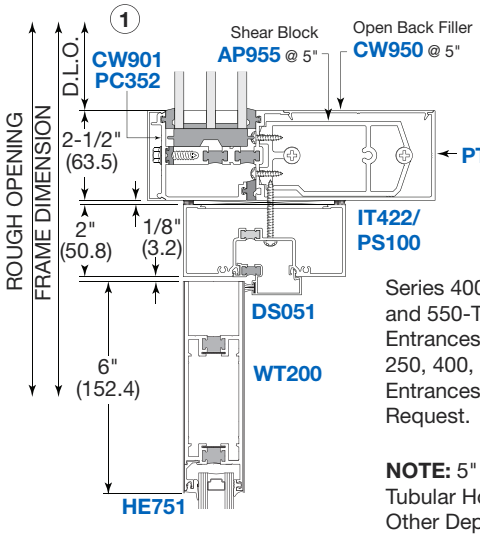

Series HP3253 Curtain Wall Shown With Series 550-T Wide Stile Thermal Entrance Door.

Series 400-T Medium Stile and 550-T Wide Stile Thermal Entrances are Standard. Series 250, 400, and 550 Non-Thermal Entrances Available Upon Request.

NOTE: 5" Open Back and Tubular Horizontals Shown. Other Depth Open Back Horizontals and Tubular Horizontals are Similar.

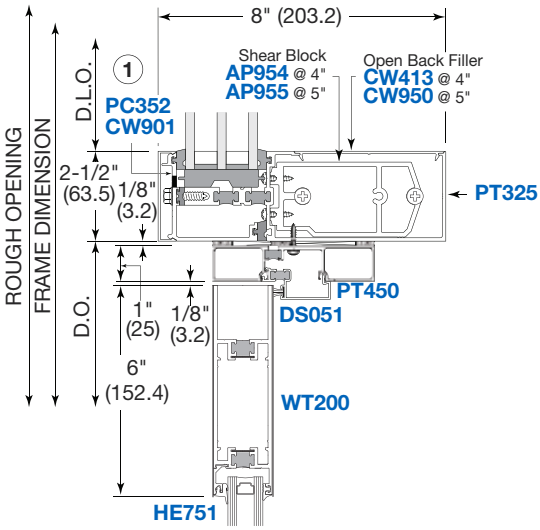

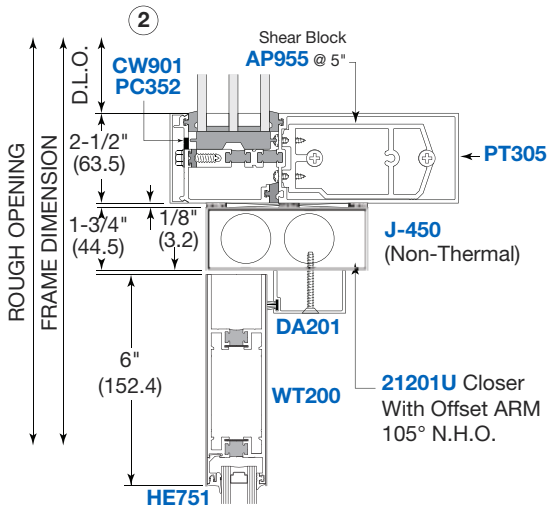

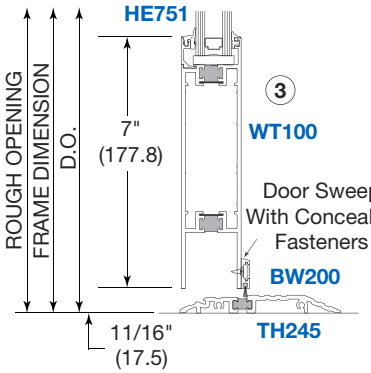

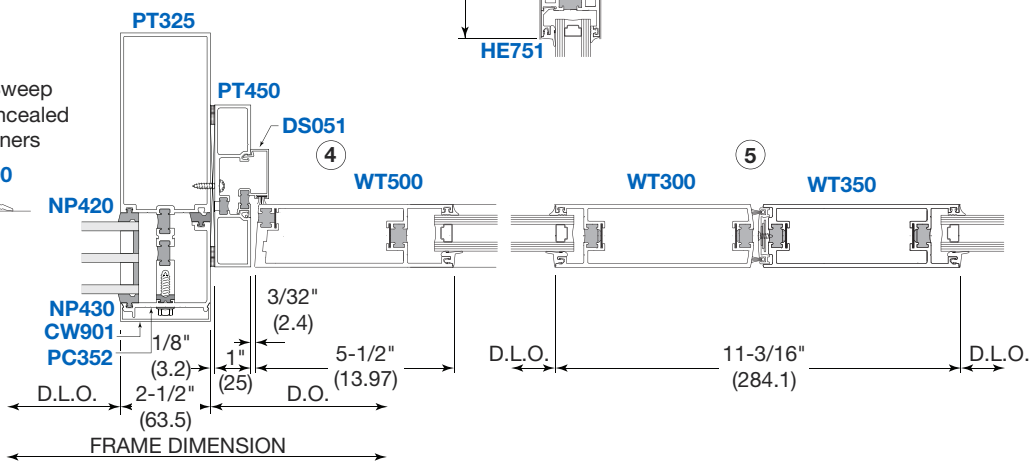

NOT TO SCALE

CURTAIN WALLS

Typical Details

MID-SPAN ANCHORS AND MULLIONS SPLICE

High Performance Thermally Broken

- Series HP3253
- Series HP3253SG

Patent No. 7,975,442

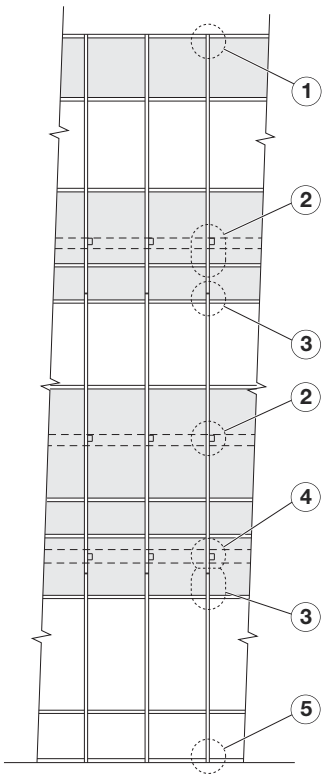

TYPICAL ELEVATION

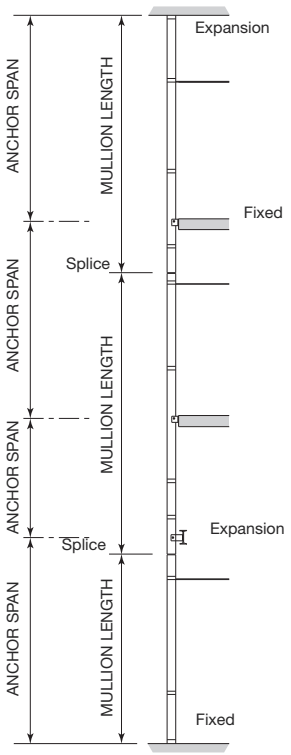

SECTION DETAIL

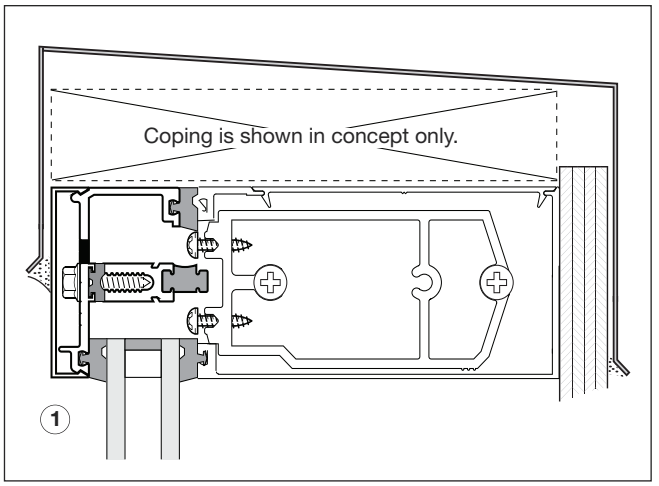

PARAPET DETAIL

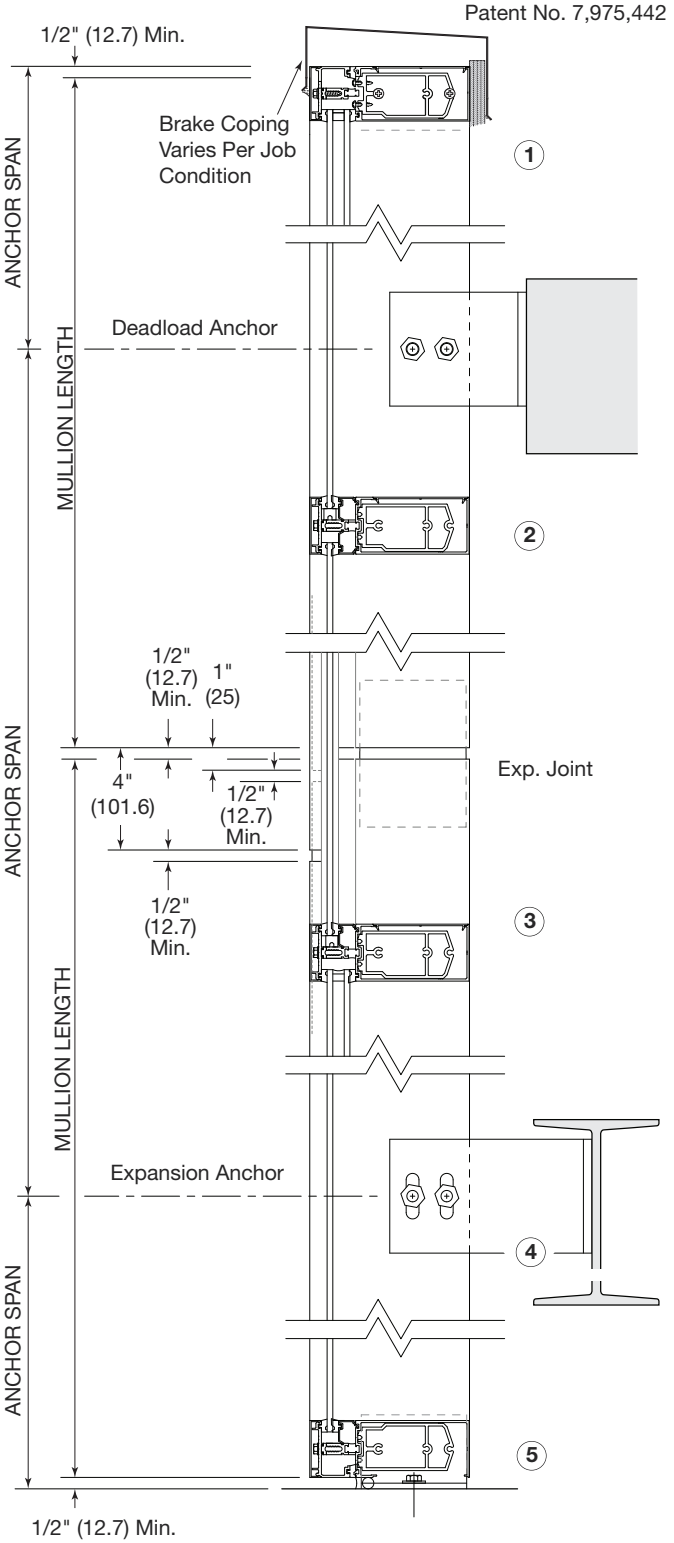

NOT TO SCALE

CURTAIN WALLS

Windload Charts

High Performance Thermally Broken

- **Series HP3253**
- **Series HP3253SG**

Patent No. 7,975,442

CAPTURED VERTICAL MULLIONS FOR 2" (51) TRIPLE GLAZING

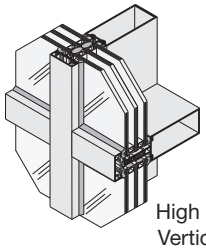

SERIES HP3253
High Performance Captured Vertical Glazed Curtain Wall

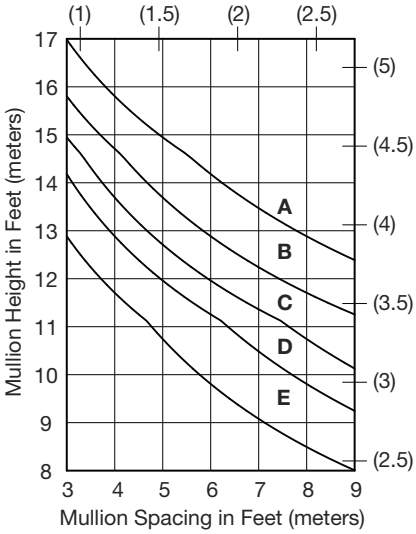

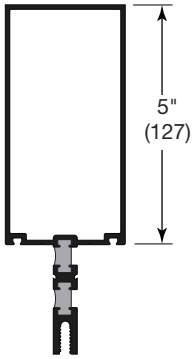

PW305
I_{xx} = 8.422
S_{xx} = 2.308

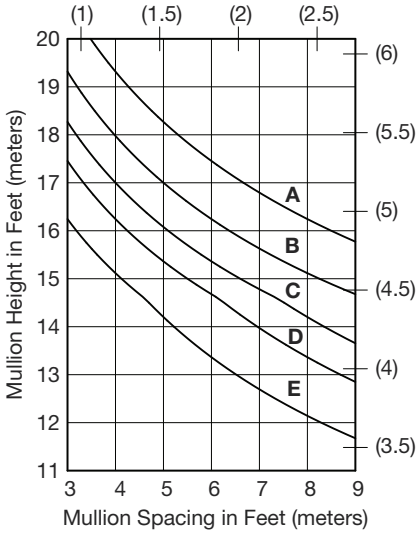

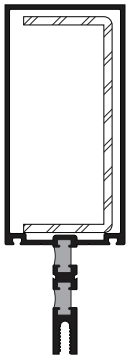

PW305 With **SS905**
I_{xx} = 8.422
S_{xx} = 2.308

SS905 Steel
I_{xx} = 3.577
S_{xx} = 1.590

CURVE **A** = 15 PSF (718 Pa)
CURVE **B** = 20 PSF (957 Pa)
CURVE **C** = 25 PSF (1197 Pa)
CURVE **D** = 30 PSF (1436 Pa)
CURVE **E** = 40 PSF(1915 Pa)

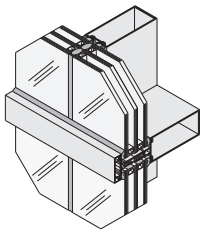

SERIES HP3253SG
Structural Silicone High Performance Vertical Glazed Curtain Wall

STRUCTURAL SILICONE GLAZE VERTICAL MULLIONS FOR 2" (51) TRIPLE GLAZING

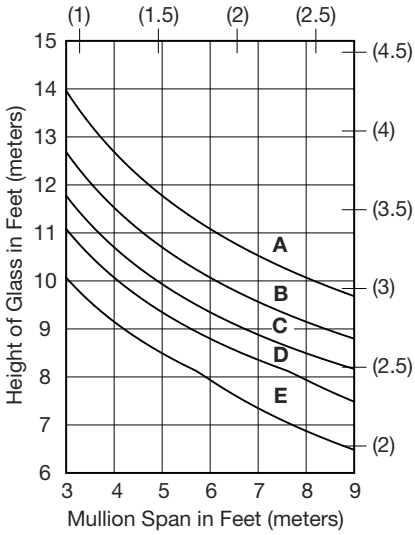

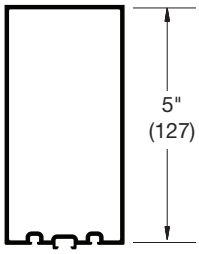

CW935
I_{xx} = 4.020
S_{xx} = 1.512

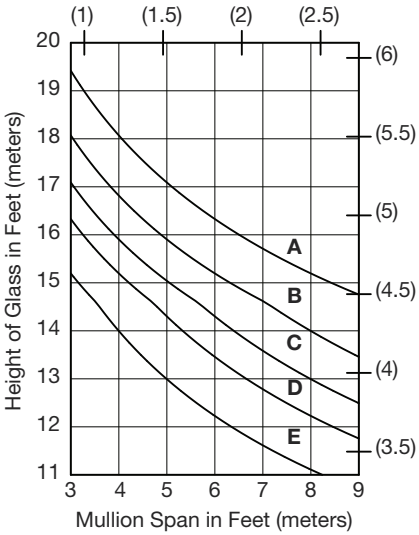

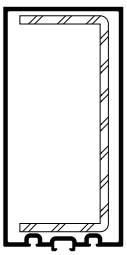

CW935 With **SS905**
I_{xx} = 4.020
S_{xx} = 1.512

SS905 Steel
I_{xx} = 3.577
S_{xx} = 1.590

CURTAIN WALLS

Deadload Charts

High Performance Thermally Broken

- Series HP3253
- Series HP3253SG

Patent No. 7,975,442

OPEN BACK HORIZONTAL MULLIONS FOR 2" (51) TRIPLE GLAZING

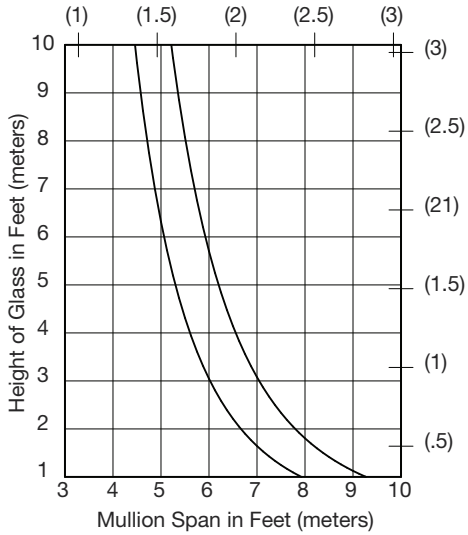

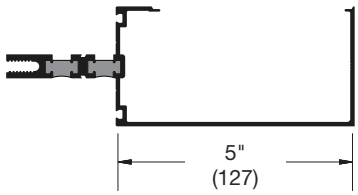

PT325
I_{yy} =0.952
S_{yy} = 0.630

CURVES **A** = 1/4 point loading
CURVES **B** = 1/8 point loading

Calculated using glass weight of:
9.75 lbs/sf

TUBULAR HORIZONTAL MULLIONS FOR 2" (51) TRIPLE GLAZING

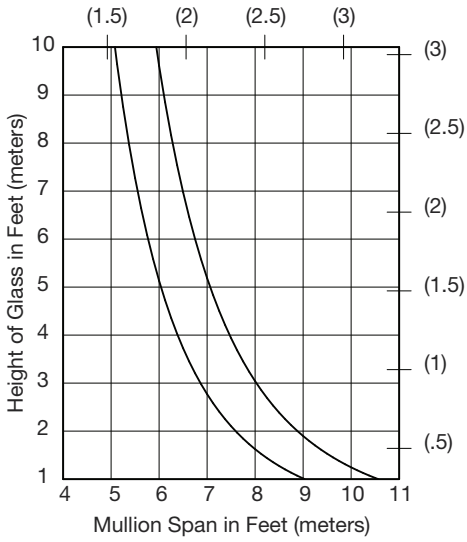

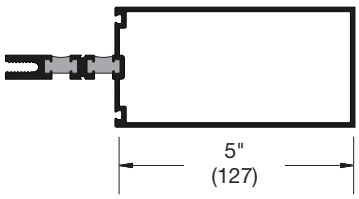

PT305
I_{yy} = 1.605
S_{yy} = 1.274

CURTAIN WALLS

Accessories

FOR 5" (127) MULLION DEPTH

High Performance Thermally Broken

- **Series HP3253**
- **Series HP3253SG**

Patent No. 7,975,442

PART NO.	DETAIL	DESCRIPTION	PKG. QTY.
AP965	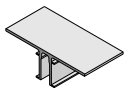	Intermediate Vertical Anchor at Head and Sill for PT605	12
AP995	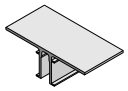	Intermediate Vertical Anchor at Head and Sill for CW935	12
AP975	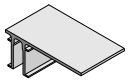	Wall Jamb Anchor at Head and Sill for PT605	6
AP960	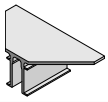	Outside 90 Degree Corner Anchor at Head and Sill for CW960	12
SL945	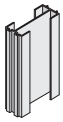	Mullion Splice Sleeve for PT605	12
SL935	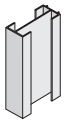	Mullion Splice Sleeve for CW935	12
SL960	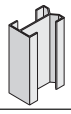	Outside 90 Degree Corner Mullion Splice Sleeve for CW960	5
NP430		Exterior Gasket	250' Roll
NP420		Interior Gasket	250' Roll
SP450		Spacer Gasket for Butt Glaze	250' Roll
RG720	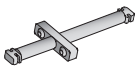	Temporary Glass Retainer for 2" (51) Butt Glaze. Patent No. D295,952	50
AW901	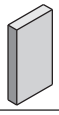	Edge Block 1-7/16" x 2-1/2" (36.5 x 63.5)	100
AW900	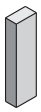	Edge Block 11/16" x 2-1/2" (17.5 x 63.5)	50

PART NO.	DETAIL	DESCRIPTION	PKG. QTY.
AP955		Intermediate Shear Block for 5" (127) Back Members (Includes Screws)	20
AP926	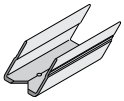	Shear Block Inside and Outside Corners (Includes Screws)	20
HD885	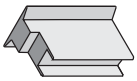	End Dam for Captured Mullions For 2" (51) Glass	50
ED503	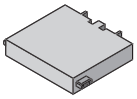	End Dam for Butt Glaze Mullions for 2" (51) Glass	50
CP885	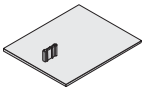	Closure Plate for Captured Mullions	50
CP948	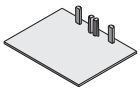	Closure Plate for Vertical Mullions	50
CP953	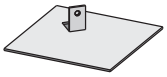	Closure Plate for Outside Corner	10
CW368	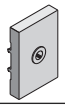	Temporary Glass Retainer for Captured Mullions	50
WD961		Water Dam for Outside Corner	10
MS222		Screw for Pressure Bar 1/4"-20 x 1"(25) HWHCS with SRG5	200
SB933	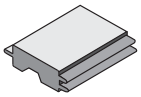	Setting Block for 2" (51) Glass; 4" (101.6) Long	100
SB910	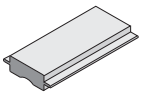	Transition Glazing Setting Block for 1" (25) Glass; 4" (101.6) Long	100
SB925	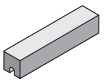	Transition Glazing Setting Block for 1/4" (6) Glass; 4" (101.6) Long	100

CURTAIN WALLS

Table of Contents

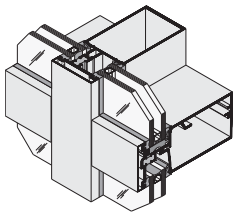

SERIES 4250T
Thermally Broken Interior
Glazed Curtain Wall

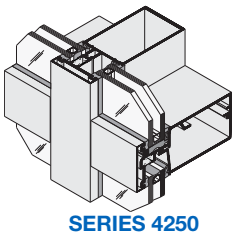

SERIES 4250
Non Thermal Interior
Glazed Curtain Wall

Thermally Broken
- **Series 4250T**

Non Thermal
- **Series 4250**

SECTION J6 **PAGE**

SPECIFICATIONS .....02-J6 and 03-J6
TECHNICAL DATA 04-J6
SPECIAL FEATURES 05-J6
TYPICAL DETAILS .....06-J6 thru 13-J6
WINDLOAD CHARTS .....14-J6 and 15-J6
DEADLOAD CHARTS 16-J6
ACCESSORIES .....17-J6 and 18-J6

Project: TAP Holdings; Deerfield, IL

Due to the diversity in state/provincial, local, and federal laws and codes that govern the design and application of architectural products, it is the responsibility of the individual architect, owner, and installer to ensure that products selected for use on projects comply with all applicable building codes and laws. U.S. Aluminum exercises no control over the use or application of its products, glazing materials, and operating hardware, and assumes no responsibility thereof.

The rapidly changing technology within the architectural aluminum products industry demands that U.S. Aluminum reserve the right to revise, discontinue or change any product line, specification or electronic media without prior written notice.

NOTE: Dimensions in parentheses ( ) are millimeters unless otherwise noted.
Other metric units shown in this publication are:

m - meter	Kg - kilogram
Pa - pascal	KPa - kilopascal
MPa - megapascal	

CURTAIN WALLS

Specifications

SECTION 08 44 13 ALUMINUM CURTAIN WALL SYSTEMS

Thermally Broken
• Series 4250T

SERIES	FACE WIDTH	DEPTH	GLAZING INFILL	GLAZING METHOD
4250T	2-1/2" (63.5)	6" (152.4)	1" (25) and/or 1/4" (6)	Interior

I. GENERAL DESCRIPTION
Work Included: Furnish all necessary materials, labor, and equipment for the complete installation of aluminum framing as shown on the drawings and specified herein. *(Specifier Note: It is suggested that related items such as aluminum entrance doors, glass, and sealants be included whenever possible.)*
Work Not Included: Structural support of the framing system, interior closures, trim *(Specifier list other exclusions)*.
Related Work Specified Elsewhere: *(Specifier list)*.

QUALITY ASSURANCE
Drawings and specifications are based on the Series 4250T Thermal Curtain Wall System as manufactured by U.S. Aluminum. Whenever substitute products are to be considered, supporting technical literature, samples, drawings and performance data must be submitted 10 days prior to bid in order to make a valid comparison of the products involved.

PERFORMANCE REQUIREMENTS
Air Infiltration: shall be tested in accordance with ASTM E 283. Infiltration shall not exceed .06 CFM per square foot (.0003m^3/sm^2) of fixed area when tested at 6.24 psf (300 Pa).
Water Infiltration: shall be tested in accordance with ASTM E 331.
No water penetration at test pressure of 12 psf (574 Pa).
Structural Performance: shall be tested in accordance with ASTM E 330 and based on:
- Maximum deflection of L/175 of the span
- Allowable stress with a safety factor of 1.65

The system shall perform to this criteria under a windload of *(Specify)* psf.
System shall exceed maximum seismic lateral displacement requirements specified in section 1628.8.2 of the Uniform Building Code, 1994 edition.
Upon successful completion of the Phase I seismic testing, the curtain wall shall once again be subjected to and must successfully pass the air and water infiltration tests specified above before proceeding to Phase II testing.
Structural Integrity - Manufacturer shall provide a Two Year Warranty on thermal framing against failure resulting from the following:
- Longitudinal or transverse thermal barrier shrinkage.
- Thermal barrier cracking.
- Structural failure of the thermal barrier material.
- Loss of adhesion or loss of prescribed edge pressure on the glazed material resulting in excessive air and water infiltration.

Thermal Performance: Series 4250T shall be tested in accordance with AAMA 1503, and NFRC-100.
Testing Procedures:
ASTM 283, E 331, and E 330 - Laboratory performance testing. AAMA 503-08 - Newly installed curtain wall. AAMA 511-08 - Installed curtain wall after six months.

II. PRODUCTS MATERIALS
Extrusions shall be 6063-T5 alloy and temper (ASTM B221 alloy T5 temper), thermally broken by a two part chemically cured high density polyurethane. To ensure that composite strength remains unaltered during thermal cycling, a mechanical bond between the aluminum and the thermal filling shall be created by mechanically abrading the extrusion thermal cavity prior to filling with the polyurethane polymer. Fasteners, where exposed, shall be aluminum, stainless steel or zinc plated steel in accordance with ASTM A 164. Perimeter anchors shall be aluminum or steel, providing the steel is properly isolated from the aluminum. Glazing gaskets shall be E.P.D.M. elastomeric extrusions.

FINISH
All exposed framing surfaces shall be free of scratches and other serious blemishes. Aluminum extrusions shall be given a caustic etch followed by an anodic oxide treatment to obtain…
(Specify one of the following):
_____#11 Clear anodic coating
_____#22 Dark Bronze anodic coating
_____#33 Black anodic coating
A Fluoropolymer paint coating conforming with the requirements of AAMA 2605. Color shall be *(Specify a U. S. Aluminum standard color)*.

FABRICATION
The curtain wall system shall provide for both vertical and horizontal members to project a maximum of 3/4" (19) to the exterior. Provisions shall be made at sealed horizontals to weep moisture accumulations to the exterior. Spandrel horizontals shall feature a gutter to collect moisture and weep it to the exterior. Vertical and horizontal components shall be designed for complete inside glazing of spandrel and vision glass. Provisions shall be made for re-glazing of spandrel from exterior without removal of vision lights. Vertical splices shall be designed to provide adequate space for thermal expansion. Splice sleeves will ensure the seal and weatherability of the splice joints. System shall provide for expansion and contraction of component materials as will be required by an ambient temperature range of 120 degrees F (49°C) without causing harmful buckling or cracking, opening of joints, undue stress on fasteners or other effects detrimental to weathering performance. The system shall accommodate 1" (25) infill with provision for 1/4" (6) infill at spandrel areas.

III. EXECUTION INSTALLATION
All glass framing shall be set in correct locations as shown in the details and shall be level, square, plumb, and in alignment with other work in accordance with the manufacturer's installation instructions and approved shop drawings. All joints between framing and the building structure shall be sealed in order to secure a watertight installation.

PROTECTION AND CLEANING
After installation the General Contractor shall adequately protect exposed portions of aluminum surfaces from damage by grinding and polishing compounds, plaster, lime, acid, cement or other contaminants. The General Contractor shall be responsible for final cleaning.

CURTAIN WALLS

Specifications

Non Thermal
• Series 4250

SECTION 08 44 13 ALUMINUM CURTAIN WALL SYSTEMS

SERIES	FACE WIDTH	DEPTH	GLAZING INFILL	GLAZING METHOD
4250	2-1/2" (63.5)	6" (152.4)	1" (25) and/or 1/4" (6)	Interior

I. GENERAL DESCRIPTION

Work Included: Furnish all necessary materials, labor, and equipment for the complete installation of aluminum framing as shown on the drawings and specified herein. *(Specifier Note: It is suggested that related items such as aluminum entrance doors, glass, and sealants be included whenever possible.)*
Work Not Included: Structural support of the framing system, interior closures, trim. *(Specifier list other exclusions)*.
Related Work Specified Elsewhere: *(Specifier list)*.

QUALITY ASSURANCE

Drawings and specifications are based on the Series 4250 Curtain Wall System as manufactured by U.S. Aluminum. Whenever substitute products are to be considered, supporting technical literature, samples, drawings, and performance data must be submitted 10 days prior to bid in order to make a valid comparison of the products involved. Test reports certified by an independent test laboratory must be made available upon request.

PERFORMANCE REQUIREMENTS

Air Infiltration: shall be tested in accordance with ASTM E 283. Infiltration shall not exceed .06 CFM per square foot (.0003m^3/sm^2) of fixed area when tested at 6.24 psf (300 Pa).
Water Infiltration: shall be tested in accordance with ASTM E 331.
No water penetration at test pressure of 12 psf (574 Pa).
Structural Performance: shall be tested in accordance with ASTM E 330 and based on:

- Maximum deflection of L/175 of the span
- Allowable stress with a safety factor of 1.65

The system shall perform to this criteria under a windload of *(Specify)* psf.
System shall exceed maximum seismic lateral displacement requirements specified in section 1628.8.2 of the Uniform Building Code, 1994 edition. Upon successful completion of the Phase I seismic testing, the curtain wall shall once again be subjected to and must successfully pass the air and water infiltration tests specified above before proceeding to Phase II testing.
Testing Procedures:
ASTM 283, E 331, and E 330 - Laboratory performance testing. AAMA 503-08 - Newly installed curtain wall. AAMA 511-08 - Installed curtain walls after six months.

II. PRODUCTS MATERIALS

Extrusions shall be 6063-T5 alloy and temper (ASTM B221 alloy T5 temper). Fasteners, where exposed, shall be aluminum, stainless steel or zinc plated steel in accordance with ASTM A 164. Perimeter anchors shall be aluminum or steel, providing the steel is properly isolated from the aluminum. Glazing gaskets shall be E.P.D.M. elastomeric extrusions.

FINISH

All exposed framing surfaces shall be free of scratches and other serious blemishes. Aluminum extrusions shall be given a caustic etch followed by an anodic oxide treatment to obtain… *(Specify one of the following)*:
_____#11 Clear anodic coating
_____#22 Dark Bronze anodic coating
_____#33 Black anodic coating
A Fluoropolymer paint coating conforming with the requirements of AAMA 2605. Color shall be *(Specify a U.S. Aluminum standard color)*.

FABRICATION

The curtain wall system shall provide for both vertical and horizontal members to project a maximum of 3/4" (19) to the exterior. Provisions shall be made at sealed horizontals to weep moisture accumulations to the exterior.

Spandrel horizontals shall feature a gutter to collect moisture and weep it to the exterior. Vertical and horizontal components shall be designed for complete inside glazing of spandrel and vision glass. Provisions shall be made for re-glazing of spandrel from exterior without removal of vision lights. Vertical splices shall be designed to provide adequate space for thermal expansion. Splice sleeves will ensure the seal and weatherability of the splice joints. System shall provide for expansion and contraction of component materials as will be required by an ambient temperature range of 120 degrees F (49° C) without causing harmful buckling or cracking, opening of joints, undue stress on fasteners or other effects detrimental to weathering performance. The system shall accommodate 1" (25) infill with provision for 1/4" (6) infill at spandrel areas.

III. EXECUTION INSTALLATION

All glass framing shall be set in correct locations as shown in the details and shall be level, square, plumb, and in alignment with other work in accordance with the manufacturer's installation instructions and approved shop drawings. All joints between framing and the building structure shall be sealed in order to secure a watertight installation.

PROTECTION AND CLEANING

After installation the General Contractor shall adequately protect exposed portions of aluminum surfaces from damage by grinding and polishing compounds, plaster, lime, acid, cement or other contaminants. The General Contractor shall be responsible for final cleaning.

CURTAIN WALLS

Technical Data

Thermally Broken
• Series 4250T

Non Thermal
• Series 4250

Series 4250T Curtain Wall is a stick-erected, interior-glazed curtain wall utilizing a pocket set design and E.P.D.M. compression glazing gaskets. This system features the Poly-Aluminizer™ thermal break technology. It was specifically engineered to satisfy the increasing demands for energy conservation. Dual colors can be achieved by specifying different finishes for the exterior face covers and the interior mullions. Two piece horizontals and shear blocks allow for a concealed horizontal to vertical joinery without exposed screws. These joint intersections also have concealed injection molded end dams for controlling any infiltrated water.

NOTE: Series 4250 offers the same features, except it is not thermally broken.

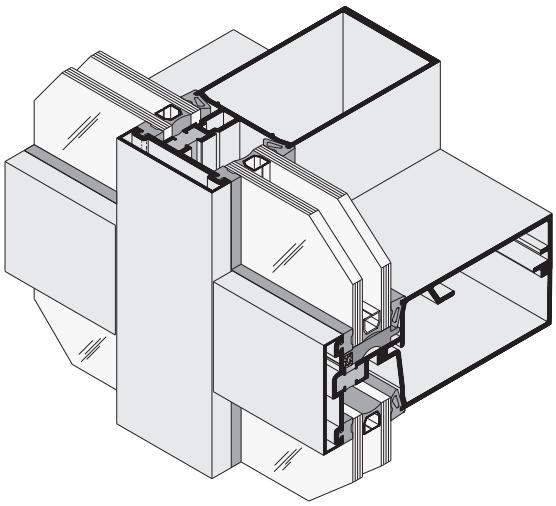

SERIES 4250T
Thermally Broken Interior Glazed Curtain Wall

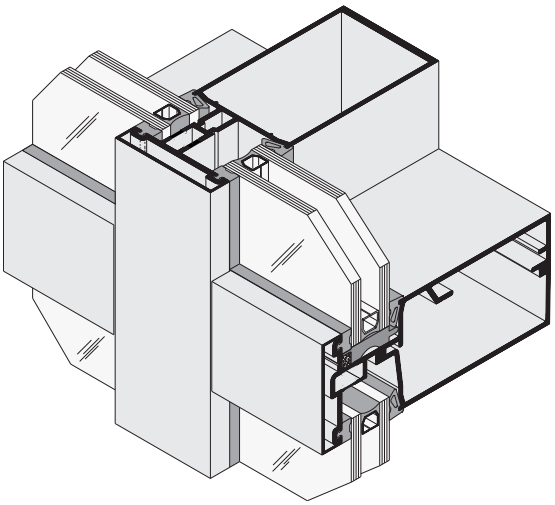

SERIES 4250
Non Thermal Interior Glazed Curtain Wall

SERIES	WIDTH	DEPTH	GLAZING INFILL	APPLICATIONS
4250T 4250	2-1/2" (63.5)	6" (152.4)	1" (25) and/or 1/4" (6)	Low-Rise to Mid-Rise Buildings Where Interior Glazing is Desired.

GLASS SIZES*	
Glass Width and Height	= Daylight Opening + 15/16" (23.8)

* These formulae do not take into account glass tolerances. Consult glass manufacturer before ordering glass.

CURTAIN WALLS

Special Features

Thermally Broken
- **Series 4250T**

Non Thermal
- **Series 4250**

Install Injection Molded Closure Plates at top and bottom of verticals to ensure a continuous perimeter seal.

Slide top and bottom "T" Anchors into vertical mullions. Install vertical mullions plumb and level. Secure top and bottom "T" Anchors to structure. See page 17-J6 for additional information.

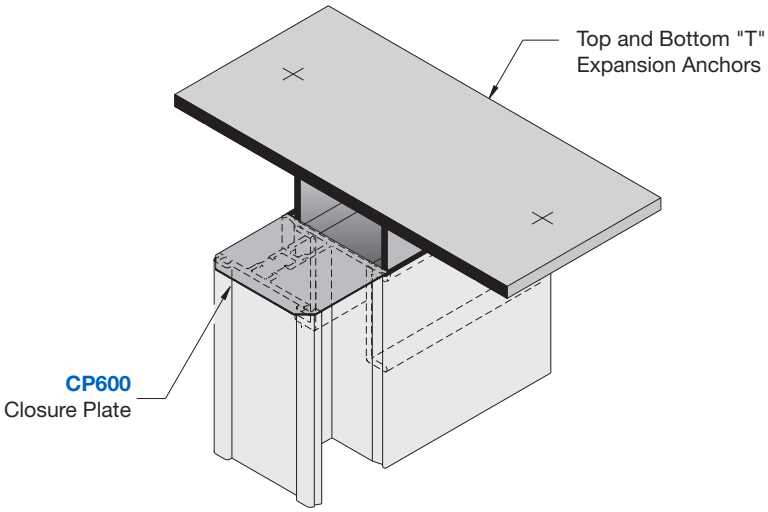

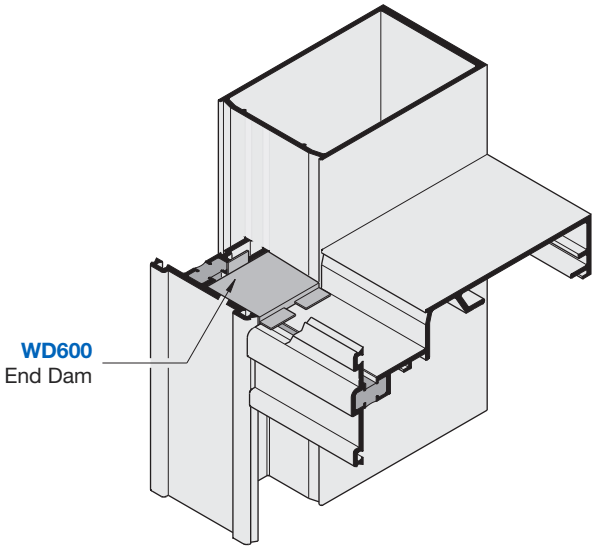

Injected Molded End Dams are for controlling any infiltrated water. Apply sealant to the four contact sides of end dams and slide between vertical and horizontal joint as shown. See page 17-J6 for additional information.

Sill Members are designed with Snap-In Covers to conceal fasteners.

Head and intermediate horizontal mullions are also designed to conceal the fasteners which attach to the Shear Block. See page 17-J6 for additional information.

NOTE: To accelerate installation times with pinpoint accuracy of Horizontal Shear Blocks to Curtain Wall Mullions see pages 56-P1 and 57-P1.

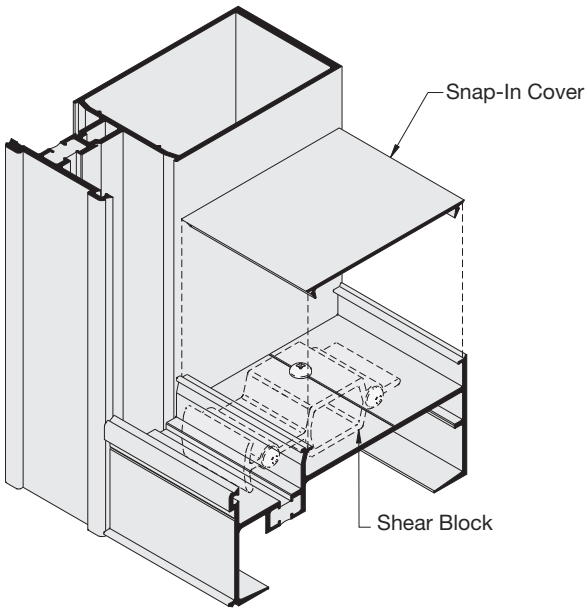

CURTAIN WALLS

Typical Details

VERTICAL MULLIONS FOR 1" (25) GLAZING

NOTE: Part numbers shown are available in 24' (7.3 m) stock lengths. Visit **usalum.com** for more information.

P	T	6	0	0

Two digit Part Number prefix ending in "T" represents THERMALLY BROKEN parts. Thermal parts are in **BOLD** print. **4250T** details are typically shown.

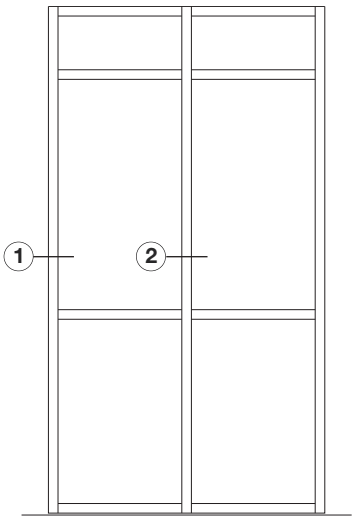

TYPICAL ELEVATION

Thermally Broken
- **Series 4250T**

Non Thermal
- **Series 4250**

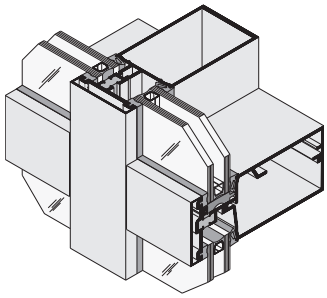

SERIES 4250T
Thermally Broken
Interior Glazed
Curtain Wall

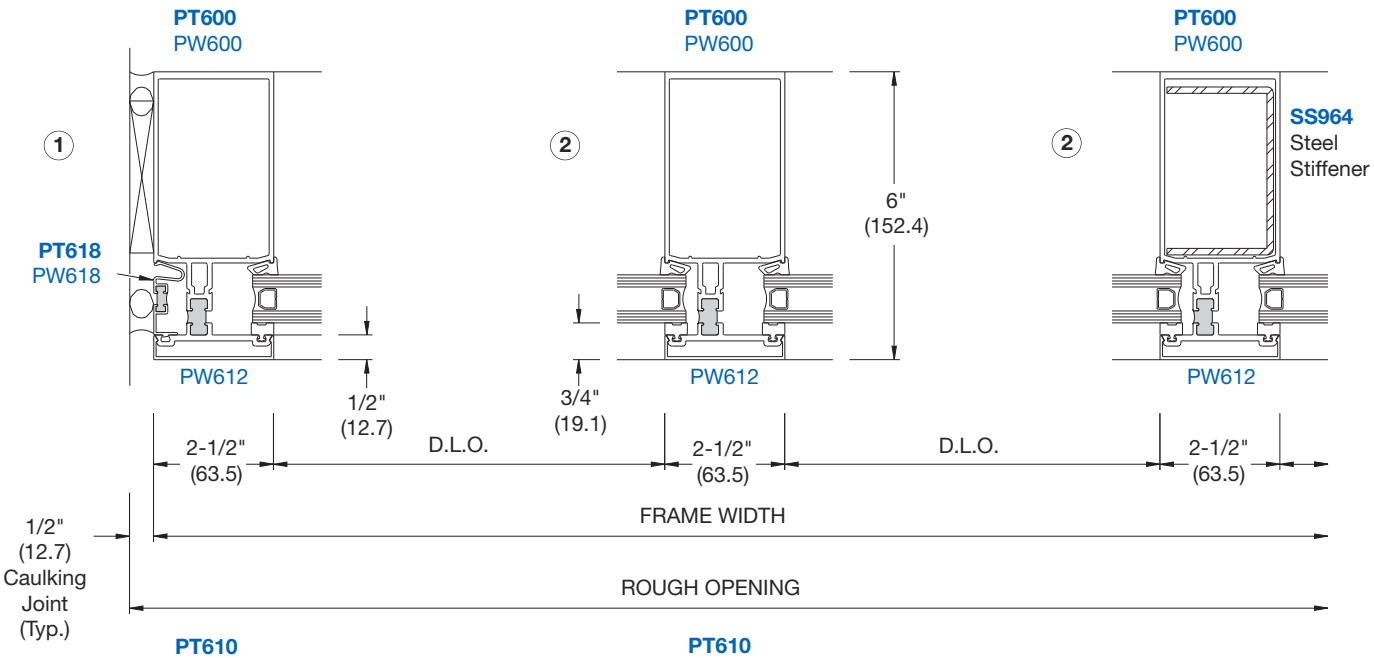

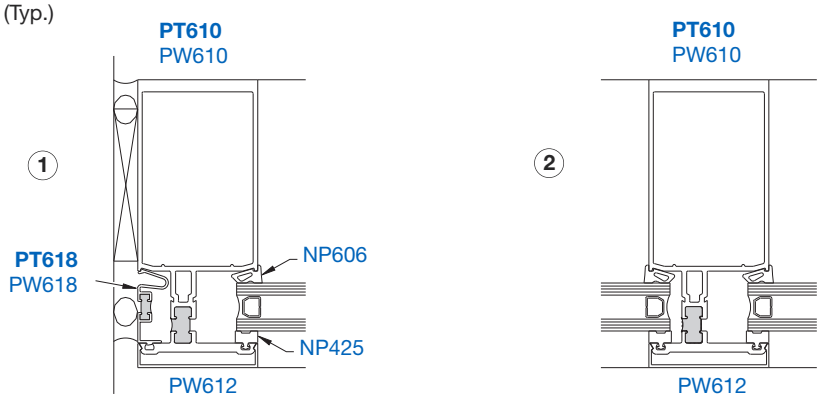

HEAVY WALL VERTICALS

NOT TO SCALE

CURTAIN WALLS

Typical Details

Thermally Broken
• **Series 4250T**

Non Thermal
• **Series 4250**

HORIZONTAL MULLIONS FOR 1" (25) GLAZING

NOTE: Part numbers shown are available in 24' (7.3 m) stock lengths. Visit **usalum.com** for more information.

NOTE: The PW613 Beveled Face Cap (Shown) is Standard for Horizontal Members. The CW901 Square Face Cap is Optional.

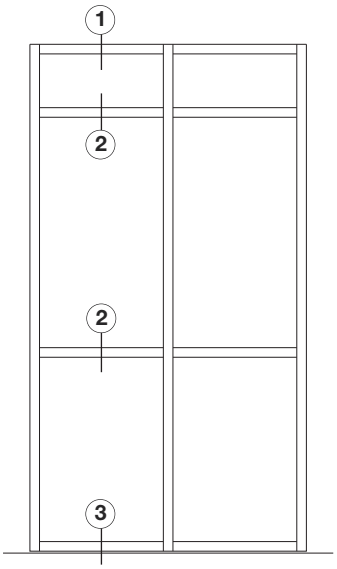

TYPICAL ELEVATION

P	T	6	0	0

Two digit Part Number prefix ending in "T" represents THERMALLY BROKEN parts. Thermal parts are in **BOLD** print. **4250T** details are typically shown.

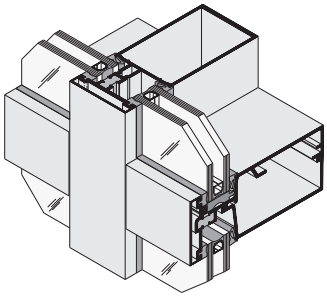

SERIES 4250T
Thermally Broken
Interior Glazed
Curtain Wall

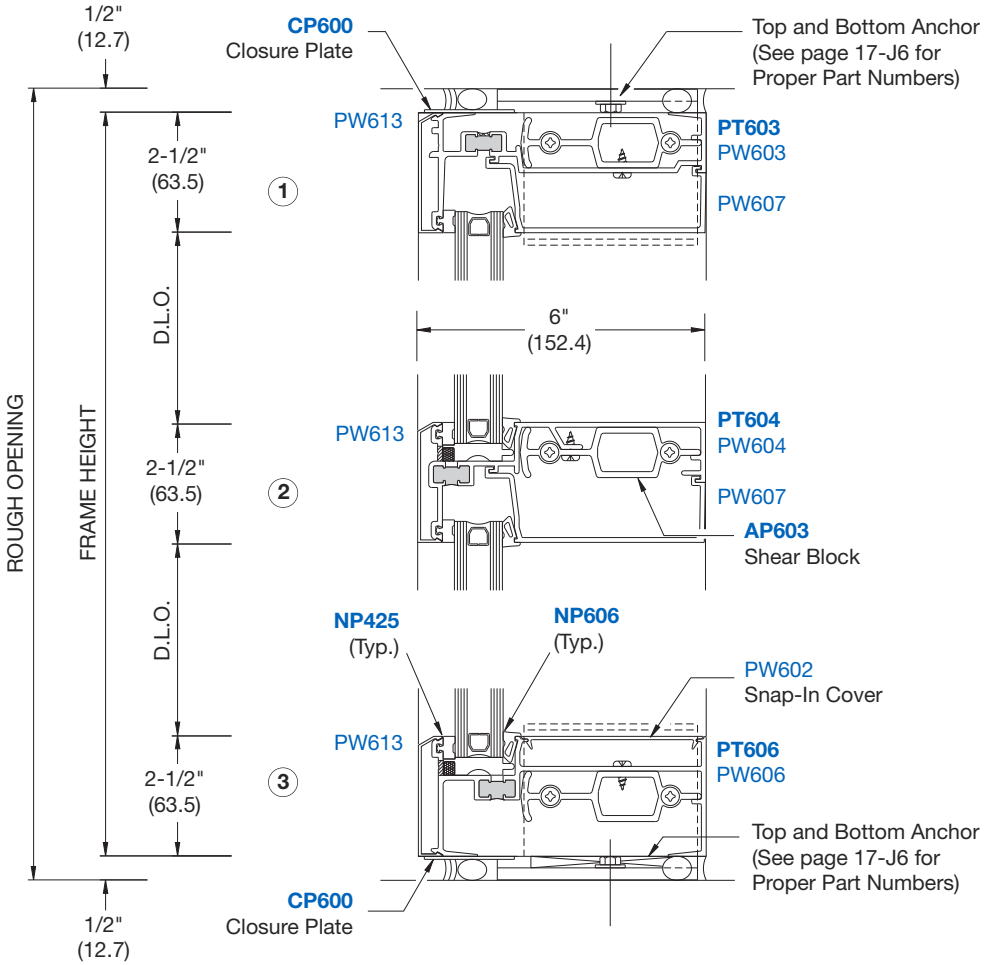

NOT TO SCALE

CURTAIN WALLS

Typical Details

DOOR FRAMING

NOTE: Door Frames are available in stock to accommodate 36" x 84" (914 x 2134) and 72" x 84" (1829 x 2134) door openings. Visit **usalum.com** for more information.

NOTE: The PW613 Beveled Face Cap (shown) is standard for Horizontal Members. The CW901 Square Face Cap is Optional.

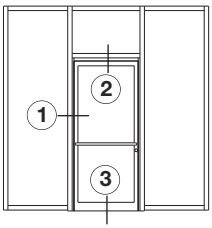

CENTER HUNG DOOR

Thermally Broken
• Series 4250T

Non Thermal
• Series 4250

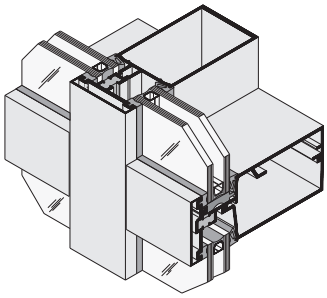

SERIES 4250T
Thermally Broken
Interior Glazed
Curtain Wall

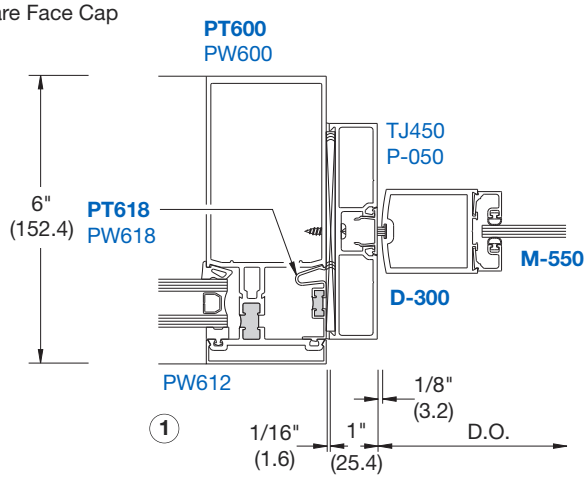

P	T	6	0	0

Two digit Part Number prefix ending in "T" represents THERMALLY BROKEN parts. Thermal parts are in **BOLD** print. **4250T** details are typically shown.

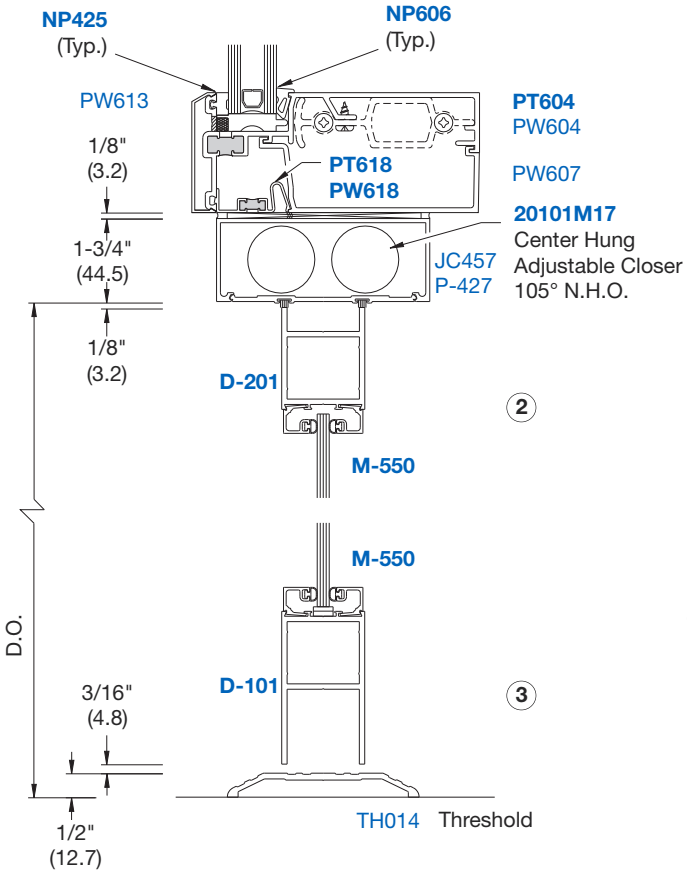

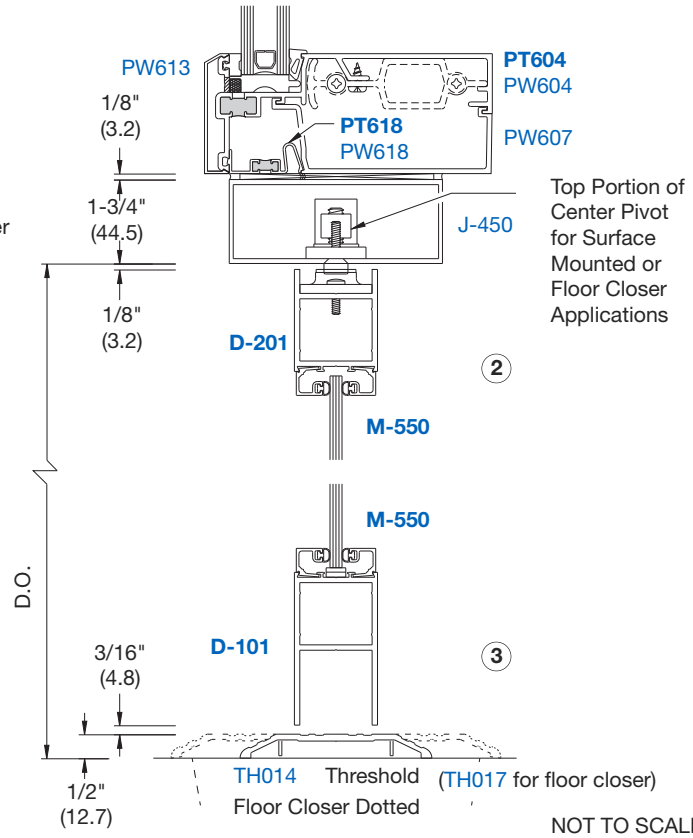

NOT TO SCALE

CURTAIN WALLS

Typical Details

Thermally Broken
• Series 4250T

Non Thermal
• Series 4250

DOOR FRAMING

NOTE: Door Frames are available in stock to accommodate 36" x 84" (914 x 2134) and 72" x 84" (1829 x 2134) door openings. Visit **usalum.com** for more information.

NOTE: The PW613 Beveled Face Cap (shown) is Standard for Horizontal Members. The CW901 Square Face Cap is Optional.

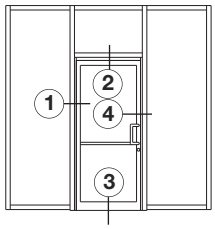

OFFSET HUNG DOOR

P	T	6	0	0

Two digit Part Number prefix ending in "T" represents THERMALLY BROKEN parts. Thermal parts are in **BOLD** print. **4250T** details are typically shown.

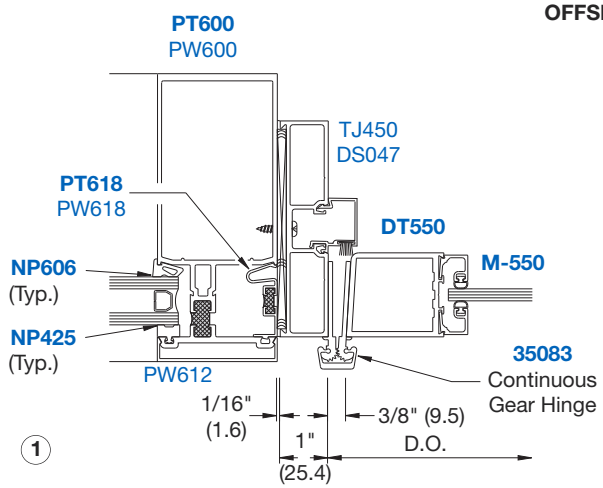

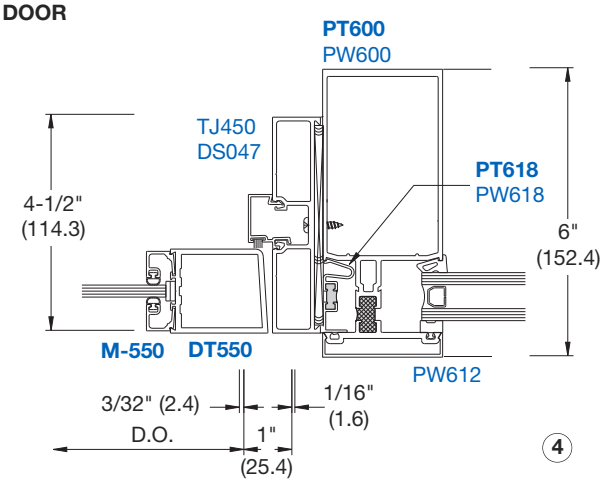

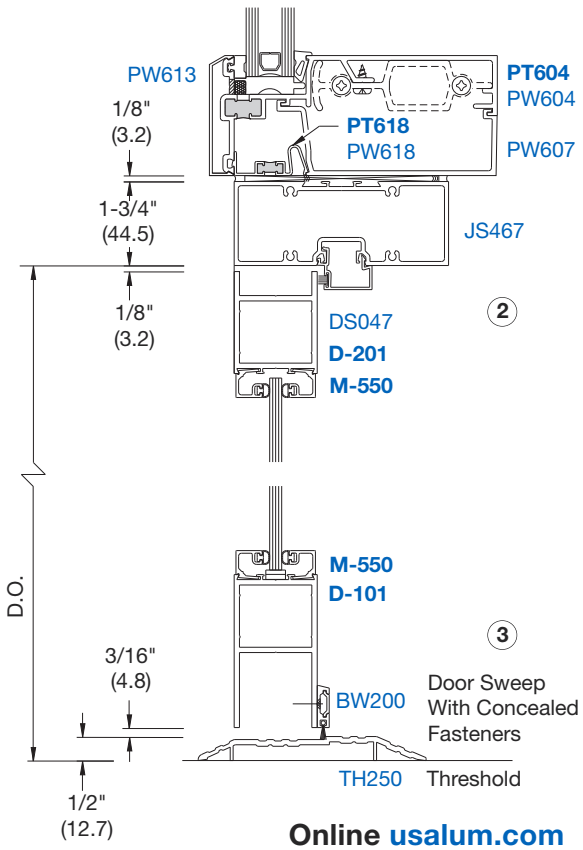

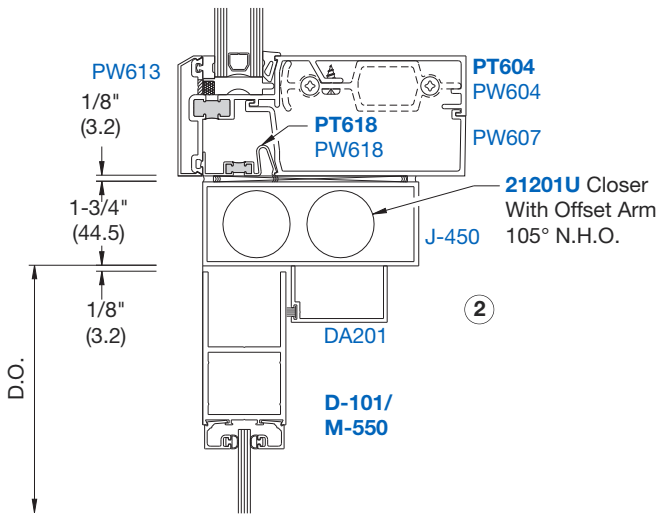

NOT TO SCALE

CURTAIN WALLS

Typical Details

90 DEGREE CORNER CONDITIONS

Thermally Broken
- **Series 4250T**

Non Thermal
- **Series 4250**

P	T	6	0	0

Two digit Part Number prefix ending in "T" represents THERMALLY BROKEN parts. Thermal parts are in **BOLD** print. **4250T** details are typically shown.

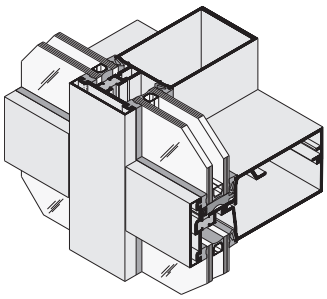

SERIES 4250T
Thermally Broken
Interior Glazed
Curtain Wall

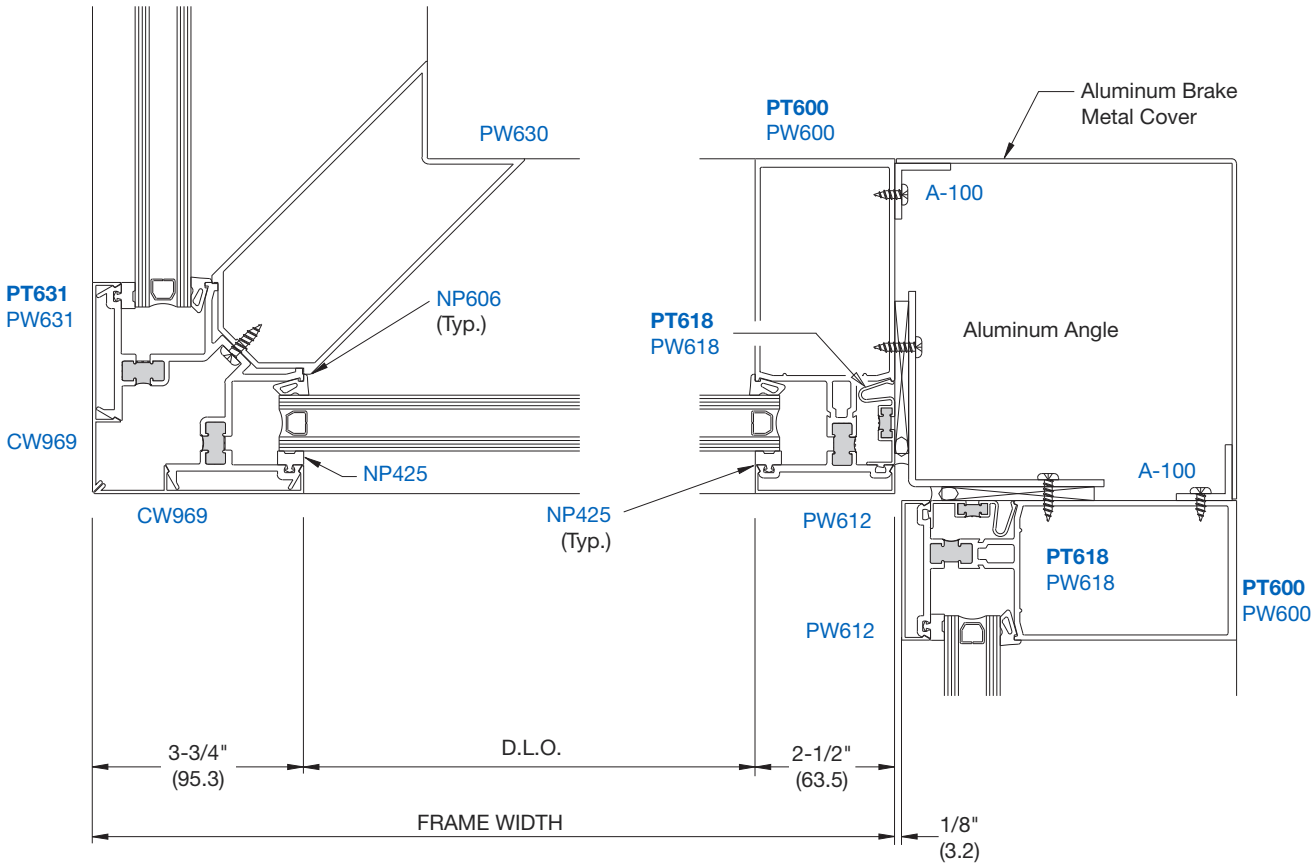

NOT TO SCALE

CURTAIN WALLS

Typical Details

Thermally Broken
• **Series 4250T**

Non Thermal
• **Series 4250**

1" (25) TO 1/4" (6) TRANSITION GLAZING

NOTE: Part numbers shown are available in 24' (7.3 m) stock lengths. Visit **usalum.com** for more information.

NOTE: The PW613 Beveled Face Cap (shown) is Standard for Horizontal Members. The CW901 Square Face Cap is Optional.

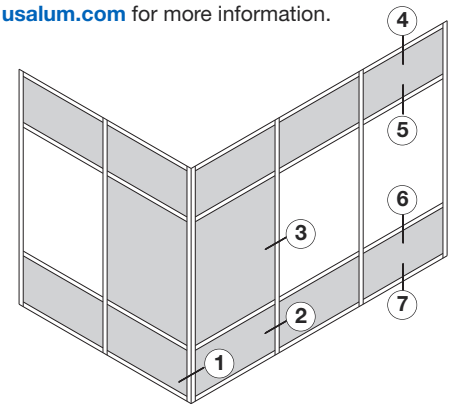

TYPICAL ELEVATION

P	T	6	0	0

Two digit Part Number prefix ending in "T" represents THERMALLY BROKEN parts. Thermal parts are in **BOLD** print. **4250T** details are typically shown.

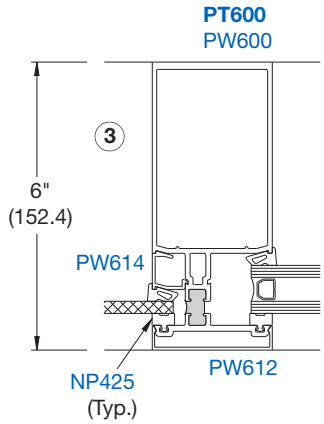

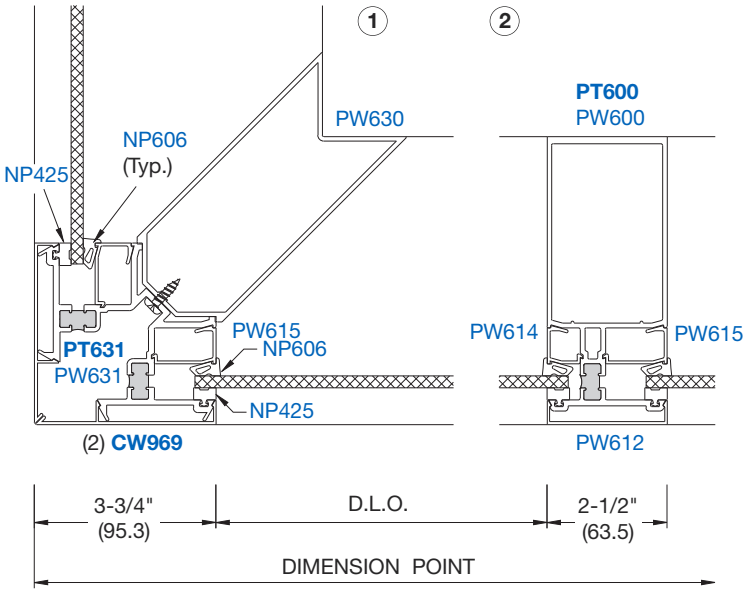

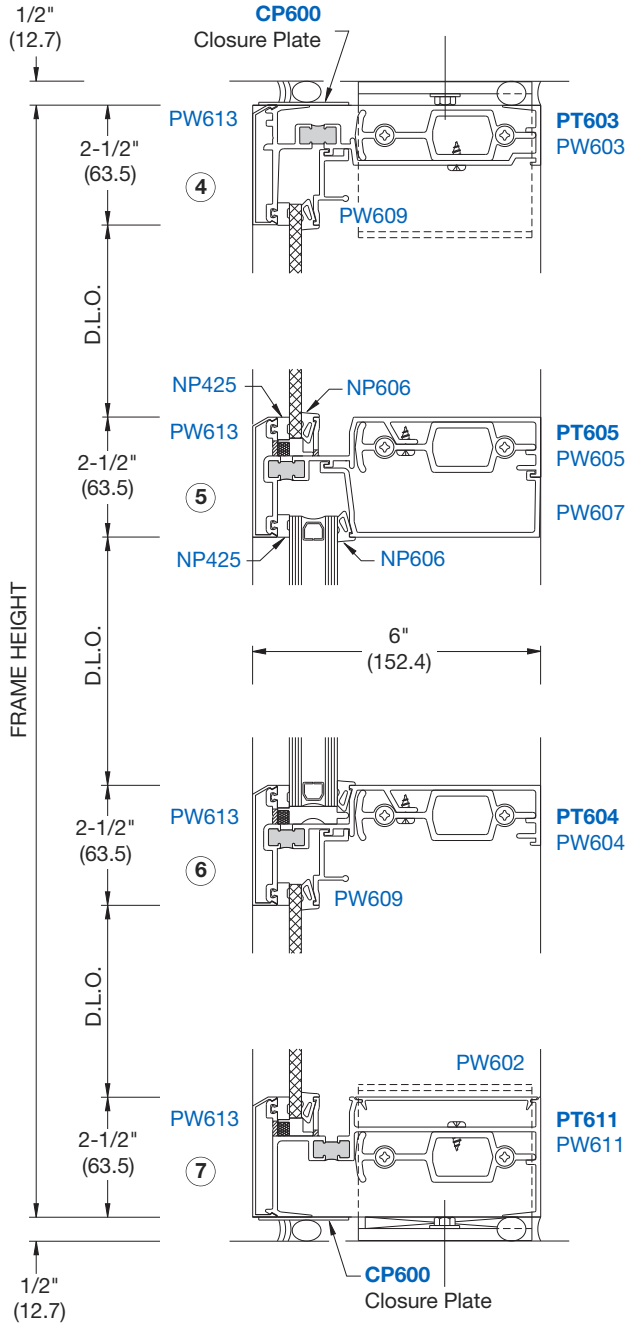

NOT TO SCALE

CURTAIN WALLS

Typical Details

Thermally Broken
- **Series 4250T**

Non Thermal
- **Series 4250**

MID-SPAN ANCHORS AND MULLION SPLICE

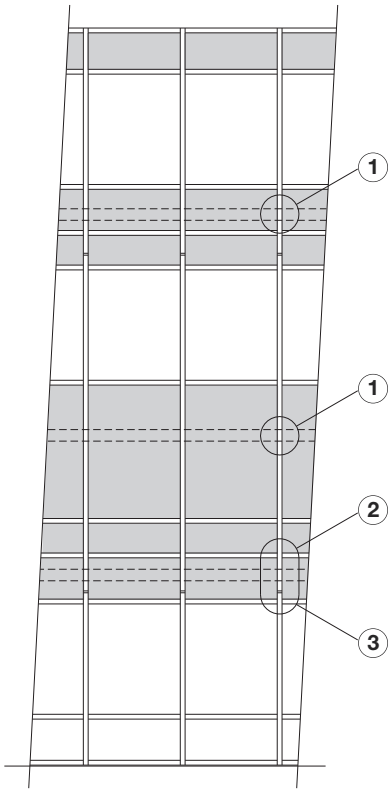

TYPICAL ELEVATION

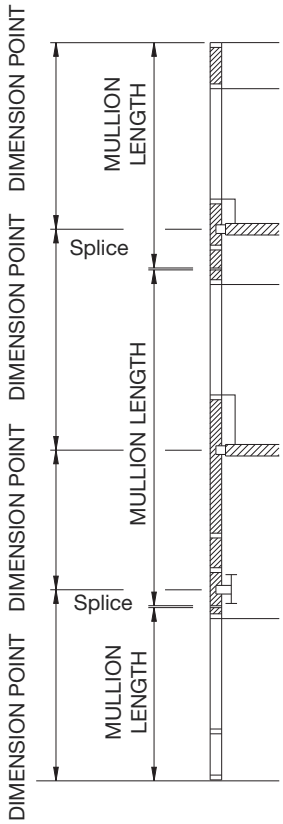

SECTION DETAIL

P	T	6	0	0

Two digit Part Number prefix ending in "T" represents THERMALLY BROKEN parts. Thermal parts are in **BOLD** print. **4250T** details are typically shown.

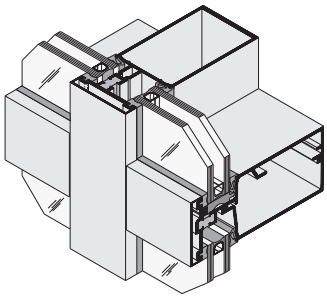

SERIES 4250T
Thermally Broken
Interior Glazed
Curtain Wall

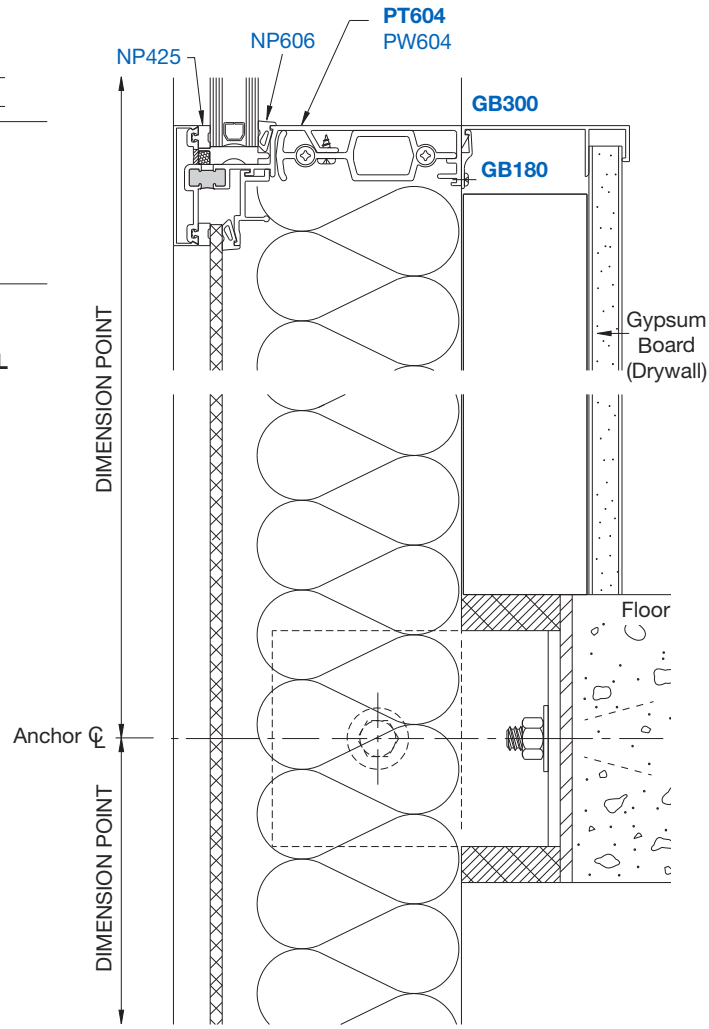

1

FIXED ANCHOR
(DEADLOAD ANCHOR)

NOTE: Anchor Type and Size varies per job requirements.

NOT TO SCALE

CURTAIN WALLS

Typical Details

Thermally Broken
• **Series 4250T**

Non Thermal
• **Series 4250**

MID-SPAN ANCHORS AND MULLION SPLICE

P	T	6	0	0

Two digit Part Number prefix ending in "T" represents THERMALLY BROKEN parts. Thermal parts are in **BOLD** print. **4250T** details are typically shown.

SERIES 4250T
Thermally Broken
Interior Glazed
Curtain Wall

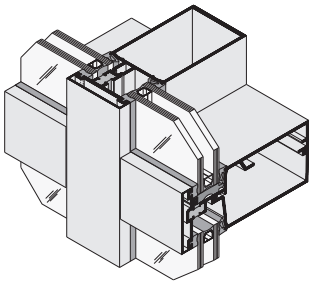

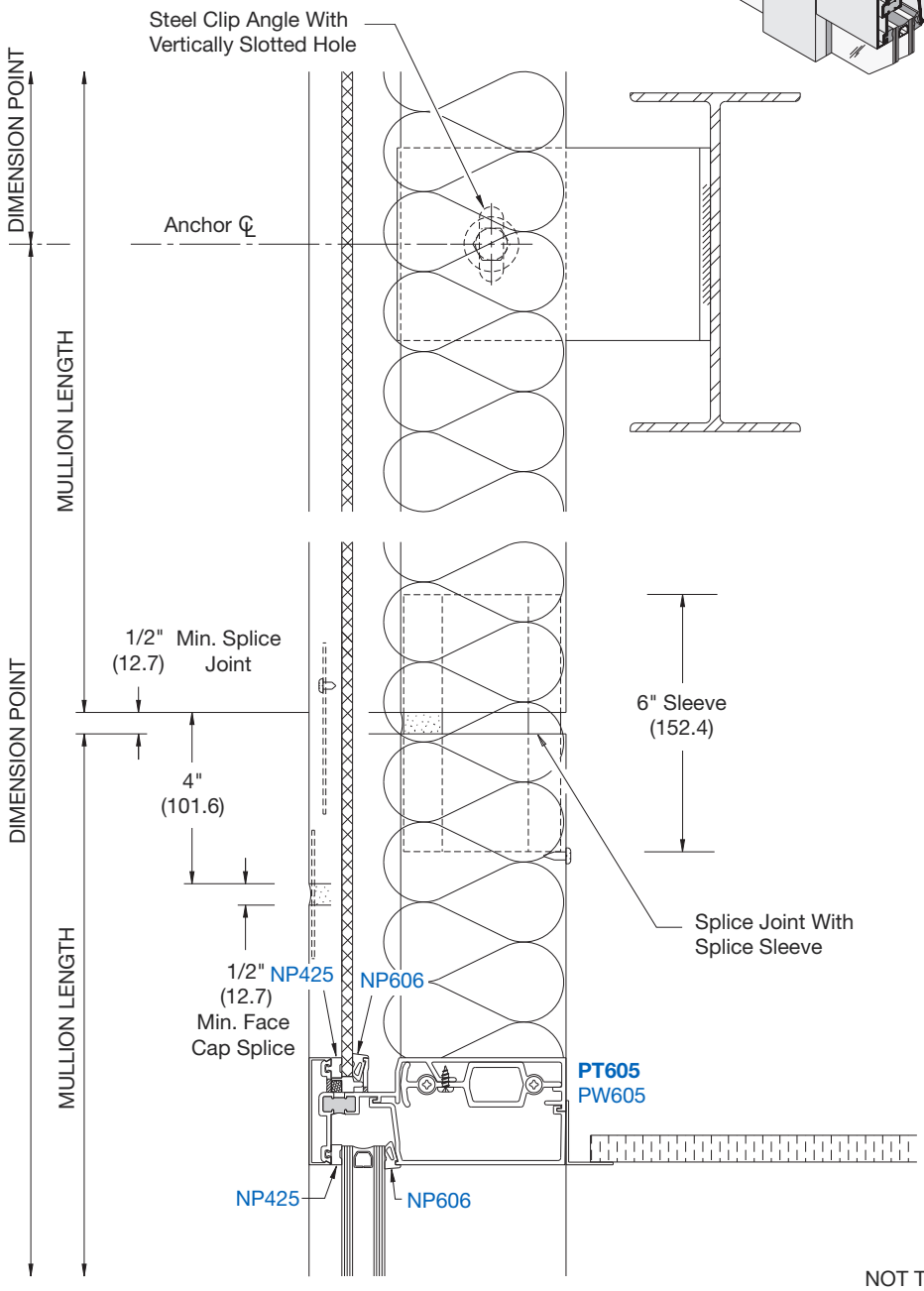

2

EXPANSION ANCHOR (WINDLOAD ANCHOR)

NOTE: Anchor Type and Size varies per job requirements.

3

SPLICE JOINT

NOTE: Joint Width should be based on Mullion Length and Temperature Differential. A 1/2" (12.7) gap allows for 1/4" (6.4) movement.

NOT TO SCALE

CURTAIN WALLS

Windload Charts

Thermally Broken
• Series 4250T

Non Thermal
• Series 4250

VERTICAL MULLIONS FOR 1" (25) GLAZING

Mullions designed for L/175 deflection ratio and for the following allowable working stresses:

Aluminum alloy 6063-T5: allowable stress for windload 12,929 psi. (89 MPa)
Steel reinforcing allowable stress for windload 26,666 psi. (183 MPa)

Curves represent the limit values and are based on criteria for simple beam, uniformly loaded, using the distribution of wind forces on the wall with rectangular loading. Glass is not considered as contributing to resistance of deflection.

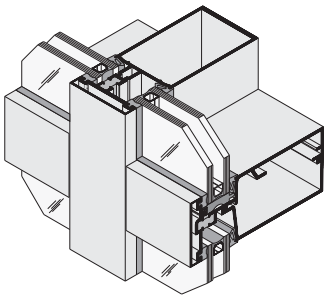

SERIES 4250T
Thermally Broken
Interior Glazed
Curtain Wall

Limitation of vertical mullions for:
CURVES **A** = 15 PSF (718 Pa)
CURVES **B** = 20 PSF (957 Pa)
CURVES **C** = 25 PSF (1197 Pa)
CURVES **D** = 30 PSF (1436 Pa)

P	T	6	0	0

Two digit Part Number prefix ending in "T" represents THERMALLY BROKEN parts. Thermal parts are in **BOLD** print.

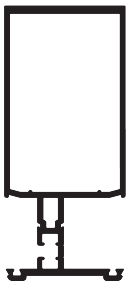

PW600 Vertical (shown)
PT600
I = 7.701 (320.54 x 10^4)
S = 2.698 (44.21 x 10^3)

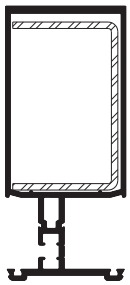

PW600 Vertical (shown)
PT600 with **SS964**
Steel Stiffener
I = 1.996 (83.08 x 10^4)
S = 1.141 (18.70 x 10^3)
IAL+STL = 13.489 (561.45 x 10^4)

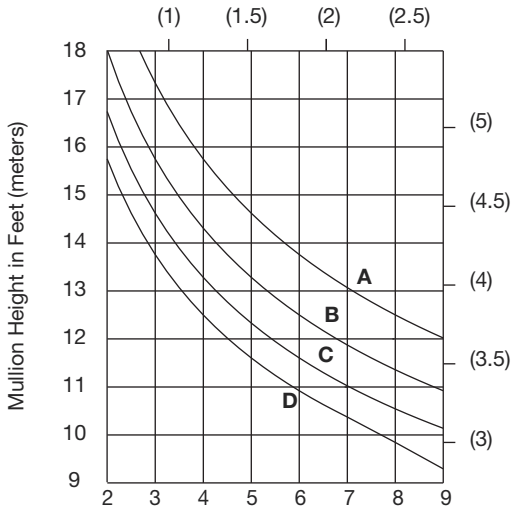

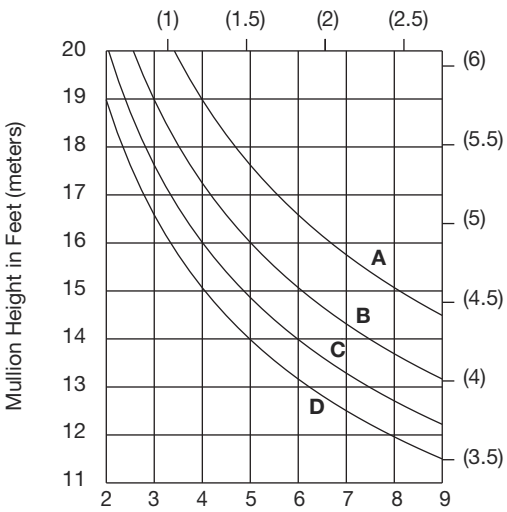

Mullion Spacing in Feet (meters)

CURTAIN WALLS

Windload Charts

VERTICAL MULLIONS FOR 1" (25) GLAZING

Thermally Broken
• Series 4250T

Non Thermal
• Series 4250

Mullions designed for L/175 deflection ratio and for the following allowable working stresses:

Aluminum alloy 6063-T5: allowable stress for windload 12,929 psi. (89 MPa)
Steel reinforcing allowable stress for windload 26,666 psi. (183 MPa)

Curves represent the limit values and are based on criteria for simple beam, uniformly loaded, using the distribution of wind forces on the wall with rectangular loading. Glass is not considered as contributing to resistance of deflection.

Limitation of vertical mullions for:
CURVES **A** = 15 PSF (718 Pa)
CURVES **B** = 20 PSF (957 Pa)
CURVES **C** = 25 PSF (1197 Pa)
CURVES **D** = 30 PSF (1436 Pa)

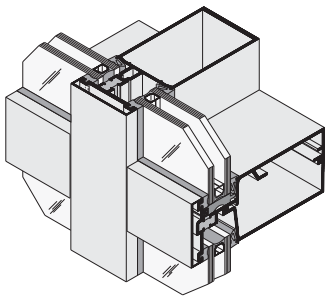

SERIES 4250T
Thermally Broken
Interior Glazed
Curtain Wall

P	T	6	0	0

Two digit Part Number prefix ending in "T" represents THERMALLY BROKEN parts. Thermal parts are in **BOLD** print.

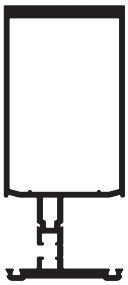

PW610 Heavy Wall Vertical (shown)
PT610
I = 10.413 (433.42 x 10^4)
S = 3.520 (57.68 x 10^3)

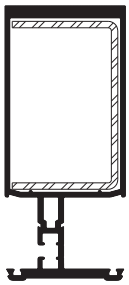

PW610 Heavy Wall Vertical (shown)
PT610 With **SS964**
Steel Stiffener
I = 1.996 (83.08 x 10^4)
S = 1.141 (18.70 x 10^3)
IAL+STL = 16.201 (674.34 x 10^4)

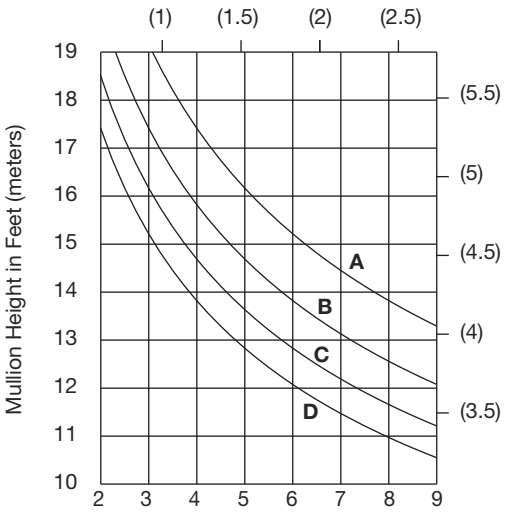

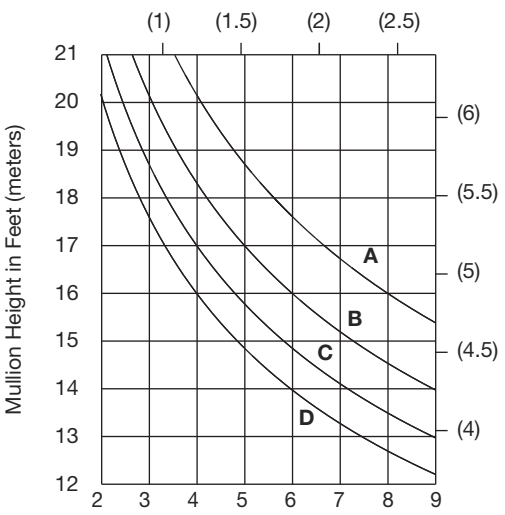

Mullion Spacing in Feet (meters)

CURTAIN WALLS

Deadload Charts

HORIZONTAL MULLIONS FOR 1" (25) GLAZING AND 1/4" (6) SPANDRAL GLAZING

Thermally Broken
- **Series 4250T**

Non Thermal
- **Series 4250**

Deadload charts are based on 1/8" (3.2) maximum deflection at the center point of the horizontal member and on a glass weight of 3.25 psf (15.87 Kg/m²) for 1/4" (6) glass and 6.5 psf (31.74 Kg/m²) for 1" (25) glass.

Glass shall rest on two setting blocks located at:
CURVES **A**: 1/4 points
CURVES **B**: 1/8 points or 8" (203.2) from corners, whichever is larger

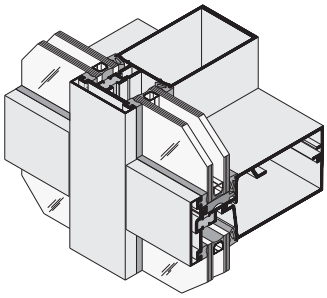

SERIES 4250T
Thermally Broken
Interior Glazed
Curtain Wall

FOR 1" (25) GLAZING

PW604 Horizonal (shown)
PT604
Iyy = .476 (19.81 x 10⁴)

P	T	6	0	0

Two digit Part Number prefix ending in "T" represents THERMALLY BROKEN parts. Thermal parts are in **BOLD** print.

FOR 1/4" (6) SPANDRAL GLAZING CONDITIONS

PW605 Horizonal (shown)
PT605
Iyy = .484 (20.15 x 10⁴)

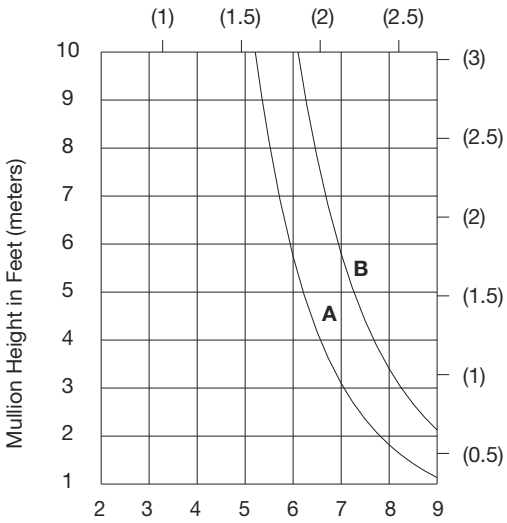

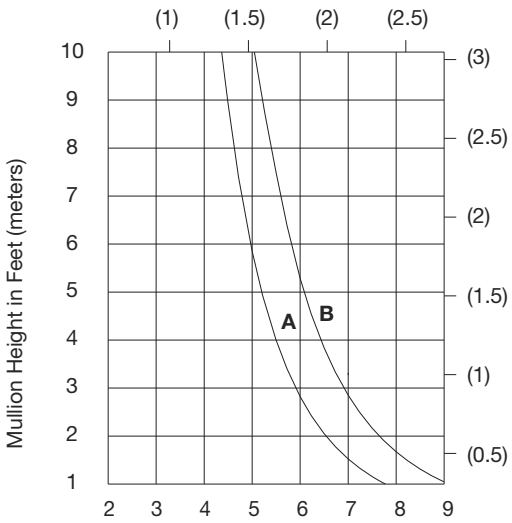

Mullion Spacing in Feet (meters)

CURTAIN WALLS

Accessories

FOR 1/4" (6) AND 1" (25) GLAZING

Thermally Broken
- **Series 4250T**

Non Thermal
- **Series 4250**

PART NO.	DETAIL	DESCRIPTION	PKG. QTY.
AP670	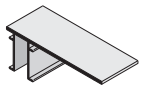	Wall Jamb Anchor at Head and Sill for PW600 and PT600	6
AP671	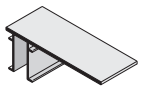	Wall Jamb Anchor at Head and Sill for PW610 and PT610	6
AP660	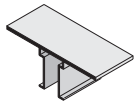	Intermediate Vertical Anchor at Head and Sill for PW600 and PT600	12
AP661	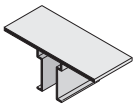	Intermediate Vertical Anchor at Head and Sill for PW610 and PT610	12
SL400	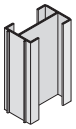	Mullion Splice Sleeve for PW600 and PT600	12
SL408	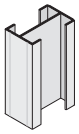	Mullion Splice Sleeve for PW610 and PT610	12
SL690	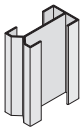	Corner Splice Sleeve for PW630	5
NP425	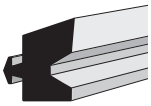	Exterior Gasket	300' Roll
NP606	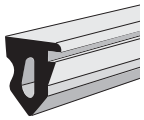	Interior Gasket	200' Roll
NP610	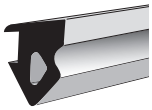	Exterior Replacement Gasket for Spandrel Condition	300' Roll
NP620	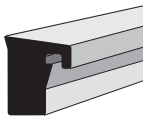	Interior Replacement Gasket for Spandrel Condition	300' Roll

PART NO.	DETAIL	DESCRIPTION	PKG. QTY.
AP603	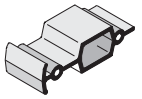	Shear Block for PW604 and PW605 (Includes Screws)	20
AP601	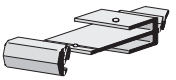	Shear Block for 90 Degree Outside Corner (Includes One Left Block, One Right Block, and Screws)	1 Set
WD600	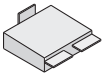	End Dam for Deep Pocket PW600	50
WD601	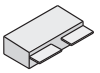	End Dam for Shallow Pocket PW600	50
CP600	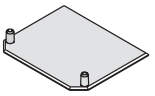	Closure Plate for Mullions	50
CP690	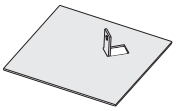	Closure Plate for Corner Mullion	10
SL404		Splice Sleeve for Face of Vertical	12
SL403	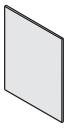	Splice Sleeve for Vertical Face Cap	12
ST197		Screw for SL404 Splice #8 x 3/8" (9.5) PHSMS	100
SS964	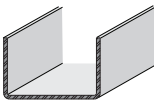	Steel Stiffener Fits in: PW610, PT610	16' (4.88 m) Stock Length
PW616	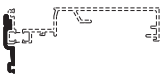	Re-Glazing Leg Adapter	24' (7.3 m) Stock Length

CURTAIN WALLS

Accessories

FOR 1/4" (6) AND 1" (25) GLAZING

Thermally Broken
- **Series 4250T**

Non Thermal
- **Series 4250**

PART NO.	DETAIL	DESCRIPTION	PKG. QTY.
SB650	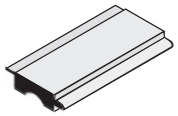	Setting Block for 1" (25) Glass; 4" (101.6) Long	100
SB655	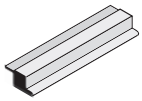	Setting Block for 1/4" (6) Glass; 4" (101.6) Long	100
WB600		Edge Block for Deep Pocket 8" (203.2) Long	50
WB601		Edge Block for Shallow Pocket 6" (152.4) Long	50
UB600	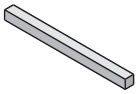	Weep Baffle 4" (101.6) Long	100

PART NO.	DETAIL	DESCRIPTION	PKG. QTY.
WD602		Water Dam for Thermal Reglet of Non-thermal Verticals	50
BA603		Plug Backer for PW614 Deep Pocket Spandrel Adaptor Use With PW615	100
BA602		Plug Backer for PW615 Shallow Pocket Spandrel Adaptor Use With PW614	50
DJ620	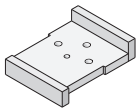	Drill Jig for Horizontal Mullions	1
DJ610	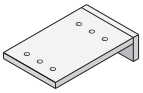	Drill Jig for Vertical Mullions	1

Project: Cancer Center, Fort Worth, TX

CURTAIN WALLS

Table of Contents

Thermally Isolated
- Series 4500
- Series 4500SG

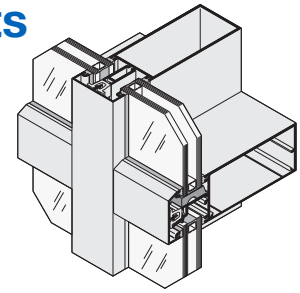

SERIES 4500
Captured Vertical
Glazed Curtain Wall

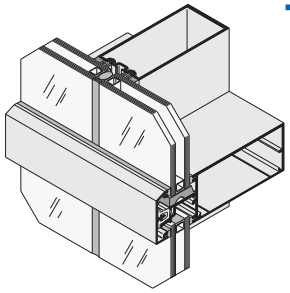

SERIES 4500SG
Structural Silicone Vertical
Glazed Curtain Wall

SECTION J7 — PAGE

SPECIFICATIONS 02-J7
TECHNICAL DATA 03-J7
SPECIAL FEATURES ..... 04-J7 and 05-J7
TYPICAL DETAILS ..... 06-J7 thru 16-J7
WINDLOAD CHARTS ..... 17-J7 thru 22-J7
DEADLOAD CHARTS 23-J7
ACCESSORIES ..... 24-J7 thru 29-J7

Project: Kaiser Medical Center, Downey, CA

Due to the diversity in state/provincial, local, and federal laws and codes that govern the design and application of architectural products, it is the responsibility of the individual architect, owner, and installer to ensure that products selected for use on projects comply with all applicable building codes and laws. U.S. Aluminum exercises no control over the use or application of its products, glazing materials, and operating hardware, and assumes no responsibility thereof.

The rapidly changing technology within the architectural aluminum products industry demands that U.S. Aluminum reserve the right to revise, discontinue or change any product line, specification or electronic media without prior written notice.

NOTE: Dimensions in parentheses ( ) are millimeters unless otherwise noted.
Other metric units shown in this publication are:

m - meter	Kg - kilogram
Pa - pascal	KPa - kilopascal
MPa - megapascal	

CURTAIN WALLS

Specifications

Thermally Isolated
- Series 4500
- Series 4500SG

SECTION 08 44 13 ALUMINUM CURTAIN WALL SYSTEMS

I. GENERAL DESCRIPTION
Work Included: Furnish all necessary materials, labor, and equipment for the complete installation of aluminum framing as shown on the drawings and specified herein. *(Specifier Note: It is suggested that related items such as aluminum entrance doors, glass, and sealants be included whenever possible).*
Work Not Included: Structural support of the framing system, interior closures and trim. *(Specifier list other exclusions).*
Related Work Specified Elsewhere: *(Specifier list)*.

QUALITY ASSURANCE
Drawings and specifications are based on the Series 4500 Curtain Wall System as manufactured by U.S. Aluminum. Whenever substitute products are to be considered, supporting technical literature, samples, drawings, and performance data must be submitted 10 days prior to bid in order to make a valid comparison of the products involved. Test reports certified by an independent test laboratory must be made available upon request.

PERFORMANCE REQUIREMENTS
Air Infiltration: shall be tested in accordance with ASTM E 283. Infiltration shall not exceed .06 CFM per square foot (.0003m^3/sm^2) of fixed area when tested at 6.24 psf (300 Pa).
Water Infiltration: shall be tested in accordance with ASTM E 331. No water penetration at test pressure of 20 psf (958 Pa).
Structural Performance: shall be tested in accordance with ASTM E 330 and based on:
- Maximum deflection of L/175 of the span
- Allowable stress with a safety factor of 1.65

The system shall perform to this criteria under a windload of *(Specify)* psf. System shall exceed maximum seismic lateral displacement requirements specified in section 1628.8.2 of the Uniform Building Code, 1994 edition. Upon successful completion of the Phase I seismic testing, the curtain wall shall once again be subjected to and must successfully pass the air and water infiltration tests specified above before proceeding to Phase II testing.
Thermal Performance: Series 4500 shall be tested in accordance with AAMA 1503, and NFRC-100.
Testing Procedures: ASTM 283, E 331, and E 330 - Laboratory performance testing. AAMA 503-08 - Newly installed curtain walls. AAMA 511-08 - Installed curtain walls after six months.

II. PRODUCTS MATERIALS
Extrusions shall be 6063-T5 alloy and temper (ASTM B221 alloy T5 temper). Fasteners, where exposed, shall be aluminum, stainless steel or zinc plated steel in accordance with ASTM A 164. Perimeter anchors shall be aluminum or steel, providing the steel is properly isolated from the aluminum. Glazing gaskets shall be E.P.D.M. elastomeric extrusions.

FINISH
All exposed framing surfaces shall be free of scratches and other serious blemishes. Aluminum extrusions shall be given a caustic etch followed by an anodic oxide treatment to obtain... *(Specify one of the following)*:
_____#11 Clear anodic coating
_____#22 Dark Bronze anodic coating
_____#33 Black anodic coating
A Fluoropolymer paint coating conforming with the requirements of AAMA 2605. Color shall be *(Specify a U.S. Aluminum standard color)*.

FABRICATION
Framing members shall provide for straight-in glazing on all sides with through sight lines and no projecting stops or face joints. Glass and panel framing shall be two part construction consisting of a back member and face section. The system shall provide for complete thermal isolation. Vertical and horizontal framing members shall have a nominal face dimension of 2-1/4" (57.2). Overall depth shall be *(Specify)*.

All exterior and interior members shall be internally joined with a non-reversible and non-conductive injection molded thermoplastic connector capable of withstanding a direct pull of not less than 350 pounds (159 kg) each. The system shall have an integral extruded internal flashing for the head and all intermediate horizontals to provide continuous flashing of any infiltrated water to the exterior through pressure relieved horizontal weep holes.

Face clips shall be such a design as to provide for the exterior face member to be engaged by pushing it straight into the clip. The face clips shall be designed so they can be easily removed for deglazing.

III. EXECUTION INSTALLATION
All glass framing shall be set in correct locations as shown in the details and shall be level, square, plumb, and in alignment with other work in accordance with the manufacturer's installation instructions and approved shop drawings. All joints between framing and the building structure shall be sealed in order to secure a watertight installation.

PROTECTION AND CLEANING
After installation the General Contractor shall adequately protect exposed portions of aluminum surfaces from damage by grinding and polishing compounds, plaster, lime, acid, cement or other contaminants. The General Contractor shall be responsible for final cleaning.

CURTAIN WALLS

Technical Data

Thermally Isolated
- Series 4500
- Series 4500SG

The Series 4500 and 4500SG Curtain Walls feature pressure relieved horizontals with a unique, integral **UNIflash**™ System to literally sweep infiltrated water to the exterior. **UNIflash**™ eliminates the secondary operation of installing rigid vinyl internal flashing in horizontals as required by similar systems. Exterior and interior members are internally joined with a non-conductive injection molded thermoplastic connector providing total thermal isolation which allows superior thermal performance. Dual colors can be achieved by specifying different finishes for exterior face members and interior mullions. The system features either stick or panel type erection with no exposed joint fasteners.

Series 4500SG is offered in stick or panel erected systems combining the horizontal members of Series 4500 with structural silicone glazed vertical mullions. The two-sided silicone system creates the appearance of a glass wall with horizontal feature strips.

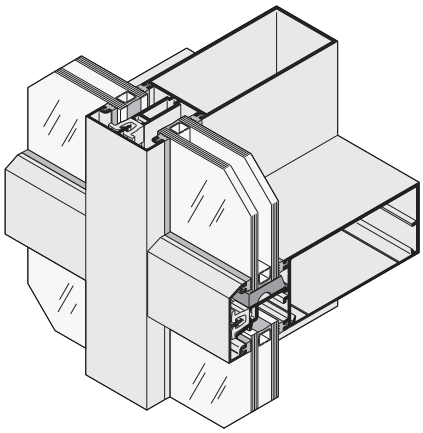

SERIES 4500
Captured Vertical Glazed Curtain Wall

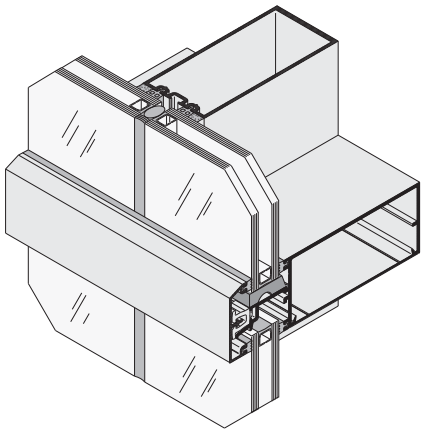

SERIES 4500SG
Structural Silicone Vertical Glazed Curtain Wall

SERIES	FACE WIDTH	BACK MEMBER DEPTH	OVERALL DEPTH	GLAZING INFILL	GLAZING METHOD	APPLICATIONS
4500 4500SG	2-1/4" (57.2)	4" (101.6) 5" (127) 8" (203.2)	6" (152.4) 7" (177.8) 10" (254)	1/4" (6) or 1" (25)	Exterior	Low to Mid-Rise Buildings Where Exterior Glazing is Desired

GLASS SIZES*	
Glass Width and Glass Height	= Daylight Opening + 1" (25.4)
Refer to Details for Glass Bites at Structural Silicone Mullions	

* This formula does not take into account glass tolerances. Consult glass manufacturer before ordering glass.

USA Patent No. 5,839,236; UK Patent No. 9802018.3; Canada Patent No. 2,228,181

CURTAIN WALLS

Special Features

Thermally Isolated
- Series 4500
- Series 4500SG

Injection Molded End Dams at vertical to horizontal joints ensure any moisture that gets in the system is flushed out. For more information on accessories, see pages 24-J7 through 29-J7.

NOTE: To accelerate installation times with pinpoint accuracy of Horizontal Shear Blocks to Curtain Wall Mullions see pages 56-P1 and 57-P1.

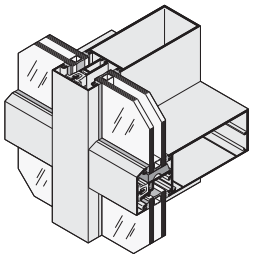

SERIES 4500
Captured Vertical Glazed Curtain Wall

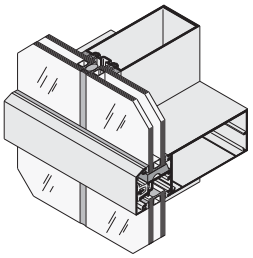

SERIES 4500SG
Structural Silicone Vertical Glazed Curtain Wall

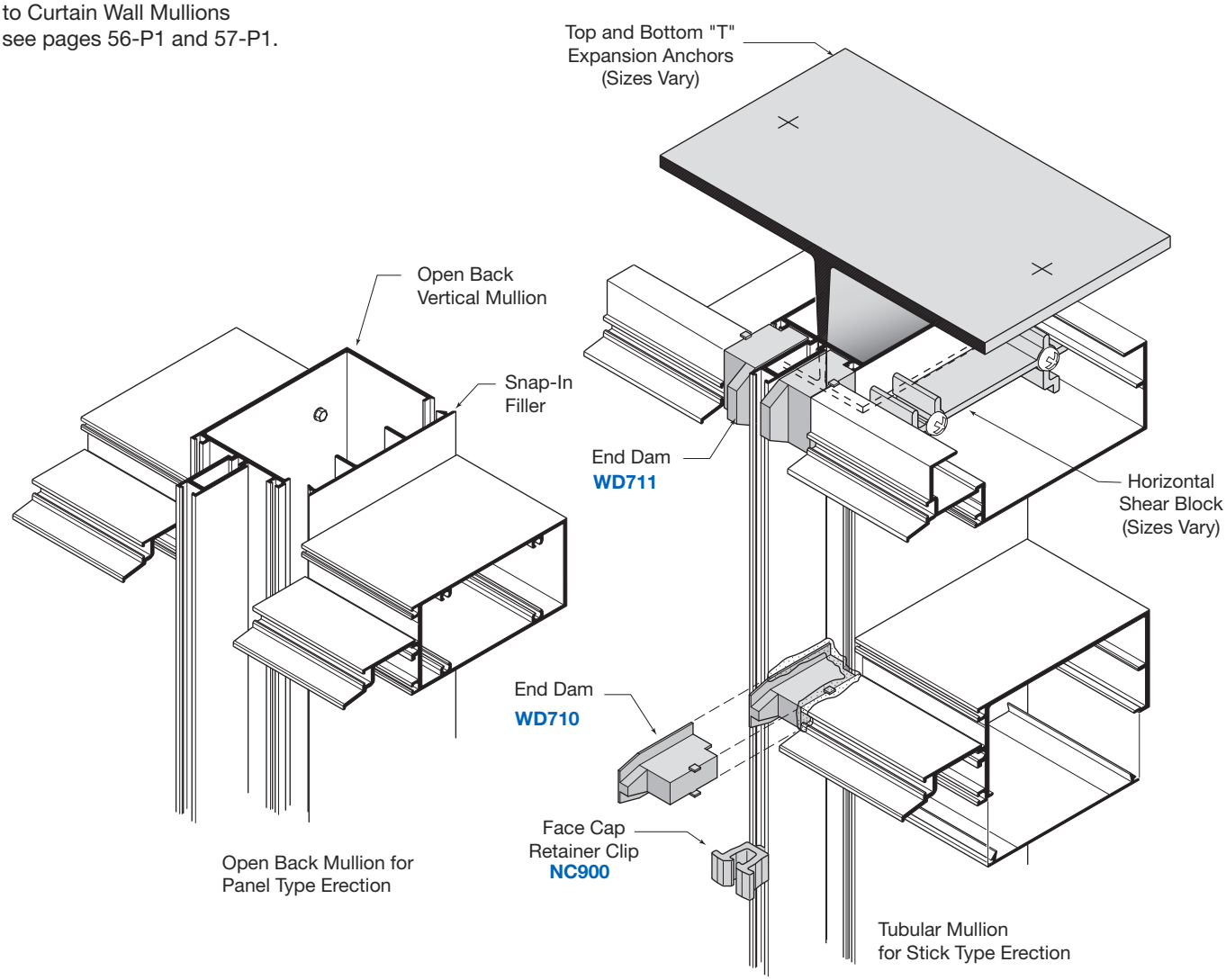

The two-piece vertical adds the versatility of screw race joinery and panel installation for window wall applications. A tubular horizontal attaches to the vertical and filler plate through screw splines. Open back head and sill horizontals allow for easy access for anchorage.

CURTAIN WALLS

Special Features

Thermally Isolated
• Series 4500SG

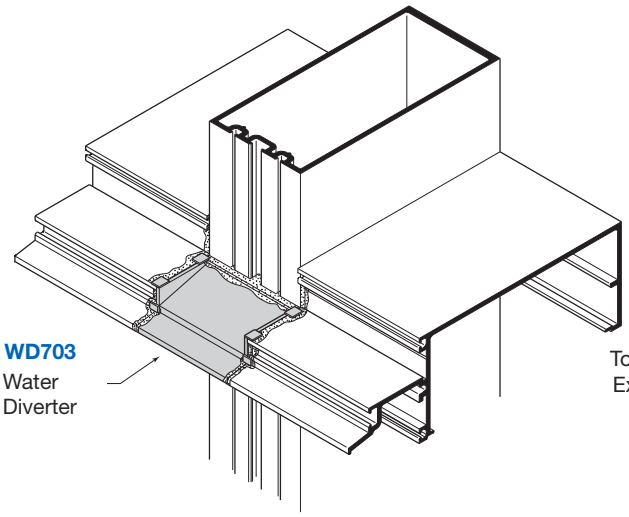

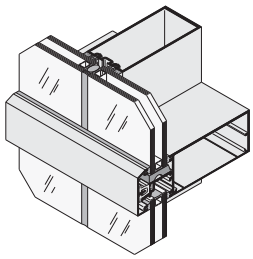

SERIES 4500SG
Structural Silicone Vertical
Glazed Curtain Wall

Injection Molded Water Diverters continue the patented integral **UNIflash™** design in the silicone glazed system. See page 28-J7 for additonal information.

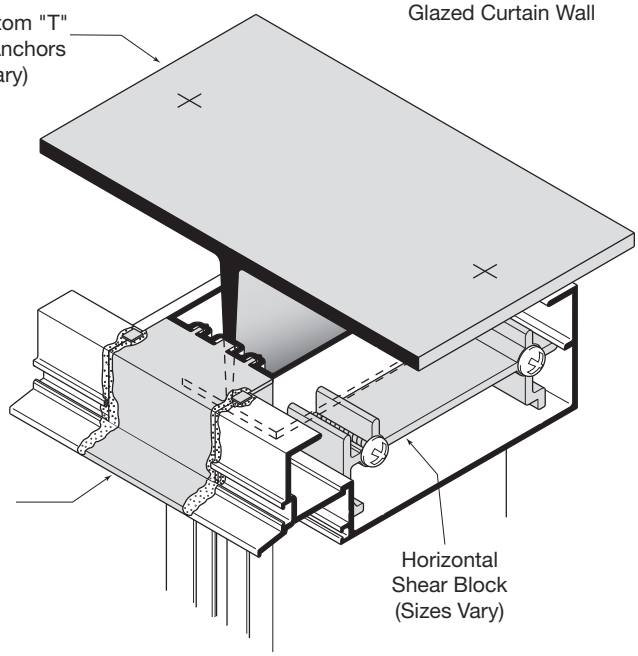

NOTE: To accelerate installation times with pinpoint accuracy of Horizontal Shear Blocks to Curtain Wall Mullions see pages 56-P1 and 57-P1.

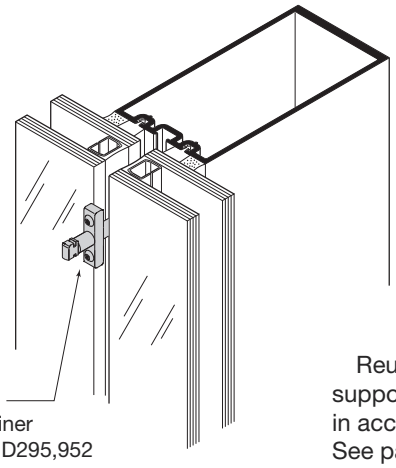

Reusable Twist-In Temporary Glass Retainers are used to support the glass until the structural silicone has fully cured in accordance with silicone manufacturer's recommendations. See page 28-J7 for additional information.

GLAZING OPTIONS

GLAZING	EXTERIOR GASKETS	INTERIOR GASKETS	POCKET REDUCER	HORIZONTAL FACE CAPS	VERTICAL FACE CAPS	SETTING BLOCK
1/4" (6)	NP726	NP716	TW709	TW917	TW912	SB725
1" (25)	NP726	NP716		TW917	TW912	SB710

CURTAIN WALLS

Typical Details

Thermally Isolated
- Series 4500
- Series 4500SG

SHEAR BLOCK ASSEMBLY FOR 1" (25) GLAZING

7" (177.8) System in Bold
6" (152.4) System Dashed

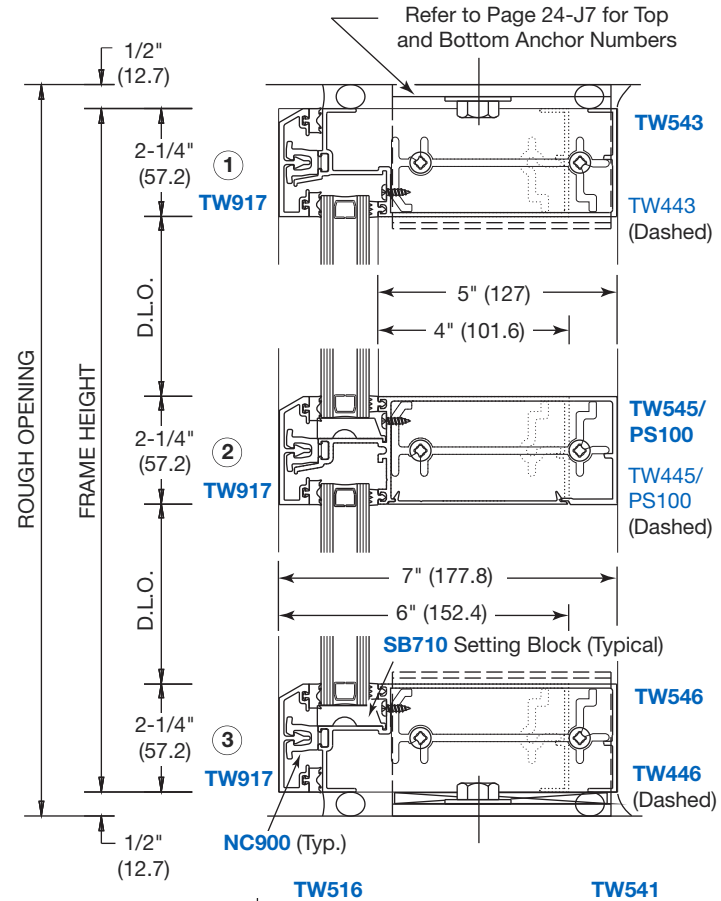

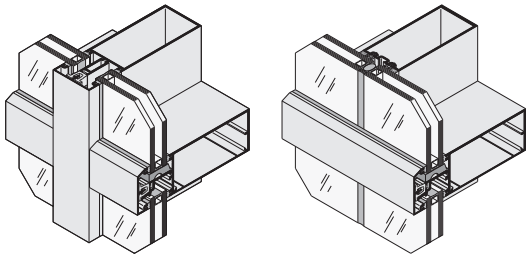

SERIES 4500
Captured Vertical Glazed Curtain Wall

SERIES 4500SG
Structural Silicone Vertical Glazed Curtain Wall

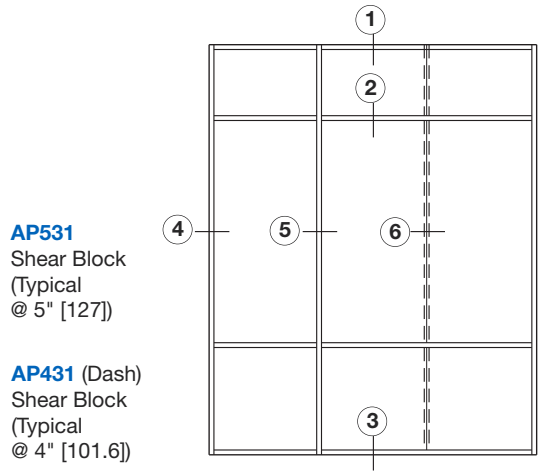

TYPICAL ELEVATION

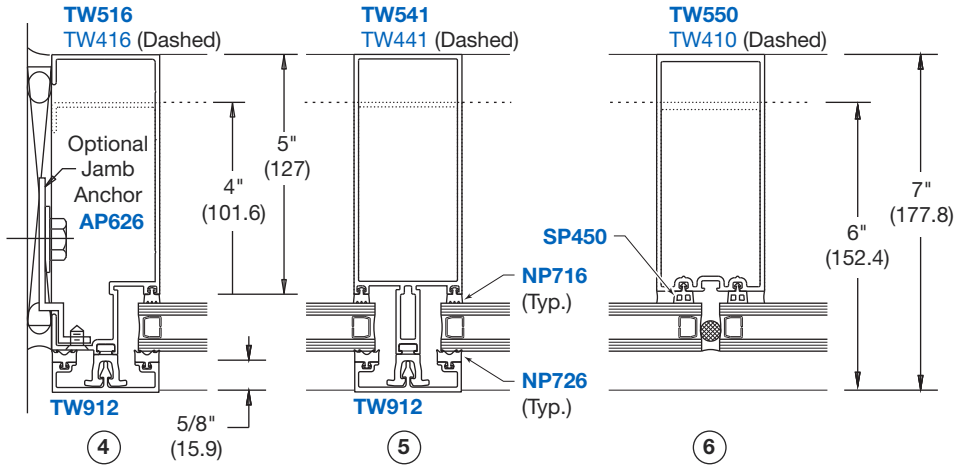

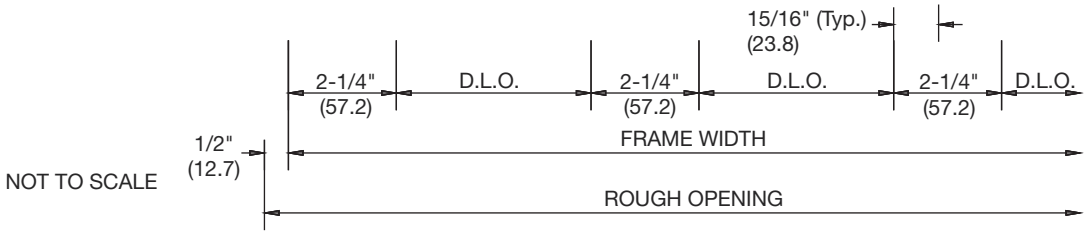

NOT TO SCALE

CURTAIN WALLS

Typical Details

Thermally Isolated
- Series 4500
- Series 4500SG

PANEL ASSEMBLY FOR 1" (25) GLAZING

7" (177.8) System in Bold
6" (152.4) System Dashed

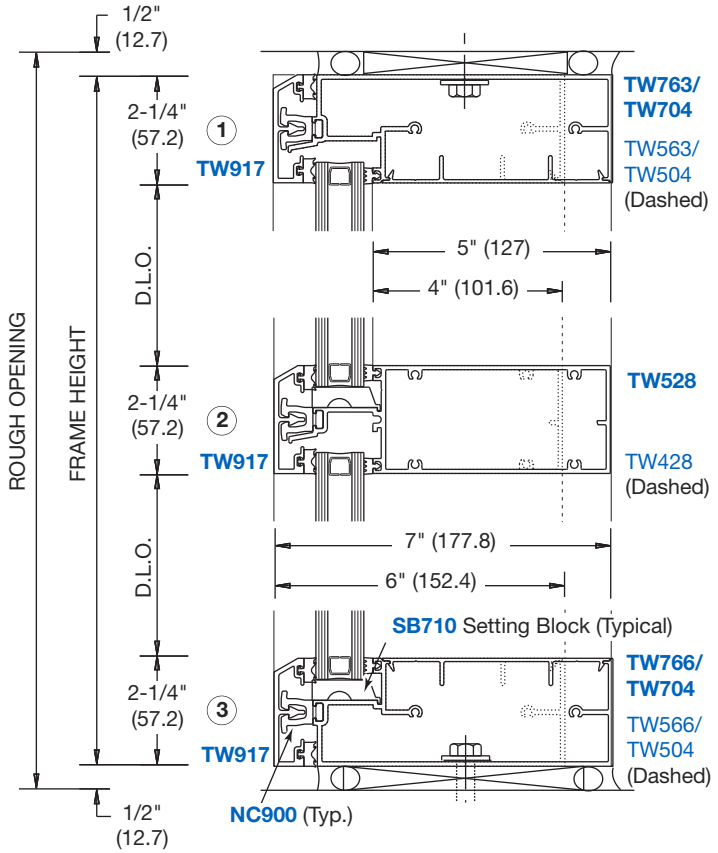

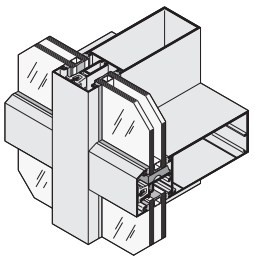

SERIES 4500
Captured Vertical Glazed Curtain Wall

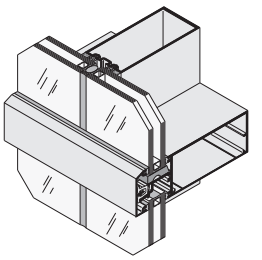

SERIES 4500SG
Structural Silicone Vertical Glazed Curtain Wall

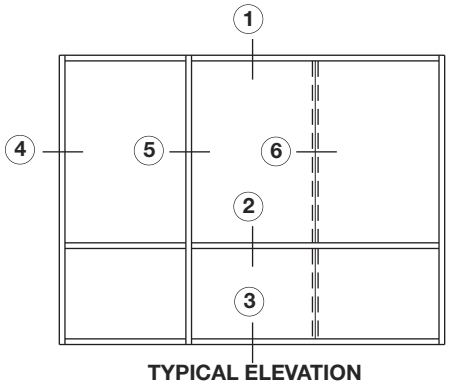

TYPICAL ELEVATION

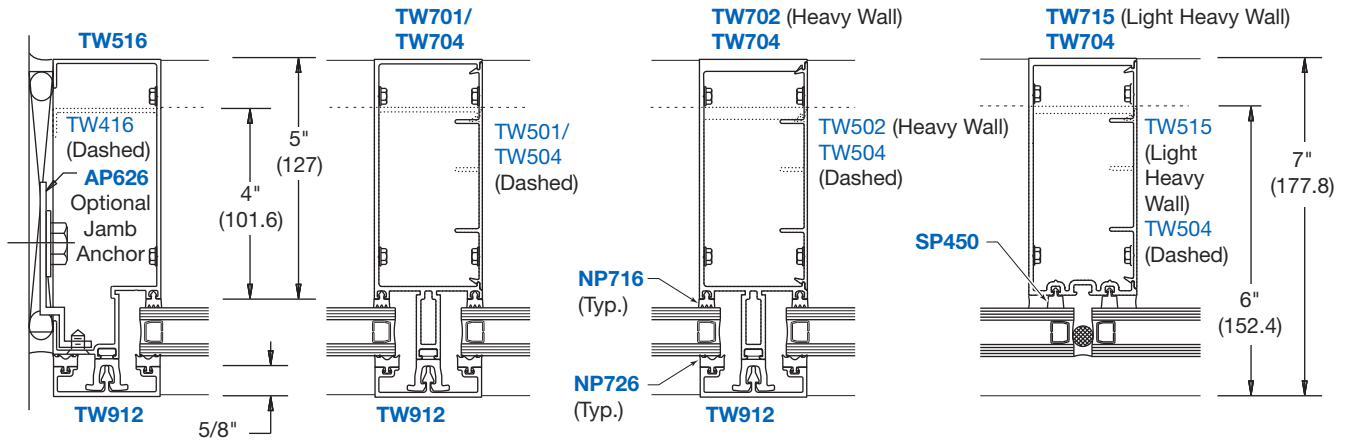

CURTAIN WALLS

Typical Details

Thermally Isolated
- Series 4500
- Series 4500SG

HIGH PERFORMANCE "SUPER MULLION" FOR 1" (25) GLAZING

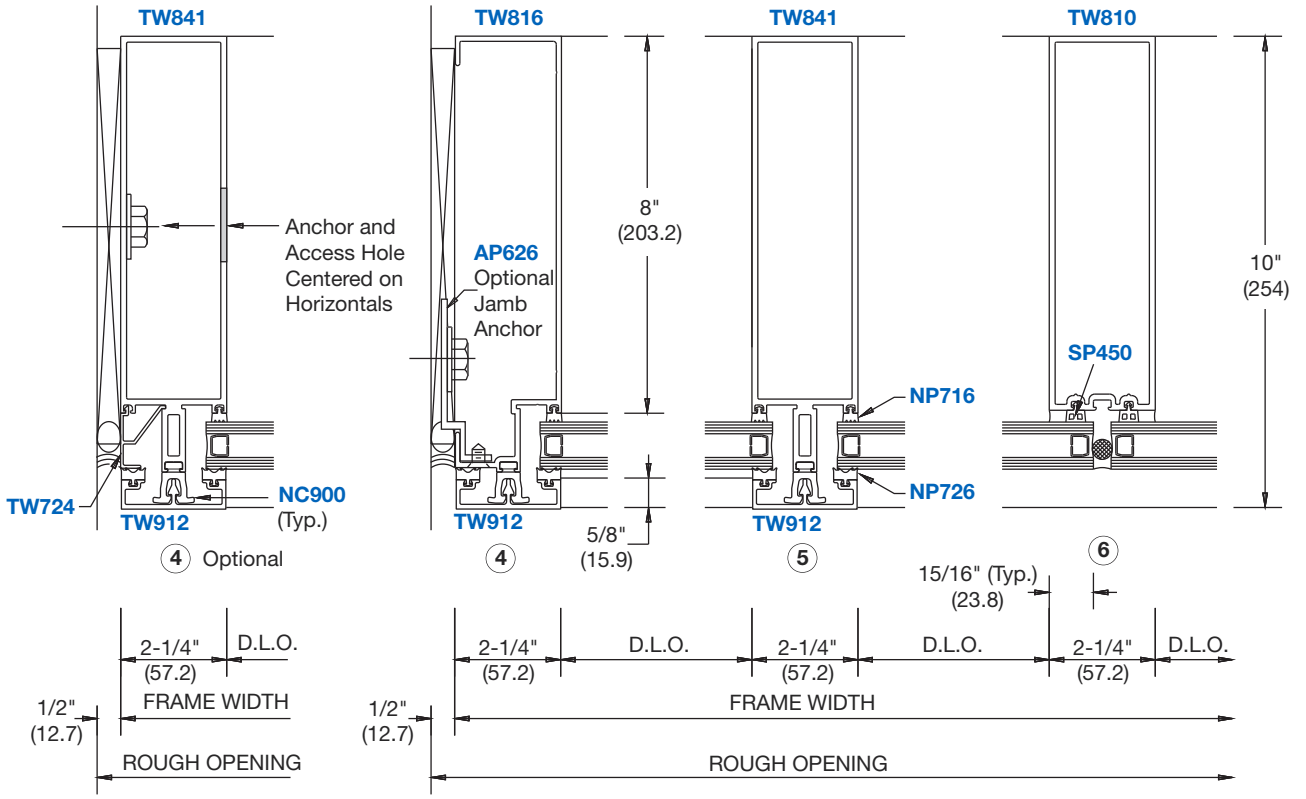

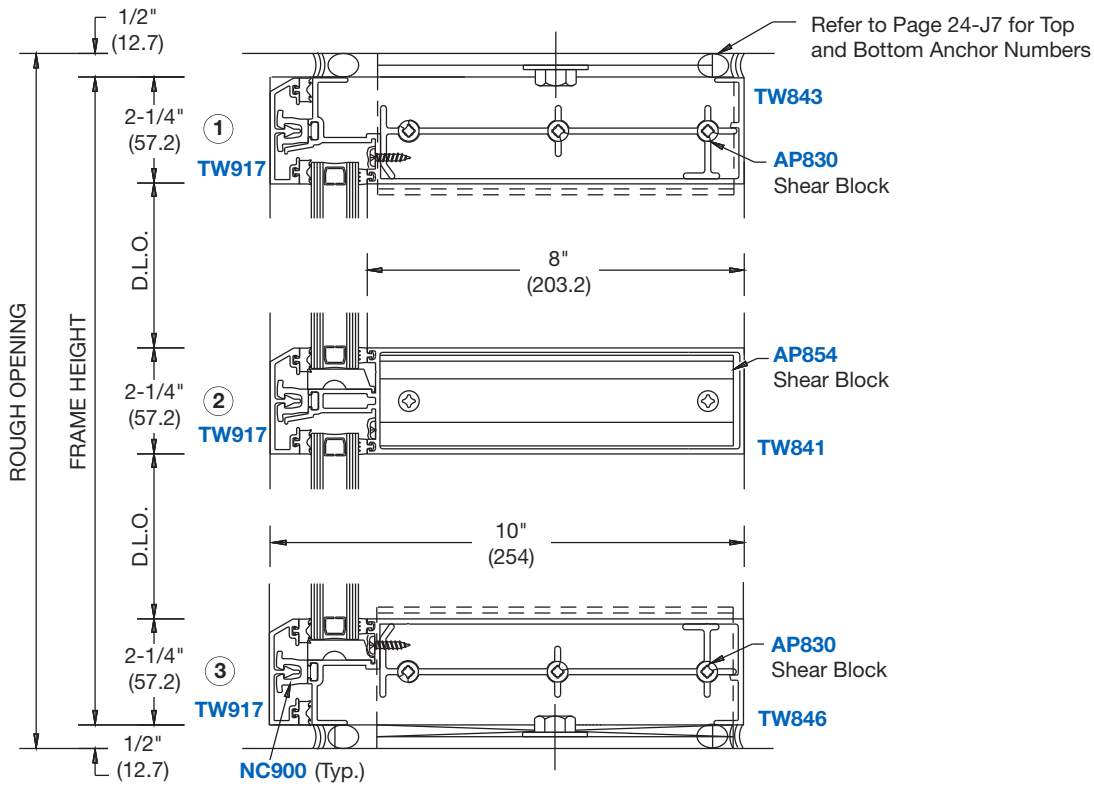

CURTAIN WALLS

Typical Details

Thermally Isolated • Series 4500

90 DEGREE CORNERS

7" (177.8) and 10" (254) System in Bold
6" (152.4) System Dashed

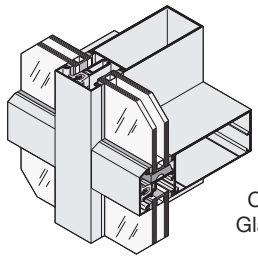

SERIES 4500
Captured Vertical Glazed Curtain Wall

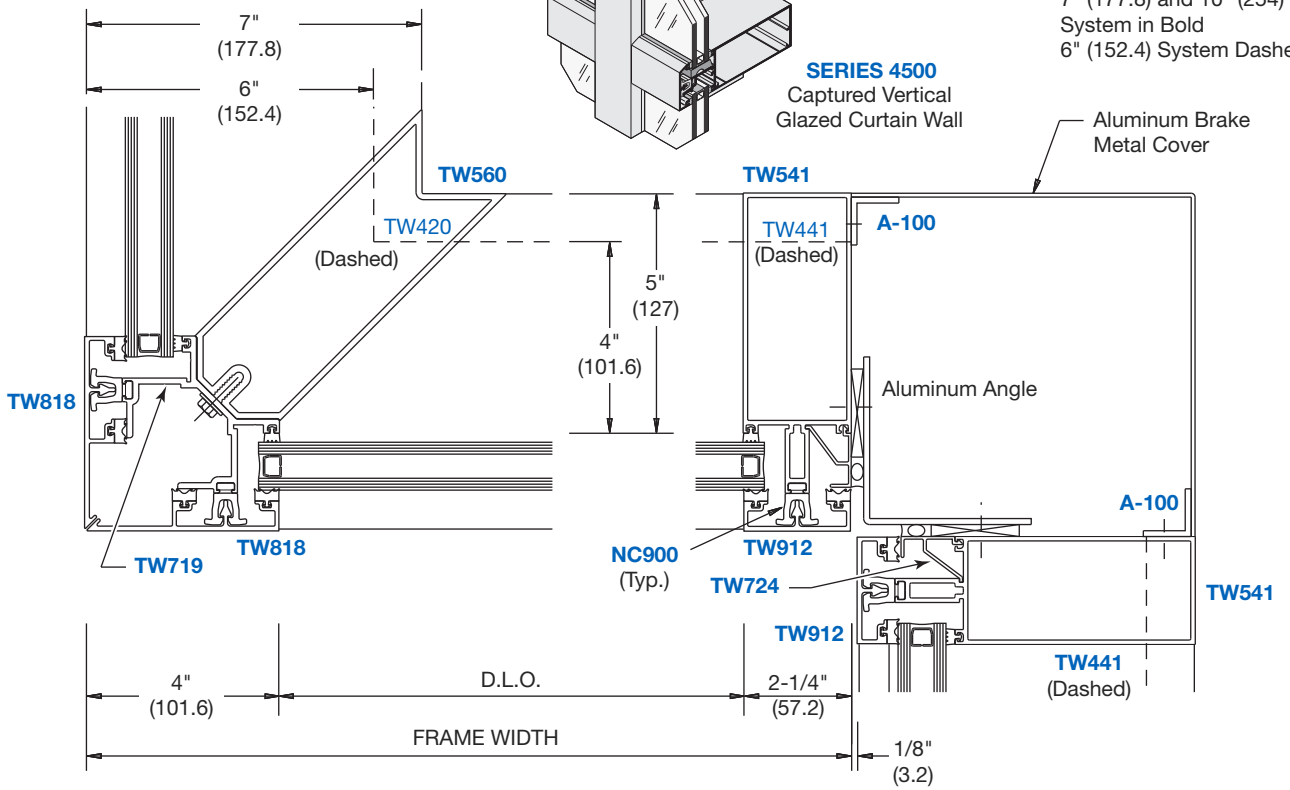

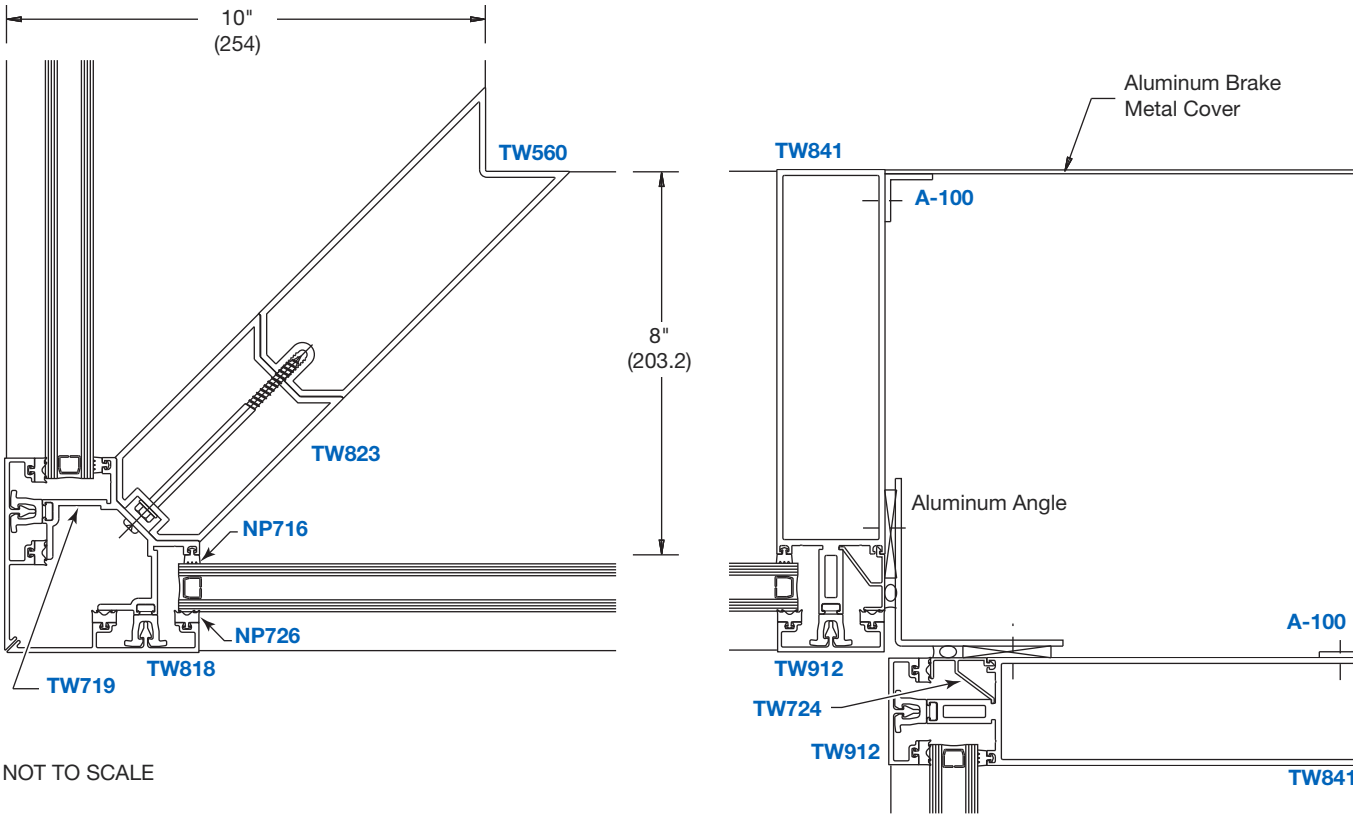

NOT TO SCALE

CURTAIN WALLS

Typical Details

Thermally Isolated
• Series 4500SG

STRUCTURAL SILICONE GLAZED CORNER CONDITIONS FOR 1" (25) GLAZING

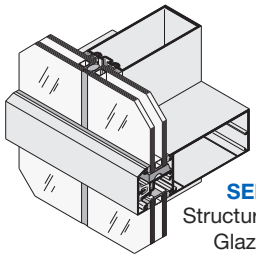

SERIES 4500SG
Structural Silicone Vertical Glazed Curtain Wall

7" (177.8) System in Bold
6" (152.4) System Dashed

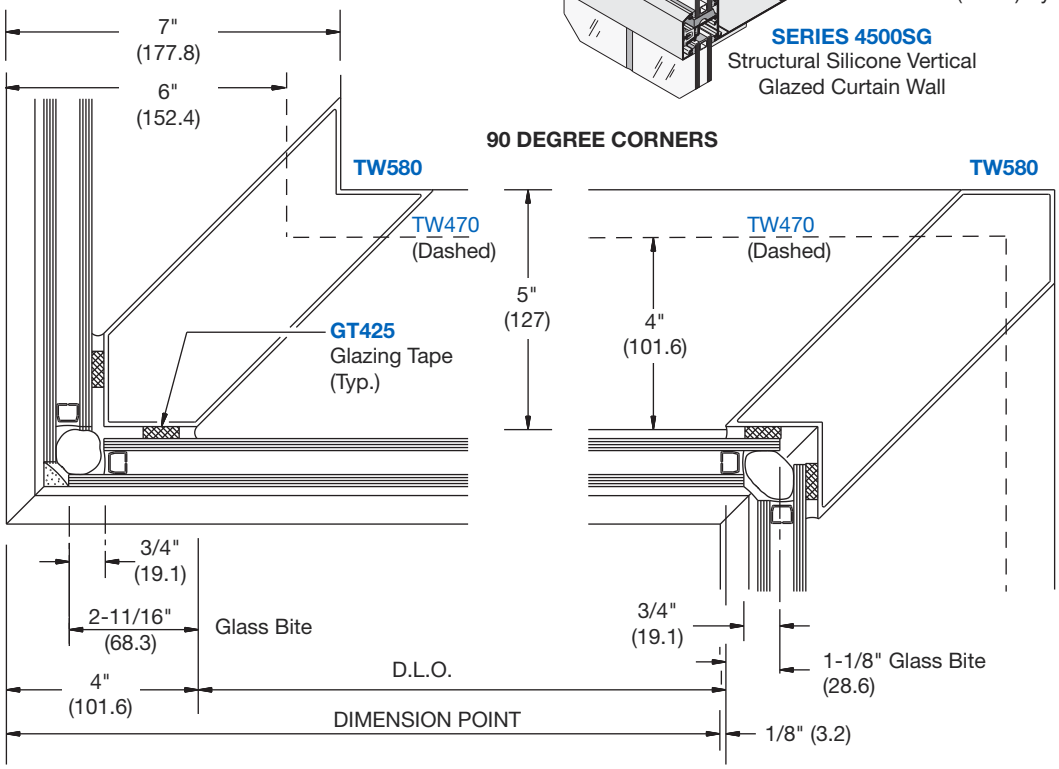

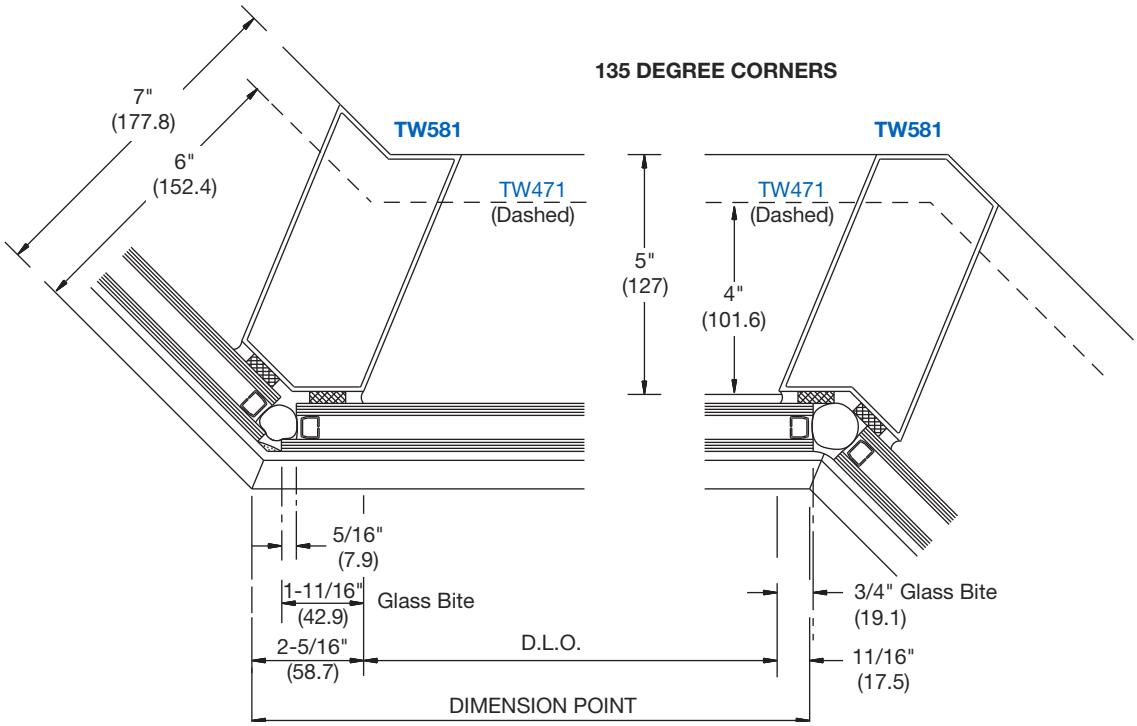

NOT TO SCALE

CURTAIN WALLS

Typical Details

Thermally Isolated • Series 4500

7" (177.8) System in Bold
6" (152.4) System Dashed

DOUBLE ACTING CENTER HUNG DOORS AND FRAMING - 1" (25) GLAZING

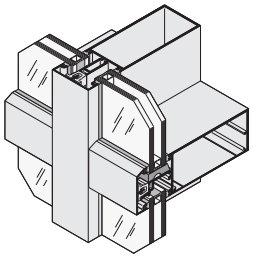

SERIES 4500
Captured Vertical
Glazed Curtain Wall

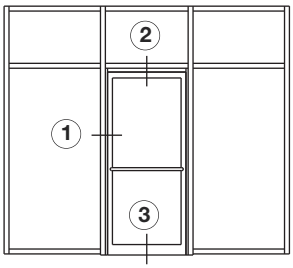

TYPICAL ELEVATION

NOTE: 5" (127) Back Members Shown; 4" (101.6) and 8" (203.2) Members Similar

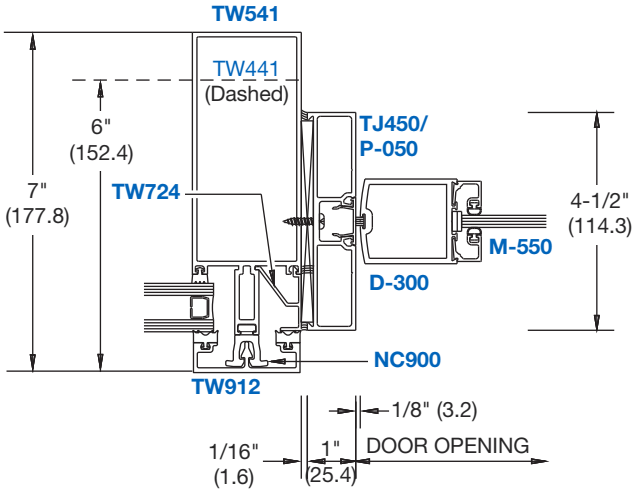

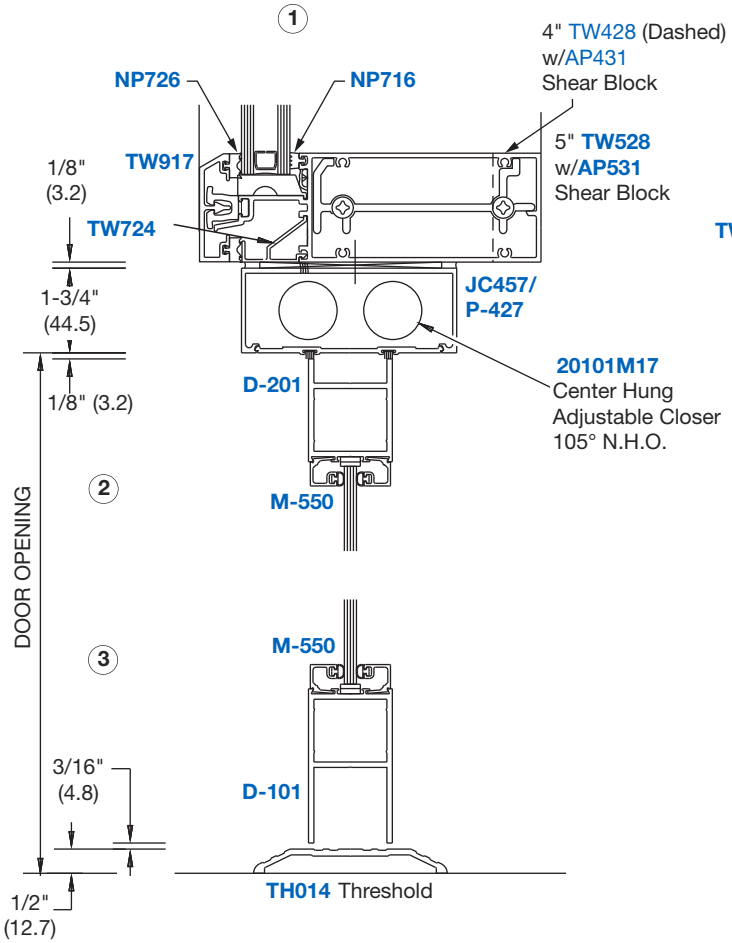

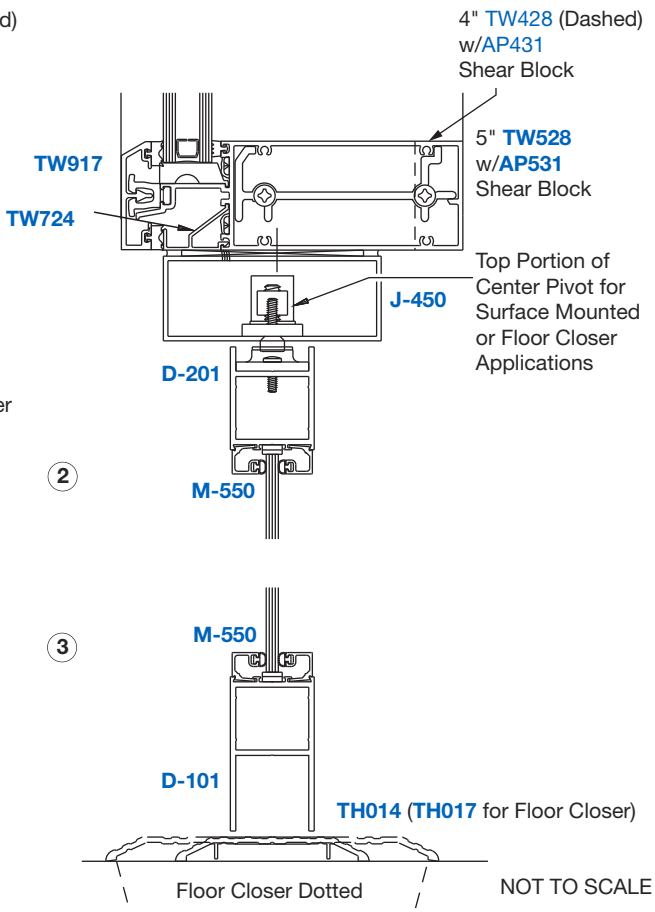

CURTAIN WALLS

Typical Details

Thermally Isolated • Series 4500

7" (177.8) System in Bold
6" (152.4) System Dashed

OFFSET PIVOT OR BUTT HUNG DOORS AND FRAMING - 1" (25) GLAZING

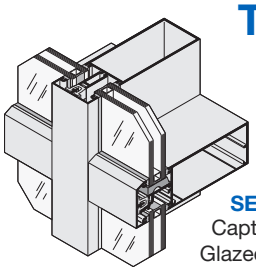

SERIES 4500
Captured Vertical
Glazed Curtain Wall

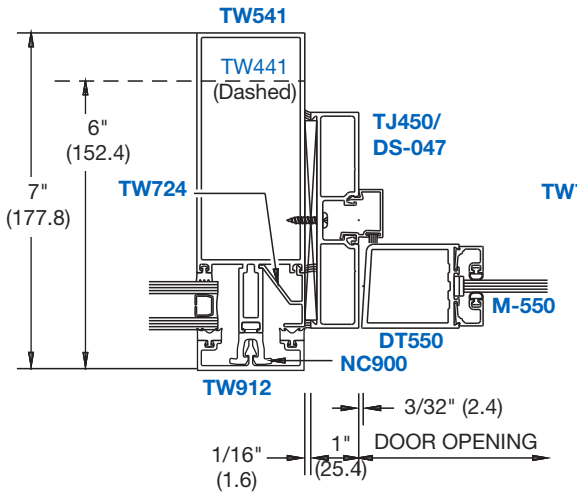

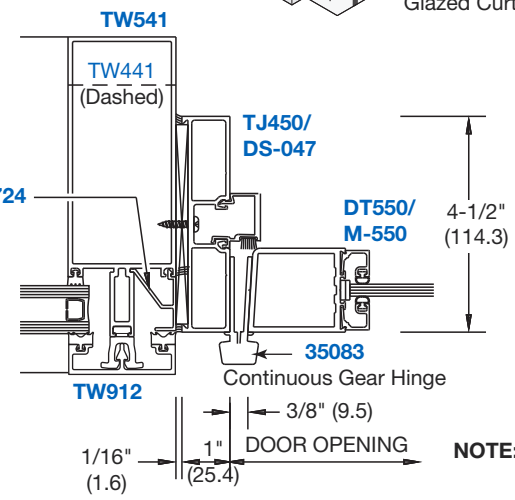

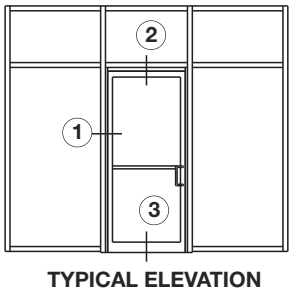

TYPICAL ELEVATION

NOTE: 5" (127) Back Members Shown; 4" (101.6) and 8" (203.2) Members Similar

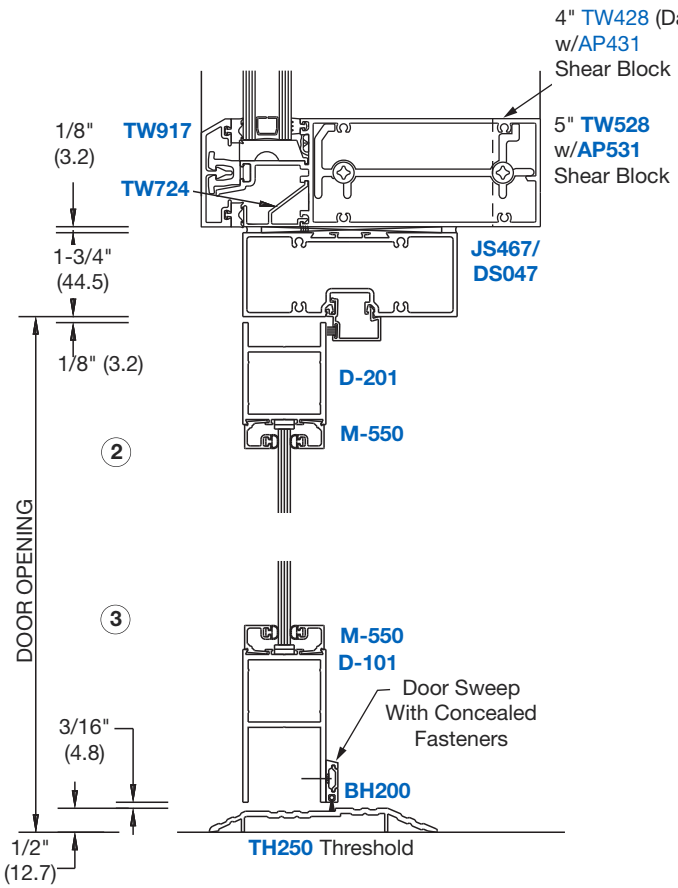

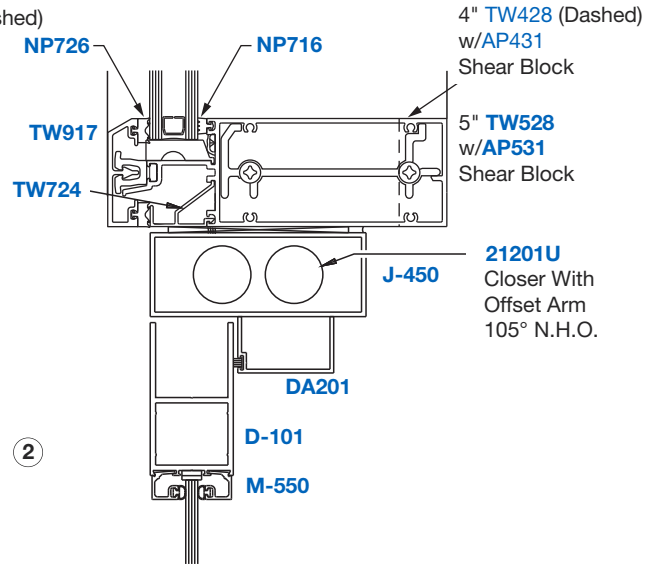

NOT TO SCALE

CURTAIN WALLS

Typical Details

Thermally Isolated
- Series 4500
- Series 4500SG

7" (177.8) System in Bold
6" (152.4) System Dashed

1" (25) TO 1/4" (6) TRANSITION GLAZING

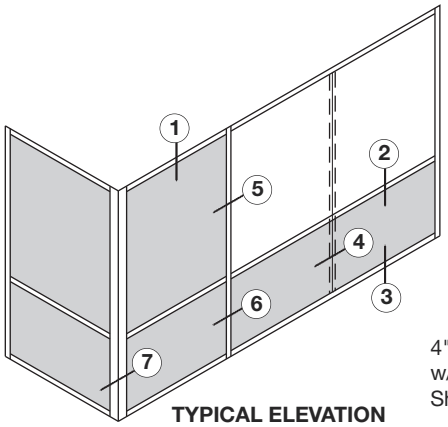

TYPICAL ELEVATION

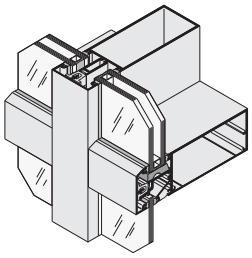

SERIES 4500
Captured Vertical Glazed Curtain Wall

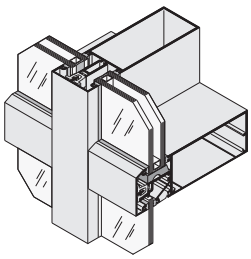

SERIES 4500SG
Structural Silicone Vertical Glazed Curtain Wall

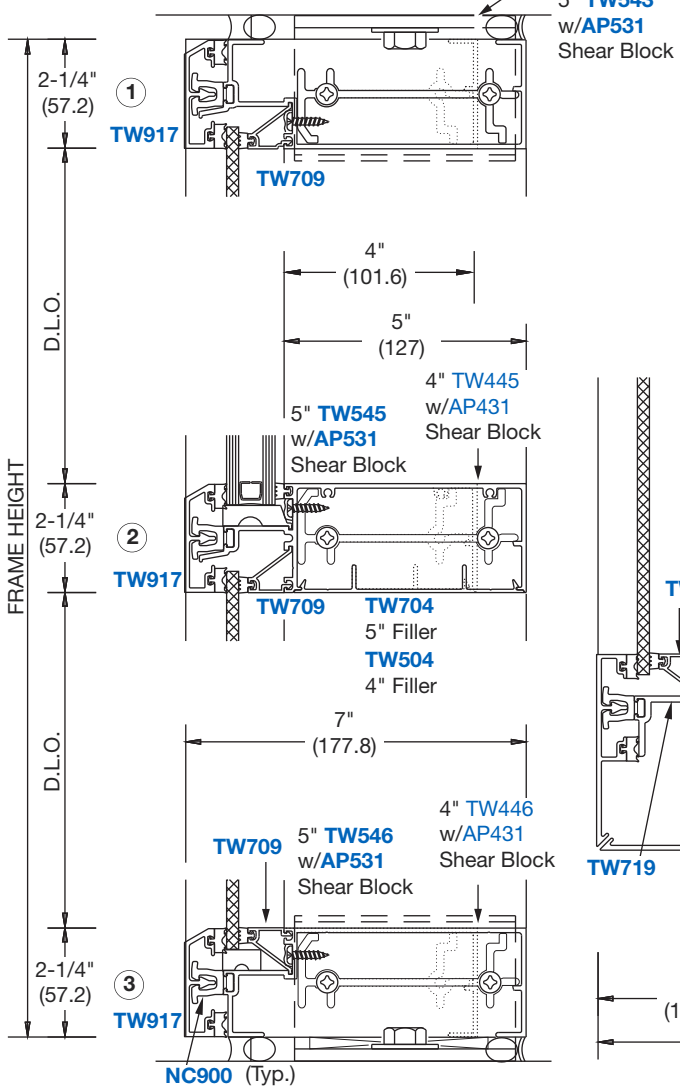

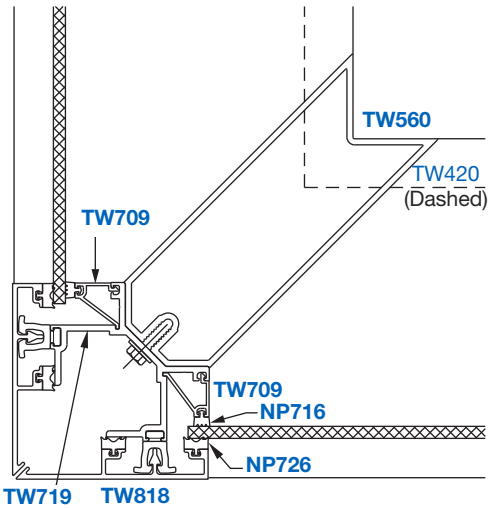

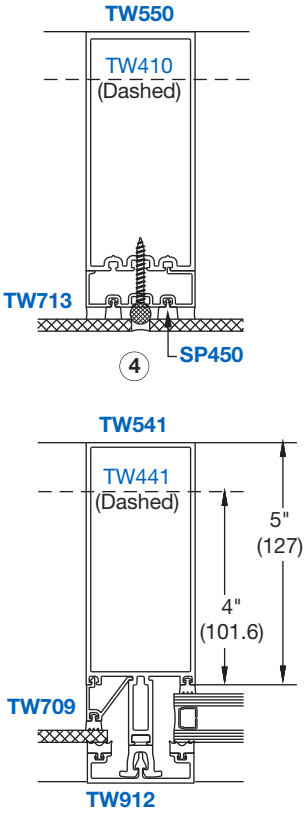

NOT TO SCALE

CURTAIN WALLS

Typical Details

Thermally Isolated
• Series 4500SG

7" (177.8) System in Bold
6" (152.4) System Dashed

STRUCTURAL SILICONE GLAZED CORNER CONDITIONS FOR 1" (25) TO 1/4" (6) TRANSITION GLAZING

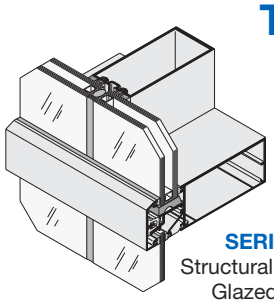

SERIES 4500SG
Structural Silicone Vertical Glazed Curtain Wall

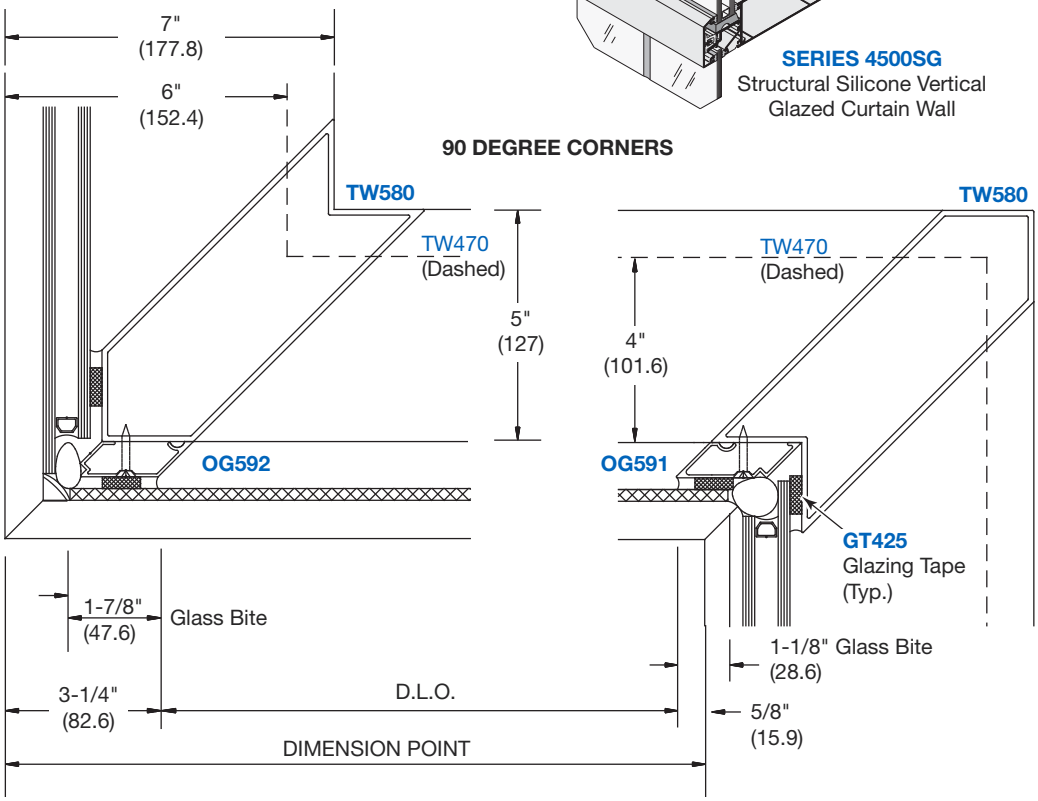

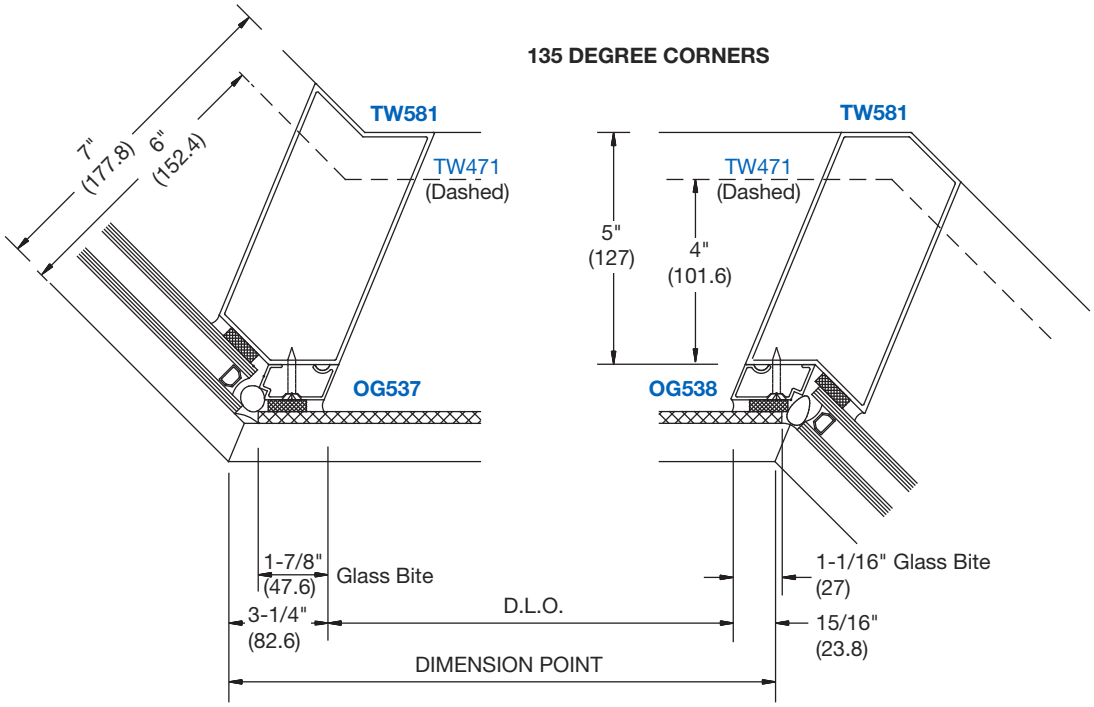

NOT TO SCALE

CURTAIN WALLS

Typical Details

Thermally Isolated
- **Series 4500**
- **Series 4500SG**

MID-SPAN ANCHORS AND MULLION SPLICE

NOTE: Series 4500 Details Shown;
Series 4500SG Similar.

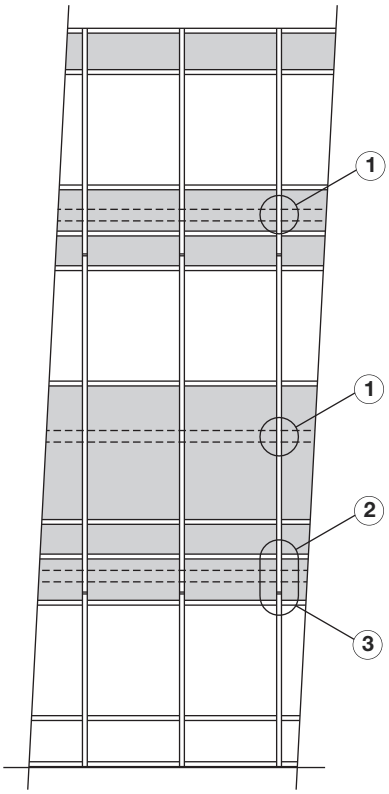

TYPICAL ELEVATION

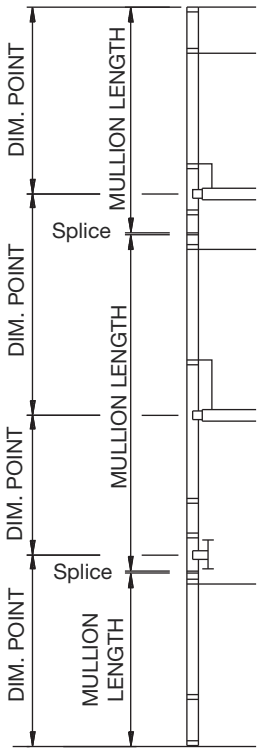

SECTION DETAIL

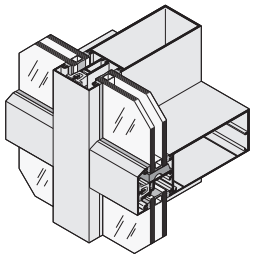

SERIES 4500
Captured Vertical
Glazed Curtain Wall

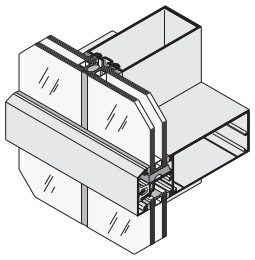

SERIES 4500SG
Structural Silicone Vertical
Glazed Curtain Wall

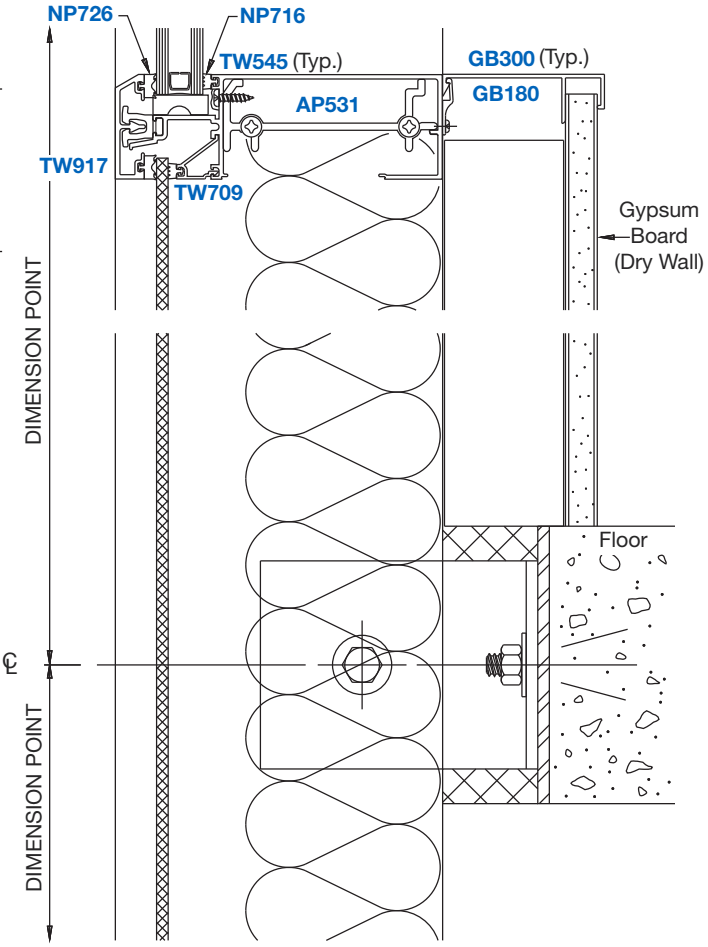

1

FIXED ANCHOR
(DEADLOAD ANCHOR)

NOTE: Anchor Type
and Size Varies Per
Job Requirements

NOT TO SCALE

CURTAIN WALLS

Typical Details

Thermally Isolated
- Series 4500
- Series 4500SG

MID-SPAN ANCHORS AND MULLION SPLICE

NOTE: Series 4500 Details Shown; Series 4500SG Similar.

2

EXPANSION ANCHOR (WINDLOAD ANCHOR)

NOTE: Anchor Type and Size Varies Per Job Requirements

3

SPLICE JOINT

NOTE: Joint Width Should be Based on Mullion Length and Temperature Differential. A 1/2" (12.7) Gap Allows for 1/4" (6.4) Movement.

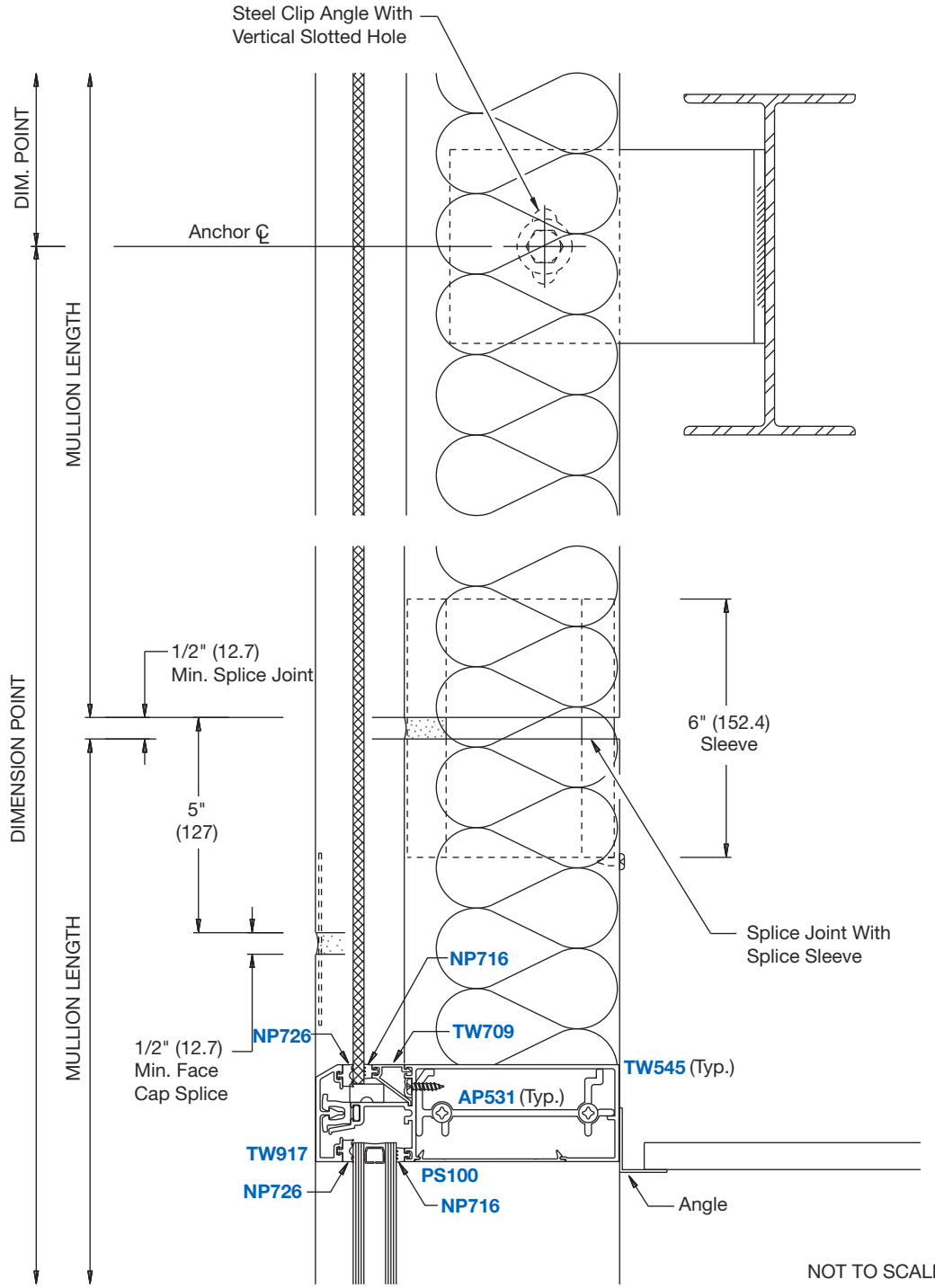

NOT TO SCALE

CURTAIN WALLS

Windload Charts

Thermally Isolated • Series 4500

CAPTURED VERTICAL MULLIONS FOR 1" (25) GLAZING

Limitation of vertical mullions for:
CURVES **A** = 15 PSF (718 Pa)
CURVES **B** = 20 PSF (957 Pa)
CURVES **C** = 25 PSF (1197 Pa)
CURVES **D** = 30 PSF (1436 Pa)

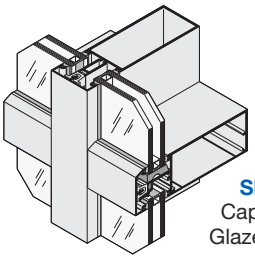

SERIES 4500
Captured Vertical Glazed Curtain Wall

SHEAR BLOCK ASSEMBLY

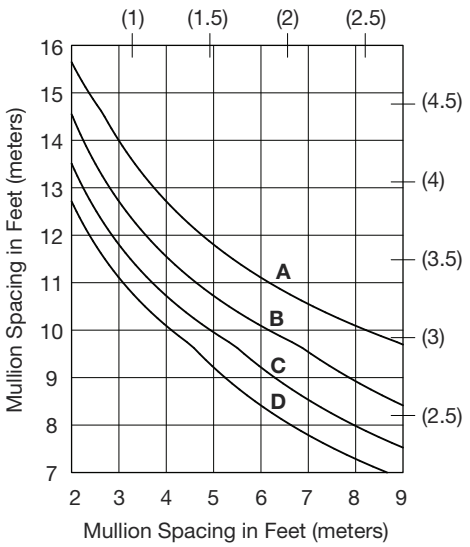

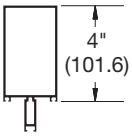

TW441

TW441
I = 4.046
(168.41 x 10^4)
S = 1.490
(24.42 x 10^3)

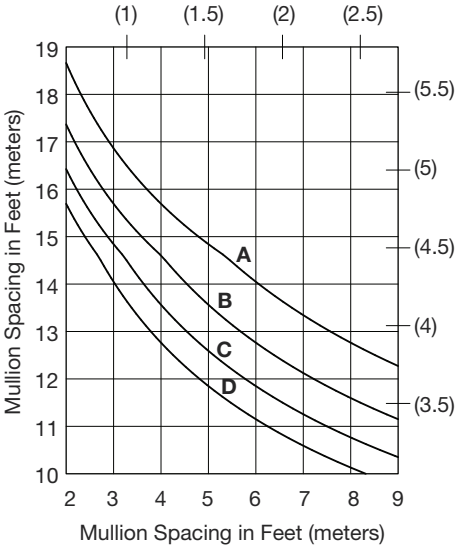

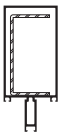

TW441
With **SS401**

SS401
Steel Stiffener
I = 1.428
(59.44 x 10^4)
S = 0.846
(13.86 x 10^3)

IAL+STL = 8.187
(340.77 x 10^4)

PANEL ASSEMBLY

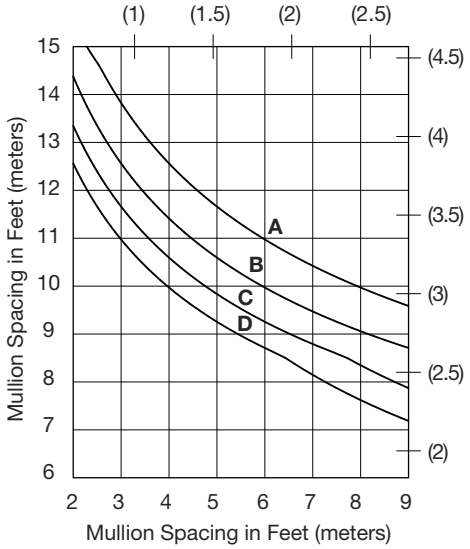

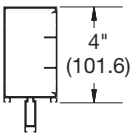

TW501/TW504

TW501/TW504
I = 3.902
(162.41 x 10^4)
S = 1.394
(22.85 x 10^3)

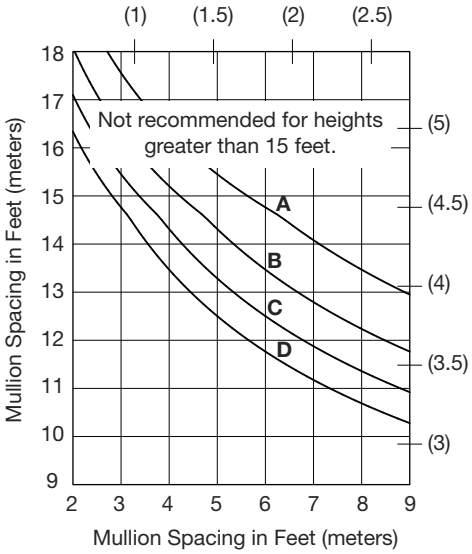

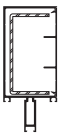

TW501/TW504
With **SS401**

SS401
Steel Stiffener
I = 1.428
(59.44 x 10^4)
S = 0.846
(13.86 x 10^3)

IAL+STL = 8.043
(334.78 x 10^4)

Mullions designed for L/175 deflection ratio and for the following allowable working stresses:
-Aluminum alloy 6063-T6: allowable stress for windload 12,929 psi. (89 MPa)
-Steel reinforcing allowable stress for windload 26,666 psi. (183 MPa)
Curves represent the limit values and are based on criteria for simple beam, uniformly loaded, using the distribution of wind forces on the wall with rectangular loading. Glass is not considered as contributing to resistance of deflection.

CURTAIN WALLS

Windload Charts

Thermally Isolated • Series 4500

CAPTURED VERTICAL MULLIONS FOR 1" (25) GLAZING

Limitation of vertical mullions for:
CURVES **A** = 15 PSF (718 Pa)
CURVES **B** = 20 PSF (957 Pa)
CURVES **C** = 25 PSF (1197 Pa)
CURVES **D** = 30 PSF (1436 Pa)

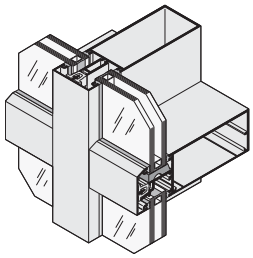

SERIES 4500
Captured Vertical
Glazed Curtain Wall

SHEAR BLOCK ASSEMBLY

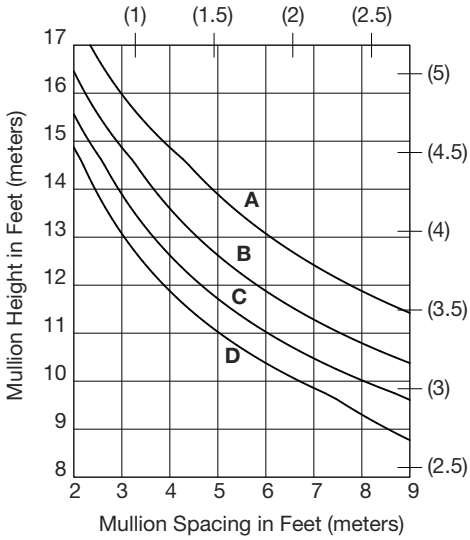

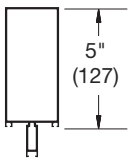

TW541

TW541
I = 6.599
(274.67 x 10^4)
S = 2.077
(34.04 x 10^3)

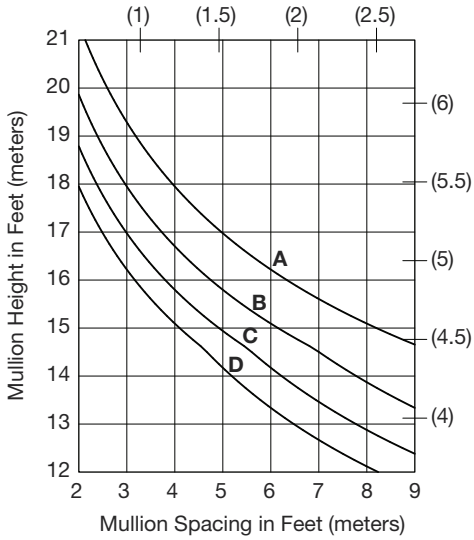

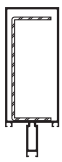

TW541
With **SS501**

SS501
Steel Stiffener
I = 2.556
(106.39 x 10^4)
S = 1.186
(19.44 x 10^3)

I_{AL+STL} = 14.011
(583.18 x 10^4)

PANEL ASSEMBLY/HEAVY WALL MULLIONS

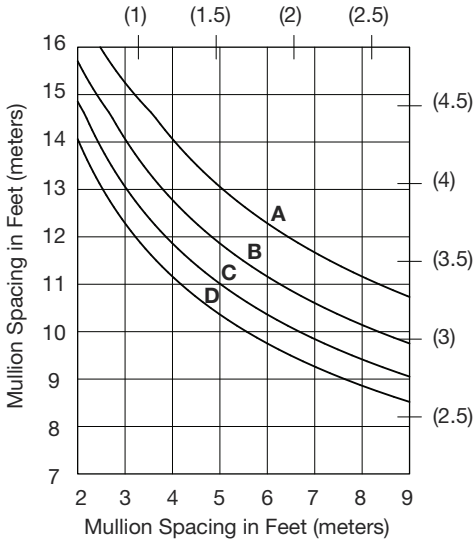

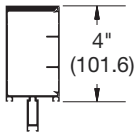

TW502/TW504

TW502/TW504
I = 5.476
(227.93 x 10^4)
S = 2.034
(33.33 x 10^3)

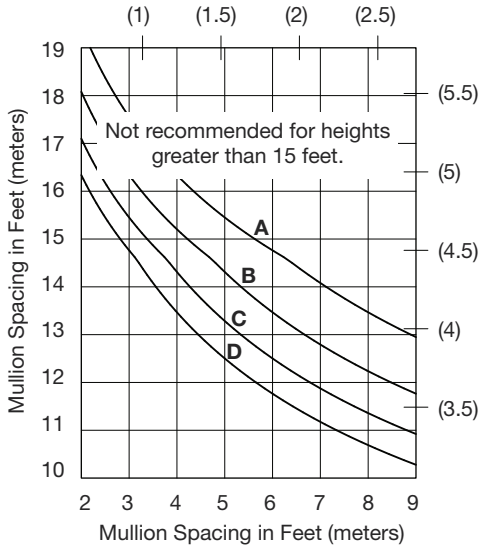

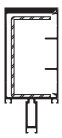

TW502/TW504
With **SS401**

SS401
Steel Stiffener
I = 1.428
(59.44 x 10^4)
S = 0.846
(13.86 x 10^3)

IAL+STL = 9.617
(400.29 x 10^4)

CURTAIN WALLS

Windload Charts

Thermally Isolated • Series 4500

CAPTURED VERTICAL MULLIONS FOR 1" (25) GLAZING

Limitation of vertical mullions for:
CURVES **A** = 15 PSF (718 Pa)
CURVES **B** = 20 PSF (957 Pa)
CURVES **C** = 25 PSF (1197 Pa)
CURVES **D** = 30 PSF (1436 Pa)

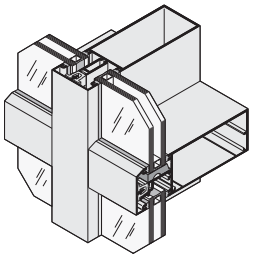

SERIES 4500
Captured Vertical
Glazed Curtain Wall

PANEL ASSEMBLY

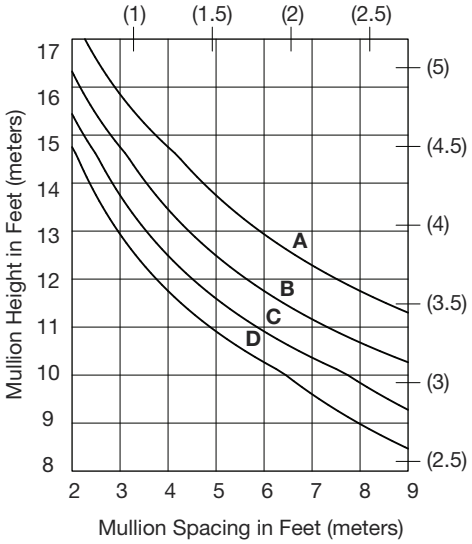

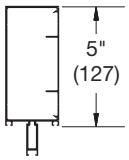

TW701/TW704

TW701/TW704
I = 6.932
(288.53 x 10^4)
S = 1.936
(31.73 x 10^3)

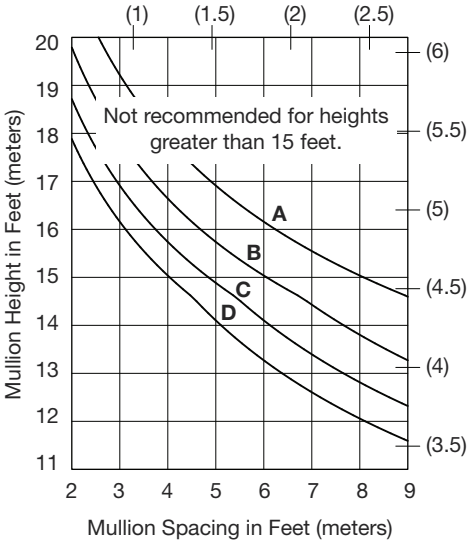

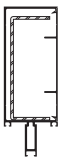

TW701/TW704
With **SS501**

SS501
Steel Stiffener
I = 2.556
(106.39 x 10^4)
S = 1.186
(19.44 x 10^3)

I_{AL+STL} = 13.804
(574.57 x 10^4)

PANEL ASSEMBLY/HEAVY WALL

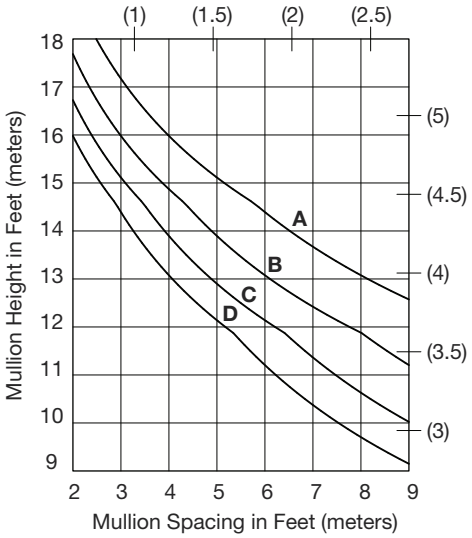

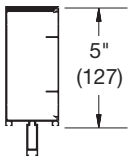

TW702/TW704

TW702/TW704
I = 8.804
(366.45 x 10^4)
S = 2.460
(40.32 x 10^3)

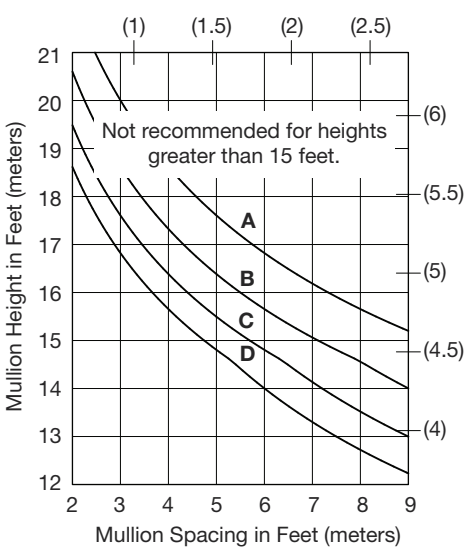

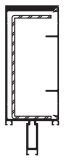

TW702/TW704
With **SS501**

SS501
Steel Stiffener
I = 2.556
(106.39 x 10^4)
S = 1.186
(19.44 x 10^3)

I_{AL+STL} = 16.216
(674.96 x 10^4)

CURTAIN WALLS

Windload Charts

Thermally Isolated • Series 4500

CAPTURED HIGH PERFORMANCE VERTICAL MULLIONS FOR 1" (25) GLAZING

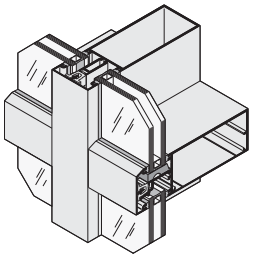

SERIES 4500
Captured Vertical
Glazed Curtain Wall

Limitation of vertical mullions for:
CURVES **A** = 15 PSF (718 Pa)
CURVES **B** = 20 PSF (957 Pa)
CURVES **C** = 25 PSF (1197 Pa)
CURVES **D** = 30 PSF (1436 Pa)

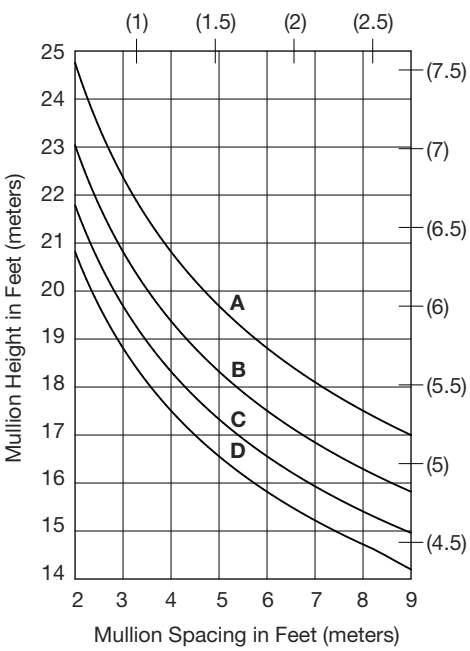

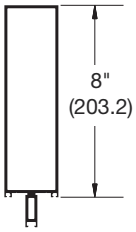

TW841

TW841
I = 25.360
(1055.57 x 10^4)
S = 5.481
(89.83 x 10^3)

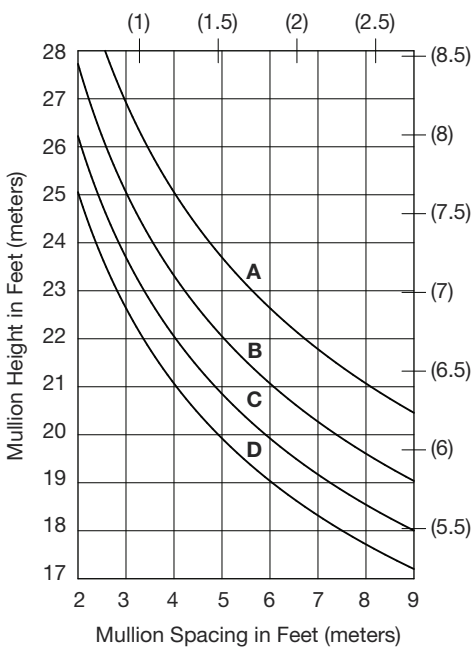

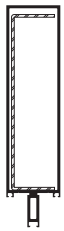

TW841
With **SS801**

SS801
Steel Stiffener
I = 9.598
(399.50 x 10^4)
S = 2.625
(43.02 x 10^3)

I_{AL+STL} = 53.194
(2214.11 x 10^4)

Project: Kaiser Permanente, Downey, CA

CURTAIN WALLS

Windload Charts

Thermally Isolated • Series 4500SG

STRUCTURAL SILICONE GLAZED VERTICAL MULLIONS FOR 1" (25) GLAZING

Limitation of vertical mullions for:
CURVES **A** = 15 PSF (718 Pa)
CURVES **B** = 20 PSF (957 Pa)
CURVES **C** = 25 PSF (1197 Pa)
CURVES **D** = 30 PSF (1436 Pa)

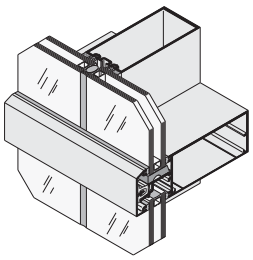

SERIES 4500SG
Structural Silicone Vertical Glazed Curtain Wall

SHEAR BLOCK ASSEMBLY

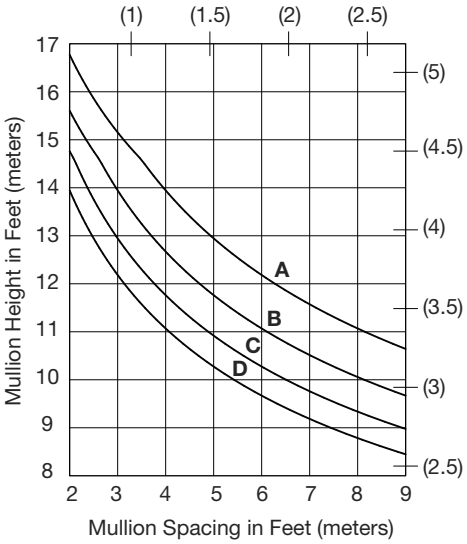

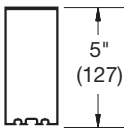

TW550

TW550
I = 5.339
(222.23 x 10^4)
S = 2.149
(35.22 x 10^3)

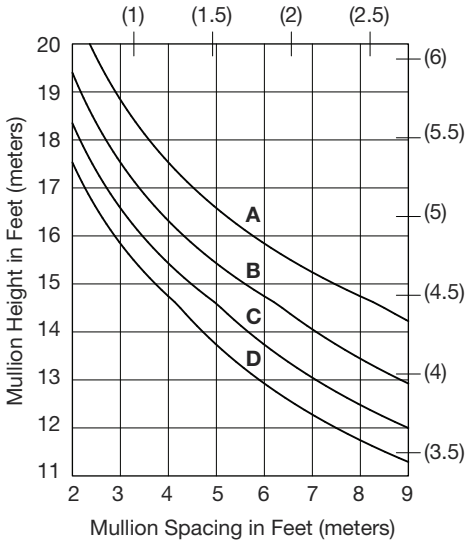

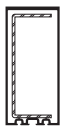

TW550
With **SS501**

SS501
Steel Stiffener
I = 2.556
(106.39 x 10^4)
S = 1.186
(19.44 x 10^3)

I_{AL+STL} = 12.751
(530.74 x 10^4)

PANEL ASSEMBLY/HEAVY WALL

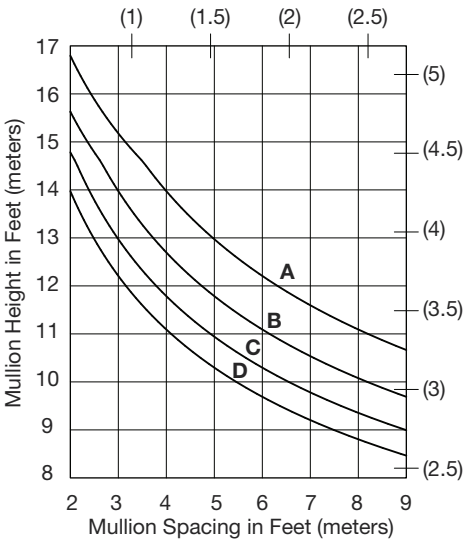

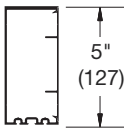

TW715/TW704

TW715/TW704
I = 5.372
(233.60 x 10^4)
S = 2.174
(35.63 x 10^3)

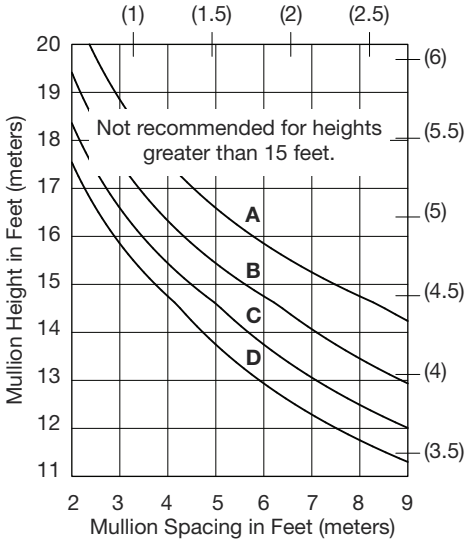

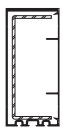

TW715/TW704
With **SS501**

SS501
Steel Stiffener
I = 2.556
(106.39 x 10^4)
S = 1.186
(19.44 x 10^3)

I_{AL+STL} = 12.784
(532.11 x 10^4)

CURTAIN WALLS

Windload Charts

Thermally Isolated • Series 4500SG

STRUCTURAL SILICONE GLAZED VERTICAL MULLIONS FOR 1" (25) GLAZING

Limitation of vertical mullions for:
CURVES **A** = 15 PSF (718 Pa)
CURVES **B** = 20 PSF (957 Pa)
CURVES **C** = 25 PSF (1197 Pa)
CURVES **D** = 30 PSF (1436 Pa)

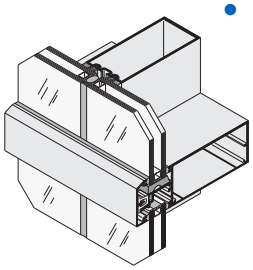

SERIES 4500SG
Structural Silicone Vertical Glazed Curtain Wall

SHEAR BLOCK ASSEMBLY

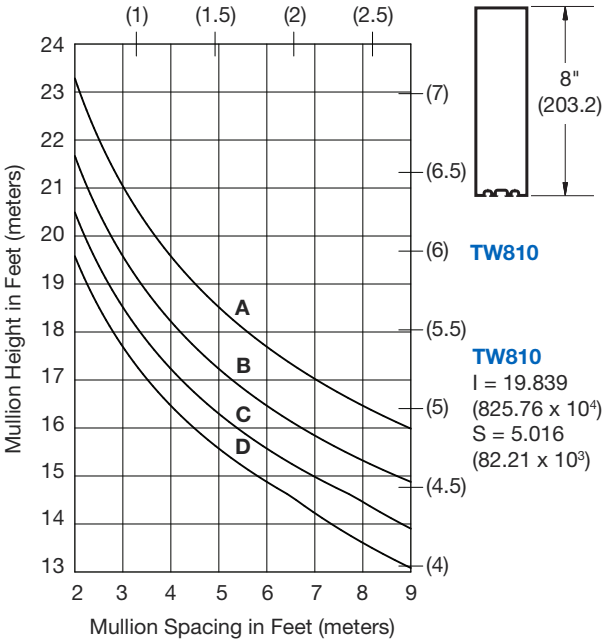

TW810

TW810
I = 19.839
(825.76 x 10^4)
S = 5.016
(82.21 x 10^3)

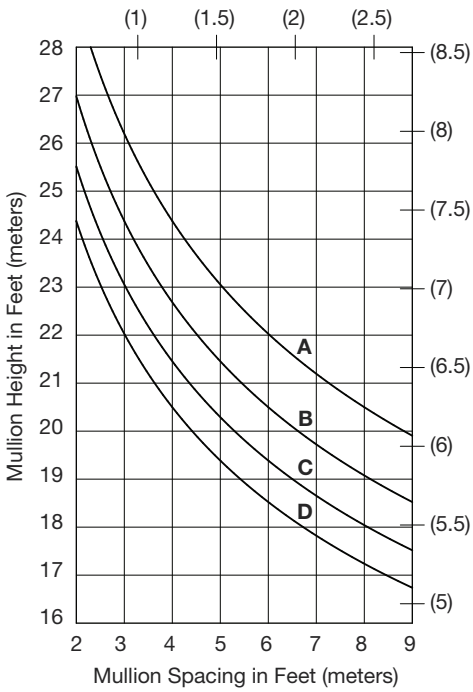

TW810
With **SS801**

SS801
Steel Stiffener
I = 9.598
(399.50 x 10^4)
S = 2.625
(43.02 x 10^3)

I_{AL+STL} = 47.673
(1984.31 x 10^4)

PANEL ASSEMBLY/HEAVY WALL

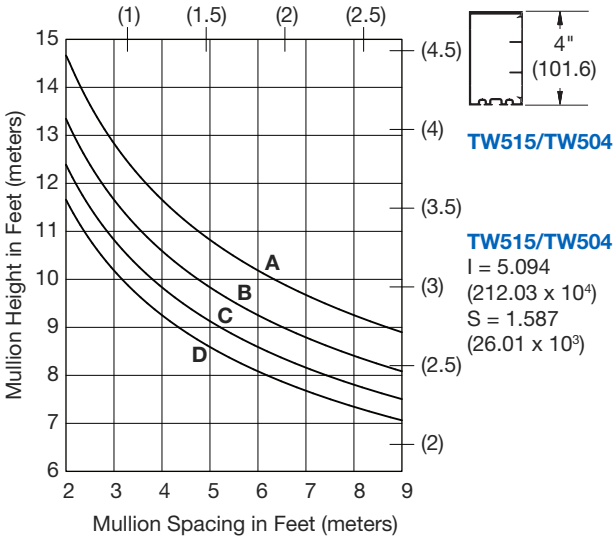

TW515/TW504

TW515/TW504
I = 5.094
(212.03 x 10^4)
S = 1.587
(26.01 x 10^3)

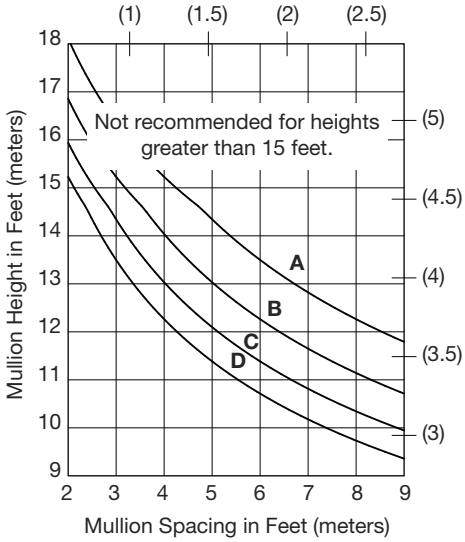

TW515/TW504
With **SS401**

SS401
Steel Stiffener
I = 1.428
(59.44 x 10^4)
S = 0.846
(13.86 x 10^3)

I_{AL+STL} = 7.261
(302.23 x 10^4)

CURTAIN WALLS

Deadload Charts

Thermally Isolated
- **Series 4500**
- **Series 4500SG**

HORIZONTAL MULLIONS FOR 1" (25) GLAZING

Deadload charts are based on 1/8" (3.2) maximum allowable deflection at the center point of the horizontal member and on a glass weight of 6.5 psf (31.74 Kg/m²) for 1" (25) glass.
Glass shall rest on two setting blocks located at: CURVES **A**: 1/4 points
CURVES **B**: 1/8 points or 8" (203.2) from corners, whichever is larger

SHEAR BLOCK ASSEMBLY

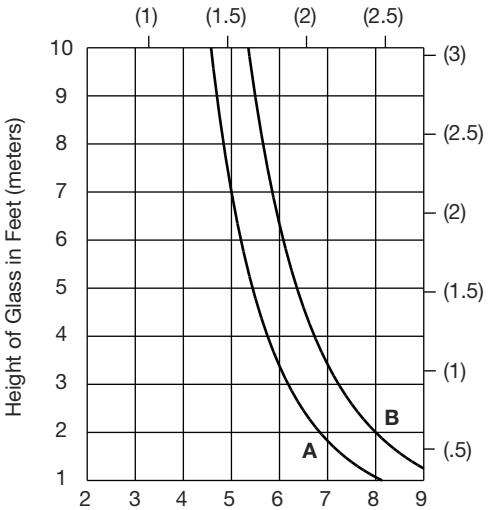

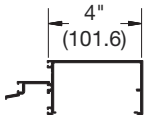

TW445
I_{yy} = .567
(23.43 x 10⁴)

PANEL ASSEMBLY

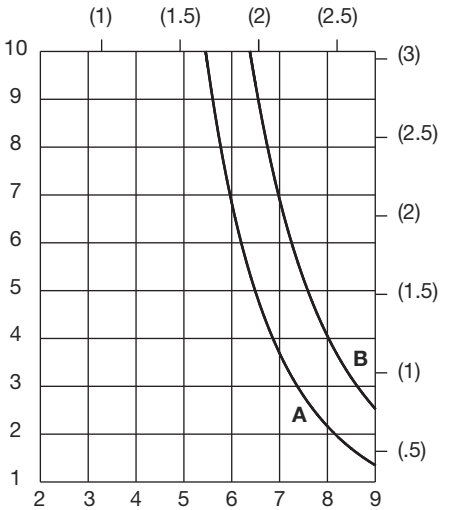

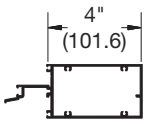

TW428
I_{yy} = 1.148
(47.78 x 10⁴)

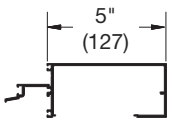

TW545
I_{yy} = .803
(25.43 x 10⁴)

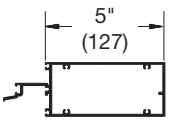

TW528
I_{yy} = 1.366
(56.86 x 10⁴)

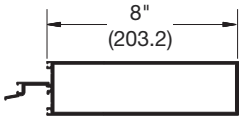

TW828
I_{yy} = 2.448
(101.89 x 10⁴)

SHEAR BLOCK ASSEMBLY

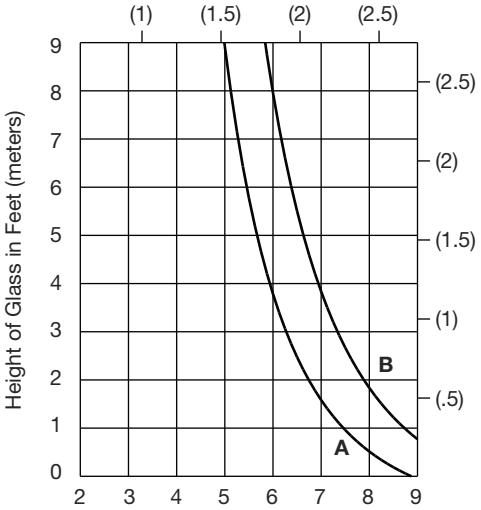

PANEL ASSEMBLY

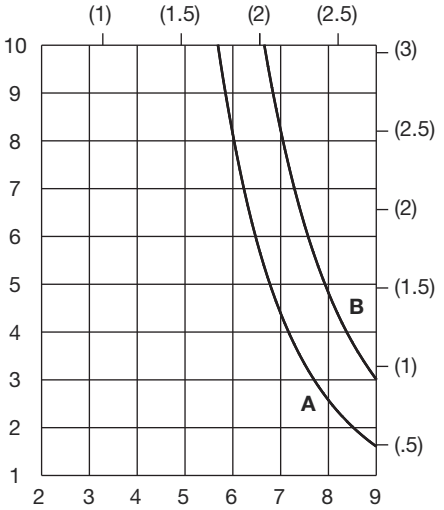

SHEAR BLOCK ASSEMBLY

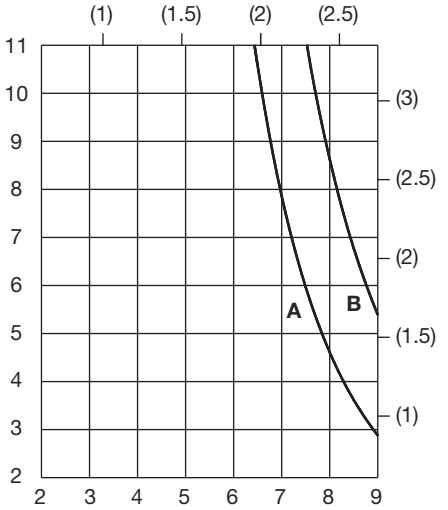

Mullion Span in Feet (meters)

CRL U.S. ALUMINUM

CURTAIN WALLS

Accessories

Thermally Isolated
- Series 4500
- Series 4500SG

FOR 1/4" (6) AND 1" (25) GLAZING

PART NO.	DETAIL	DESCRIPTION	PKG. QTY.	FOR MULLION DEPTHS		
				4" (101.6)	5" (127)	8" (203.2)
AP514	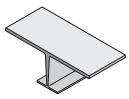	Intermediate Vertical Anchor for TW441	12	●		
AP513	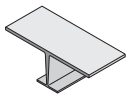	Intermediate Vertical Anchor for TW410	12	●		
AP707	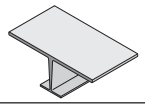	Intermediate Vertical Anchor for TW541	12		●	
AP712	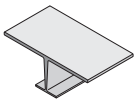	Intermediate Vertical Anchor for TW550	12		●	
AP812	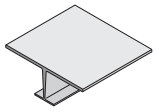	Intermediate Vertical Anchor for TW810	12			●
AP604	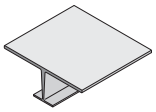	Intermediate Vertical Anchor for TW841	12			●
AP516	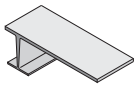	Wall Jamb Anchor for TW441 and TW416	4	●		
AP511	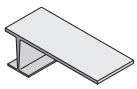	Wall Jamb Anchor for TW410	4	●		
AP634	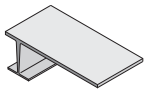	Wall Jamb Anchor for TW516 and TW541	4		●	
AP711	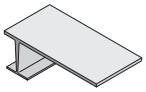	Wall Jamb Anchor for TW550	4		●	
AP811	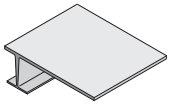	Wall Jamb Anchor for TW810	4			●
AP607	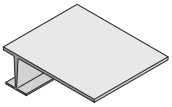	Wall Jamb Anchor for TW841	4			●
AP626	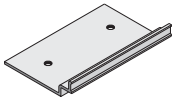	Optional Perimeter Anchor for all Jamb Mullions	12	●	●	●

CURTAIN WALLS

Accessories

FOR 1/4" (6) AND 1" (25) GLAZING

Thermally Isolated
- Series 4500
- Series 4500SG

PART NO.	DETAIL	DESCRIPTION	PKG. QTY.	FOR MULLION DEPTHS		
				4" (101.6)	5" (127)	8" (203.2)
SL511		Mullion Splice Sleeve for TW441	12	●		
SL710		Mullion Splice Sleeve for TW541	12		●	
SL512		Mullion Splice Sleeve for TW410	12	●		
SL711		Mullion Splice Sleeve for TW550	12		●	
SL811	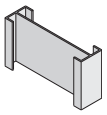	Mullion Splice Sleeve for TW841 and TW810	12			●
SL572	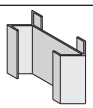	Mullion Splice Sleeve for TW470	12	●		
SL772	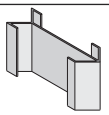	Mullion Splice Sleeve for TW580	5		●	
SL823		Mullion Splice Sleeve for TW823	5	●		
SL521		Mullion Splice Sleeve for TW420	5	●		
SL721	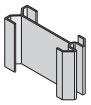	Mullion Splice Sleeve for TW560	5		●	
SL573		Mullion Splice Sleeve for TW471	5	●		
SL773	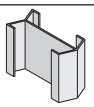	Mullion Splice Sleeve for TW581	5		●	
AP890	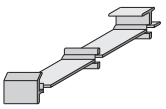	Shear Block for 90 Degree Corners (Includes One Left Block, One Right Block, and Screws)	1 Set			●

CRL U.S. ALUMINUM

CURTAIN WALLS

Accessories

Thermally Isolated
- Series 4500
- Series 4500SG

FOR 1/4" (6) AND 1" (25) GLAZING

PART NO.	DETAIL	DESCRIPTION	PKG. QTY.	FOR MULLION DEPTHS		
				4" (101.6)	5" (127)	8" (203.2)
AP569	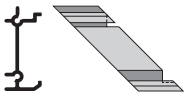	Shear Block for Inside 90 Degree Corners (Includes One Left Block, One Right Block, and Screws)	1 Set	●		
AP568	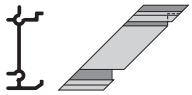	Shear Block for Outside 90 Degree Corners (Includes One Left Block, One Right Block, and Screws)	1 Set	●		
AP528	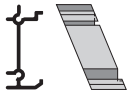	Shear Block for Inside 135 Degree Corners (Includes One Left Block, One Right Block, and Screws)	1 Set	●		
AP524	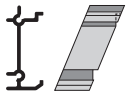	Shear Block for Outside 135 Degree Corners (Includes One Left Block, One Right Block, and Screws)	1 Set	●		
AP709	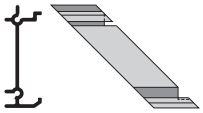	Shear Block for Inside 90 Degree Corners (Includes One Left Block, One Right Block, and Screws)	1 Set		●	
AP708	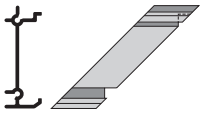	Shear Block for Outside 90 Degree Corners (Includes One Left Block, One Right Block, and Screws)	1 Set		●	
AP727	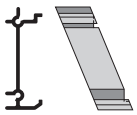	Shear Block for Inside 135 Degree Corners (Includes One Left Block, One Right Block, and Screws)	1 Set		●	
AP726	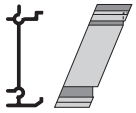	Shear Block for Outside 135 Degree Corners (Includes One Left Block, One Right Block, and Screws)	1 Set		●	
DJ751	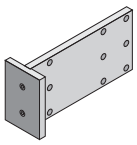	Drill Jig for Screw Spline Assembly	1	●	●	●
DJ750	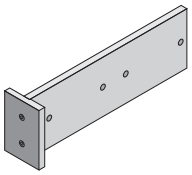	Drill Jig for Shear Block Assembly	1	●	●	●

CURTAIN WALLS

Accessories

FOR 1/4" (6) AND 1" (25) GLAZING

Thermally Isolated
- Series 4500
- Series 4500SG

PART NO.	DETAIL	DESCRIPTION	PKG. QTY.	FOR MULLION DEPTHS		
				4" (101.6)	5" (127)	8" (203.2)
SL506	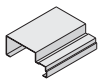	Vertical Wall Jamb Splice Sleeve for TW416	5	●		
SL706	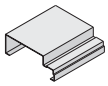	Vertical Wall Jamb Splice Sleeve for TW516	5		●	
SL834	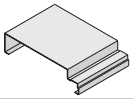	Vertical Wall Jamb Splice Sleeve for TW816	5			●
SL712		Vertical Face Cap Splice Sleeve for TW912	5	●	●	●
SL717		Horizontal Face Cap Splice Sleeve for TW917	5	●	●	●
SL618		Vertical Corner Face Cap Splice Sleeve for TW818	5	●	●	●
WD719		Water Deflector Outside 90 Degree Corners	10	●	●	●
WD524	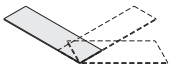	Water Deflector 135 Degree Corners	8	●	●	●
AP431	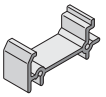	Shear Block for 4" (101.6) Members (Includes Screws)	20	●		
AP531	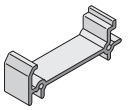	Shear Block for 5" (127) Members (Includes Screws)	20		●	
AP830	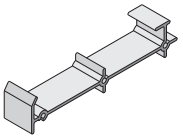	Shear Block for 8" (203.2) Head and Sill (Includes Screws)	20			●
AP854	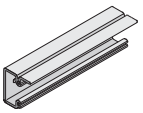	Shear Block for 8" (203.2) Intermediate Horizontals (Includes Screws)	20			●
MS212		Screw for Attaching TW719 to TW420 or TW560 1/4"-20 x 3/4" (19) HWHCS with SRG5	200	●	●	
MS229		Screw for Attaching TW823 to TW560 1/4"-20 x 4-1/2" (114.3) HHCS, Zinc Plated	50			●

CRL U.S. ALUMINUM

CURTAIN WALLS

Accessories

Thermally Isolated
- Series 4500
- Series 4500SG

FOR 1/4" (6) AND 1" (25) GLAZING

PART NO.	DETAIL	DESCRIPTION	PKG. QTY.	FOR MULLION DEPTHS		
				4" (101.6)	5" (127)	8" (203.2)
NC900		Face Cap Retainer Clip	200	●	●	●
RG700	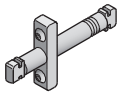	Temporary Glass Retainer for Butt Glaze Patent No. D295,952	50	●	●	●
WD710		End Dam for Intermediate Horizontals	50	●	●	●
WD711	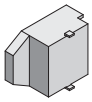	End Dam for Sill	50	●	●	●
WD704	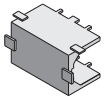	Water Diverter for Butt Glaze Sill	50	●	●	●
WD705	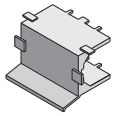	Water Diverter for Butt Glaze Head	50	●	●	●
WD703	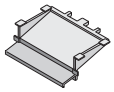	Water Diverter for Butt Glaze Horizontal	50	●	●	●
CP700	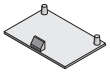	Closure Plate for Wall Jamb	30	●	●	●
AP778	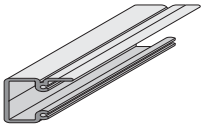	Shear Block for Head and Sill at 90 Degree Corners (Includes One Left Block, One Right Block, and Screws)	1 Set			●
ST251		Screw for Screw Spline Assembly #10 x 1" (25) HWH SMS	200	●	●	●
ST269		Screw for Shear Block Assembly #12 x 2" (51) PHL, PH, SMS, Zinc Plated	100	●	●	●
ST217		Screw for Attaching TW719 to TW823 1/4" x 2" (51) HWH, TEK, Zinc Plated	200	●	●	●

CURTAIN WALLS

Accessories

Thermally Isolated
- **Series 4500**
- **Series 4500SG**

FOR 1/4" (6) AND 1" (25) GLAZING

PART NO.	DETAIL	DESCRIPTION	PKG. QTY.	FOR MULLION DEPTHS		
				4" (101.6)	5" (127)	8" (203.2)
NP716		Interior Gasket	500' Roll	●	●	●
NP726	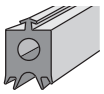	Exterior Gasket	250' Roll	●	●	●
SP450		Spacer Gasket for Butt Glaze	250' Roll	●	●	●
GT425	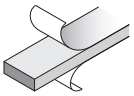	Spacer Tape for Butt Glaze Corners 1/4" (6) x 3/4" (19)	50' Roll	●	●	●
WB701	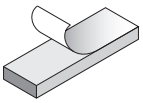	Edge Block 1-1/4" (32) x 5/16" (8) x 4" (101.6)	50	●	●	●
SB710	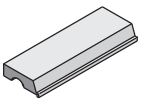	Setting Block 4" (101.6) Long	100	●	●	●
SS401	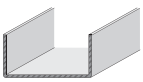	Steel Stiffener for Use With 4" (101.6) Back Members. ASTM A-559	16' (4.88 m) Stock Length	●		
SS501	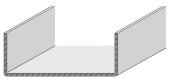	Steel Stiffener for Use With 5" (127) Back Members. ASTM A-559	16' (4.88 m) Stock Length		●	
SS801		Steel Stiffener for Use With 8" (203.2) Back Members. ASTM A-559	16' (4.88 m) Stock Length			●

K

SUN CONTROL SYSTEMS

- Series 3600
- Series CRL7700
- Series CRL7750
- Custom Sunshades
- Sun Control Panels
- Interior Light Shelves
- Vertical Screen Systems
- Aluminum Trellis Systems
- Canopies
- Glass Awnings

Toll Free Phone Service
(800) 262-5151
Ext. 5305

Toll Free Fax Service
(866) 262-3299
U.S. and Canada

CRL®
U.S. ALUMINUM

usalum.com

K SUN CONTROL SYSTEMS

CRL U.S. ALUMINUM

Richland College Garland Campus
Garland, TX

An element of sophistication and modern design, U.S. Aluminum Sunshades and Canopies can transform an indistinct building into a space of beauty and expression. Each system is built to specifications in our Los Angeles facility under strict standards that have earned us many prestigious awards for manufacturing excellence. Our engineers will work with you to create an elegant and functional Sunshade or Canopy System that is sure to impress.

U.S. Aluminum Sunshades and Canopies can be custom modified to the specific requirements of your project. Our product specialists will work with you to ensure the Sun Control System you order from us will meet your needs and the approval of your clients.

For a complete Glossary of Common Terms see pages 62-P1 thru 68-P1.

SYSTEM — PAGES

- **Product Overview** ..... 02-K1 and 03-K1
- **Series 3600** ..... 04-K1 and 05-K1
- **Series CRL7700** ..... 06-K1 and 07-K1
- **Series CRL7750** ..... 08-K1 and 09-K1
- **Custom Sunshades** ..... 10-K1 thru 18-K1
- **Sun Control Panels** 19-K1
- **Interior Light Shelves** ..... 20-K1 and 21-K1
- **Vertical Screen Systems** ..... 22-K1 and 23-K1
- **Aluminum Trellis Systems** ..... 24-K1 and 25-K1
- **Aluminum and Steel Canopies** 26-K1
- **Glass Awnings** ..... 27-K1 thru 31-K1
- **Accessories** 32-K1

For information or other assistance, use our toll free phone or fax service numbers from anywhere in the U.S. or Canada

Toll Free Phone (800) 262-5151 Ext. 5305 Toll Free Fax (866) 262-3299

Contact us through our web site at usalum.com

SUN CONTROL SYSTEMS

Table of Contents

Sunshade and Canopy Systems

Section K1

Page

PRODUCT OVERVIEW .....02-K1 and 03-K1
SERIES 3600 SUNSHADES .....04-K1 and 05-K1
SERIES CRL7700 SUNSHADES.....06-K1 and 07-K1
SERIES CRL7750 SUNSHADES.....08-K1 and 09-K1
CUSTOM FABRICATED SUNSHADES .....10-K1 thru 18-K1
ALUMINUM SUN CONTROL PANELS 19-K1
INTERIOR LIGHT SHELF SYSTEMS.....20-K1 and 21-K1
VERTICAL SCREEN SYSTEMS .....22-K1 and 23-K1
TRELLIS SYSTEMS.....24-K1 and 25-K1
ALUMINUM AND STEEL CANOPIES 26-K1
GLASS AWNINGS.....27-K1 thru 31-K1
ACCESSORIES 32-K1

Project: Richland College, Garland, TX

Due to the diversity in state/provincial, local, and federal laws and codes that govern the design and application of architectural products, it is the responsibility of the individual architect, owner, and installer to ensure that products selected for use on projects comply with all applicable building codes and laws. U.S. Aluminum exercises no control over the use or application of its products, glazing materials, and operating hardware, and assumes no responsibility thereof.

The rapidly changing technology within the architectural aluminum products industry demands that U.S. Aluminum reserve the right to revise, discontinue or change any product line, specification or electronic media without prior written notice.

NOTE: Dimensions in parentheses ( ) are millimeters unless otherwise noted.
Other metric units shown in this publication are:

m - meter	Kg - kilogram
Pa - pascal	KPa - kilopascal
MPa - megapascal	

SUN CONTROL SYSTEMS

Product Overview

- **Completely Fabricated Sunshade Systems**
- **Custom Sunshade Component Parts**
- **Aluminum and Steel Canopies**
- **Practical Design for Minimal Field Labor**

An element of sophistication and modern design, CRL Sunshades and Canopies can transform an indistinct building into a space of beauty and expression.

Each system is built to specifications in our Los Angeles facility under strict standards that have earned CRL many prestigious awards for manufacturing excellence. CRL engineers will work with you to create an elegant and functional Sunshade or Canopy System that is sure to impress.

For additional information, contact CRL Architectural and Ornamental Metals Technical Sales at (800) 421-6144 in the U.S., (877) 421-6144 from Canada, or (323) 588-1281 International. Ask for Ext. 7770. You can also e-mail us at **archmetals@crlaurence.com**.

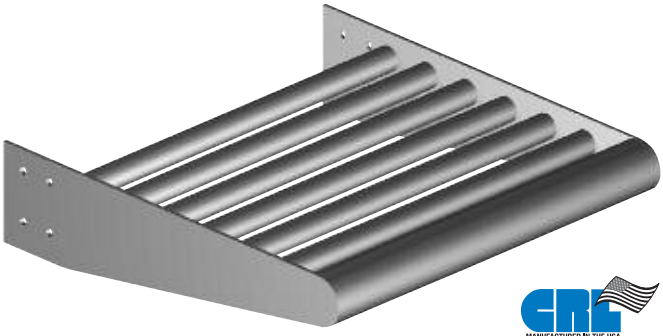

Sunshade and Canopy Systems

SUN CONTROL SYSTEMS

Product Overview

- **Don't Hesitate to Say "Yes" When Your Customer Needs Something Special**
- **With CRL's Rapid Customization You Can Win That Bid for the Next Big Sunshade Project**
- **When Quick Delivery Could Make the Difference Between Winning and Losing a Big Sunshade Job, CRL Will Out-Perform Other Sunshade Suppliers**

The difference between winning and losing a bid for any Sunshade project can often mean more than just the price. It's often a matter of being able to give your customer something special or out of the ordinary. Sometimes it's a matter of the quickest delivery, or delivery across borders, regardless of the price.

We don't want you ever to have to say "No" to a Sunshade job. We can work with you to meet deadlines, or to supply that something special that others can't deliver. We have the capability to meet your requirements so you can say "Yes" to any and all jobs that you have the opportunity to bid on.

You need not be hesitant to get in a 'last minute' bid on a Sunshade job. Fabricating our own systems enables us to respond to custom designs and special conditions and, at the same time, meet your needs for the shortest reasonable lead times. We're experts at making on-time deliveries, whether across town or across oceans.

MANUFACTURED IN THE USA BY C.R. LAURENCE
An ISO9001:2008 Certified Company

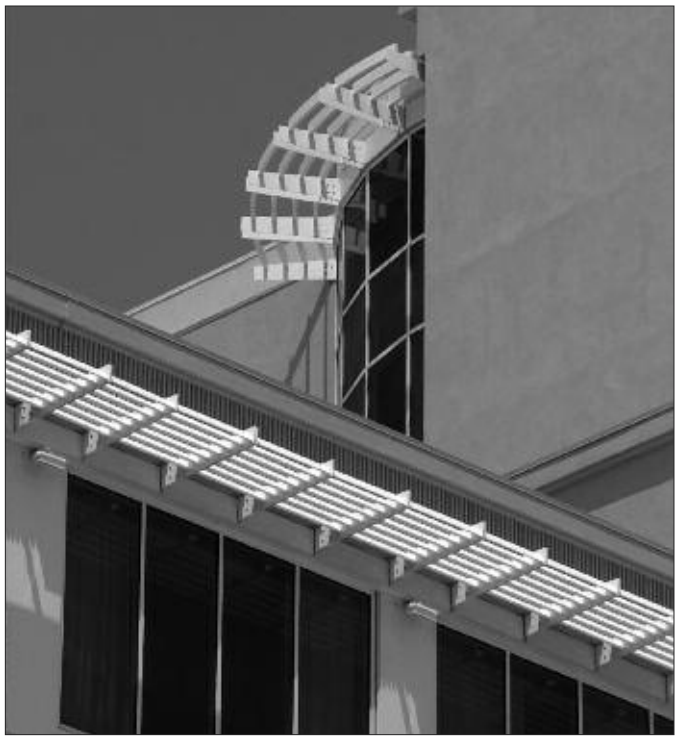

Rapid Customization Service

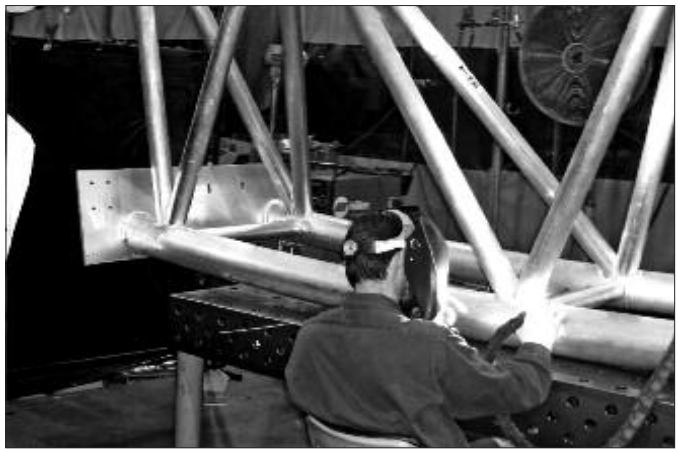

Once We Receive Your Order We Go to Work on it Right Away.

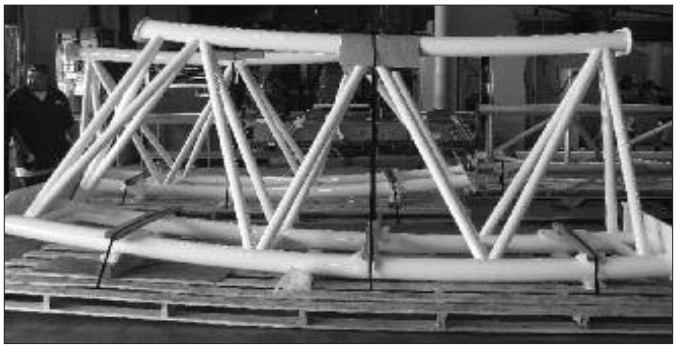

Fabrication, Finishing, and Packaging. All Within Reasonable Lead Times.

Upon Completion We Ship it to Your Job Site Anywhere in the World.

The Result is a Architectural Metal System You'll Be Proud to Install.

SUN CONTROL SYSTEMS

Special Features

Sunshades
- Series 3600

- 30" (762) and 36" (914) Projections Available
- Variety of Louvers and Fascia Profiles to Choose From
- Continuous Fascia Cover
- Screw Spline Assembly
- Retrofit Options for Existing Buildings
- Mounting Brackets for Walls, Curtain Walls, and Storefronts
- Structurally Designed to Meet the Load Values Required on the Project
- Custom Sizes and Shapes Available

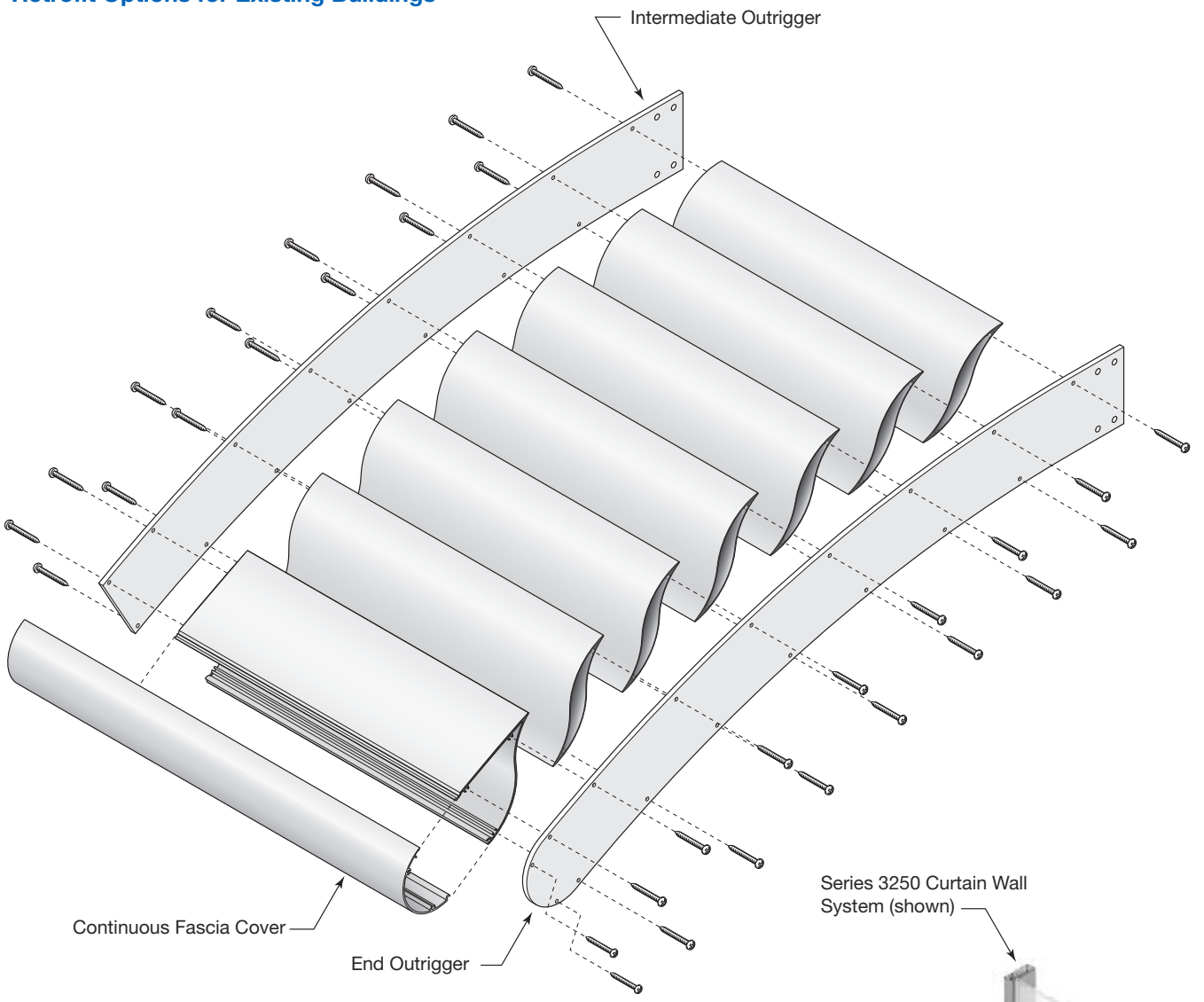

SUN CONTROL SYSTEMS

Typical Details

Sunshades
• Series 3600

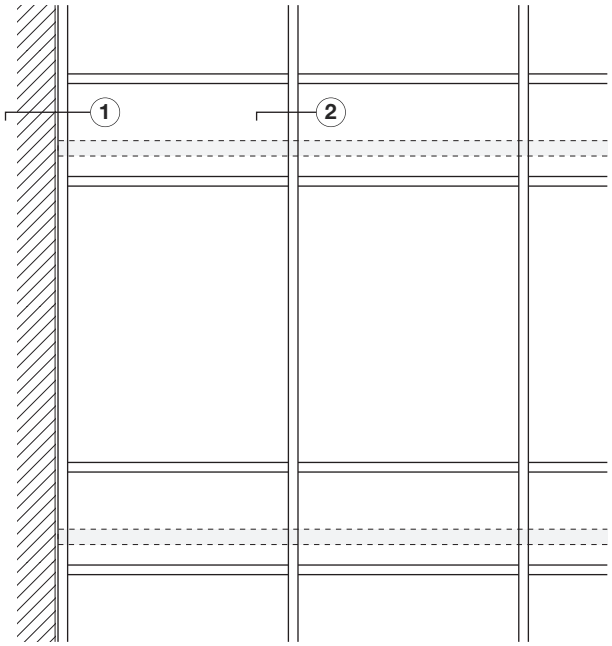

TYPICAL ELEVATION

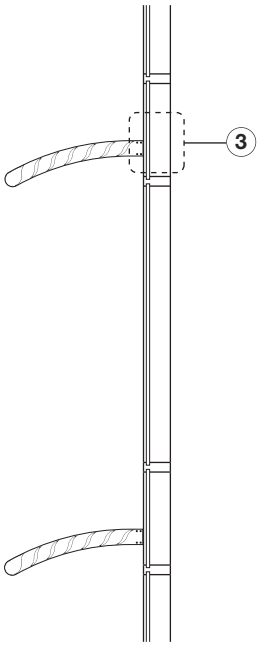

SECTION DETAIL

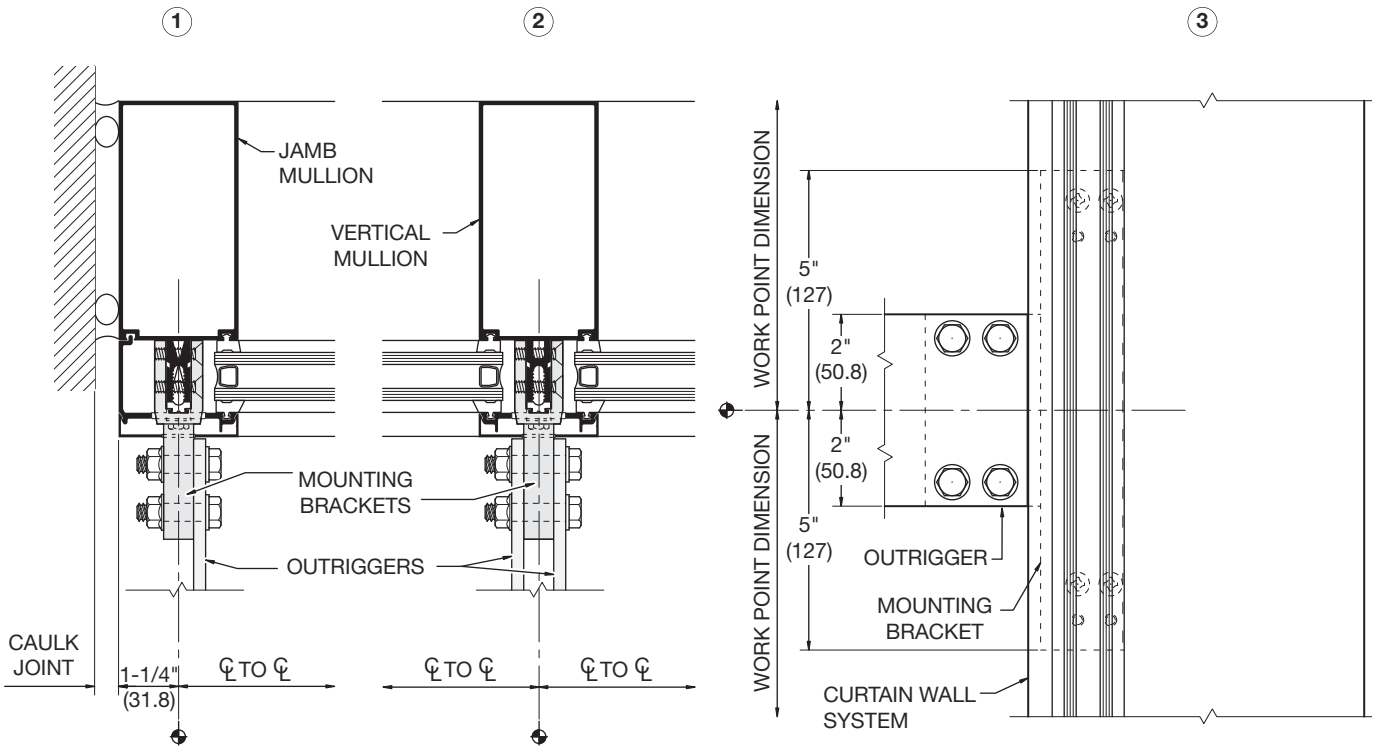

SUN CONTROL SYSTEMS

Special Features

Sunshades
- Series CRL7700

- Welded Systems for Structural Integrity
- Efficient Light Transmission
- Practical Design for Minimal Field Labor
- Three Standard Sizes With Custom Sizes Also Available
- Powder Painted Metallic Silver
- Custom Painted Finishes are Also Available

We offer the CRL7700 Series Aluminum Sunshade in three popular standard sizes to minimize field labor and cut down on expenses. If these three sizes do not work for your design, we will custom manufacture the CRL7700 Series to exactly your specifications in our state-of-the-art manufacturing facility in Los Angeles, California.

All standard size units come powder painted in a metallic silver finish, with the option of custom painted finishes available. Give our Architectural and Ornamental Metals Technical Sales Team a call today to discuss your next Sunshade project at (800) 421-6144 in the U.S., (877) 421-6144 from Canada, or (323) 588-1281 International. Ask for Ext. 7770. You can also email us at **archmetals@crlaurence.com.**

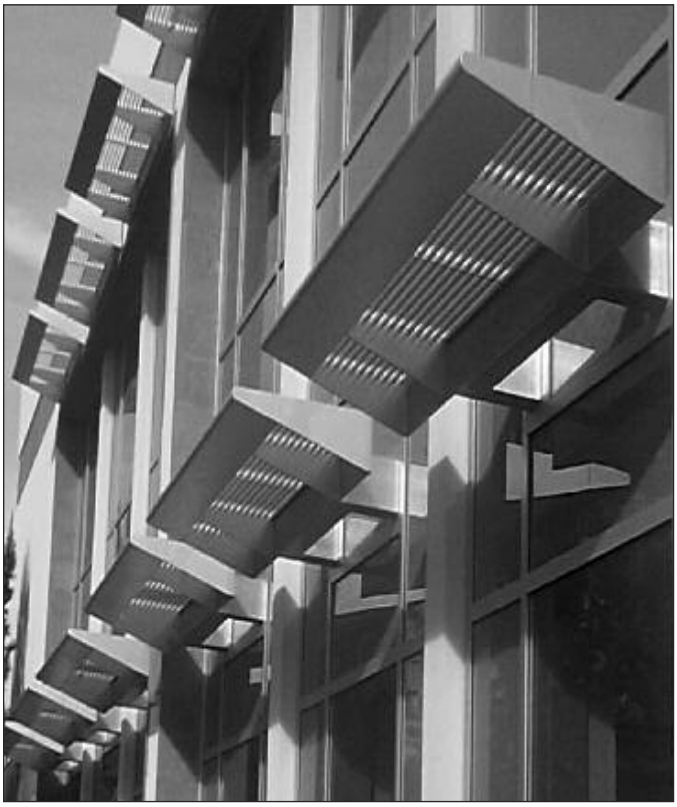

Design and Fabrication Process

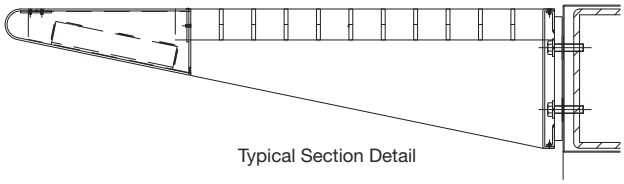

Typical Section Detail

SUN CONTROL SYSTEMS

Options

Sunshades
• Series CRL7700

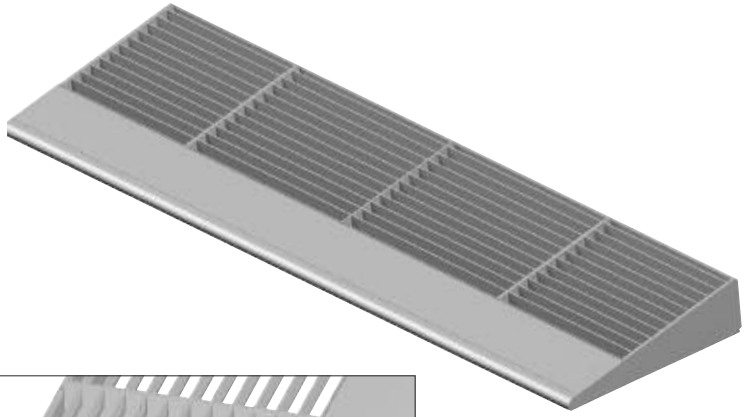

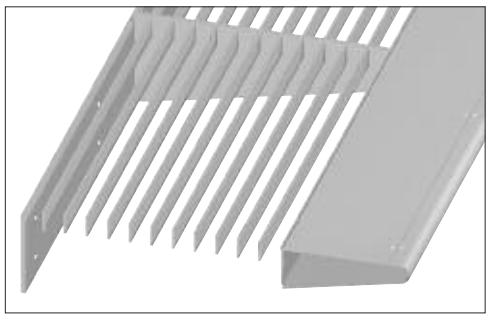

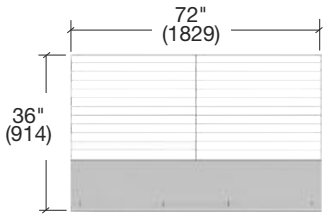

PART NO. 7763

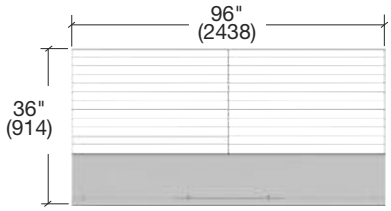

PART NO. 7783

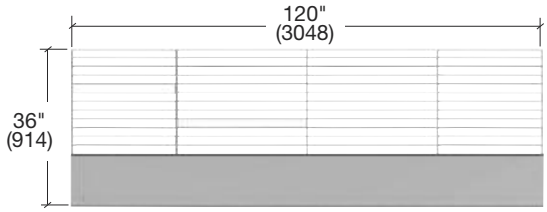

PART NO. 77103

PART NO.	LENGTH#	PROJECTION	FINISH
7763	72" (1829)	36" (914)	Silver Metallic
7783	96" (2438)	36" (914)	Silver Metallic
77103	120" (3048)	36" (914)	Silver Metallic

Minimum order: 1 each. # Must ship common carrier.

SUN CONTROL SYSTEMS

Special Features

Sunshades
• Series CRL7750

- Aluminum and Stainless Steel Construction
- Efficient Light Transmission
- Practical Design for Ease of Installation
- Stock Center, Corner, and End Panels Available
- Four Standard Sizes
- Custom Sizes Available With Stainless Steel Perforated Panels Fabricated to Your Dimensions
- Powder Painted Metallic Silver
- Custom Painted Finishes Available

Efficiently and beautifully styled Series CRL7750 Sunshades lend sophistication and modern design, transforming architecturally ordinary buildings into eye-catching structures.

Each Sunshade System is built to specifications in our Los Angeles facility under strict standards that put CRL at the forefront of manufacturing excellence. One call is all you need to reach CRL Architectural and Ornamental Metals Technical Sales, where product specialists will work with you to create a functional Sunshade System that will meet your customer's needs.

For additional information contact CRL Architectural and Ornamental Metals Technical Sales at (800) 421-6144 in the U.S., (877) 421-6144 from Canada, or (323) 588-1281 International. Ask for Ext. 7770. You can also email us at **archmetals@crlaurence.com**.

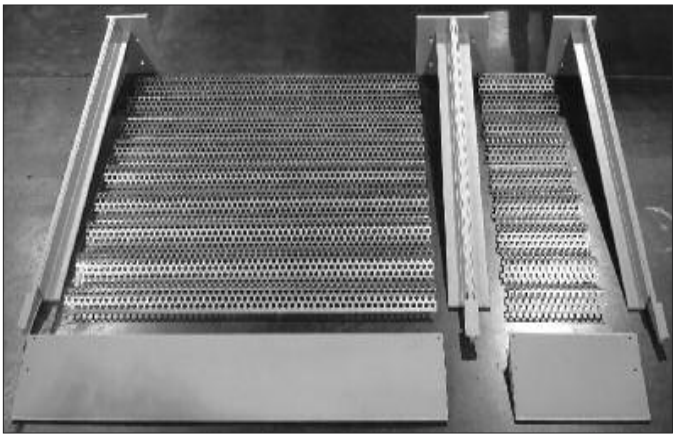

Standard Fabricated Components

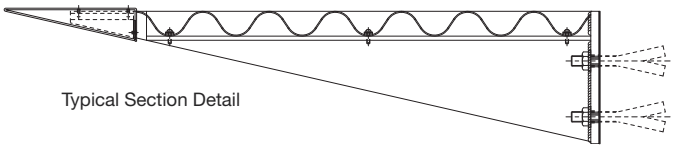

Typical Section Detail

SUN CONTROL SYSTEMS

Options

CENTER PANEL

- **Standard 36" (914) Projection**
- **Powder Painted Metallic Silver**
- **Custom Sizes and Finishes Also Available**

This stock Center Panel unit comes with one each Infill Panel, one each Front Nose Piece, and one each Wall Mount Center Bracket. The projection on all stock units is 36" (914).

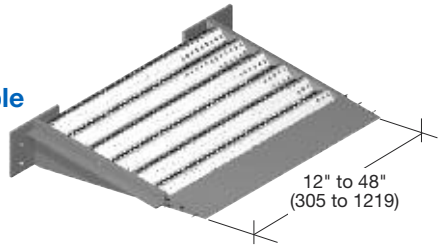

PART NO.	LENGTH	FINISH
AW7750C12	12" (305)	Silver Metallic
AW7750C24	24" (610)	Silver Metallic
AW7750C36	36" (914)	Silver Metallic
AW7750C48	48" (1219)	Silver Metallic

Minimum order: 1 each.

Sunshades

- **Series CRL7750**

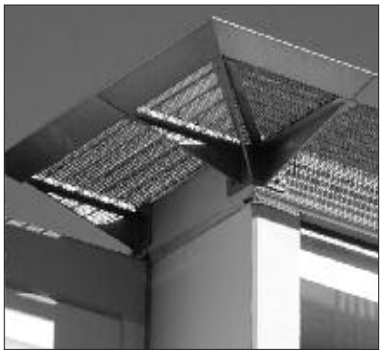

CORNER PANEL

- **Standard 36" (914) Projection**
- **Powder Painted Metallic Silver**
- **Custom Sizes and Finishes Also Available**

This stock 40" long x 36" projection (1016 x 914) Corner Panel unit comes with two each Infill Panels, one each welded 90 degree Front Nose Piece, and one each Wall Mount Center Bracket.

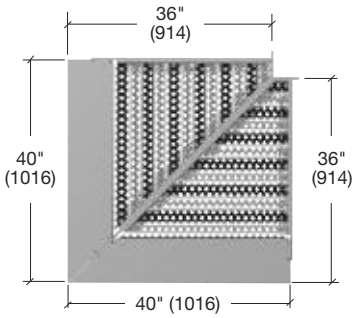

PART NO.	LENGTH	FINISH
AW7750CNR	40" (1016)	Silver Metallic

Minimum order: 1 each.

END PANEL

- **Standard 36" (914) Projection**
- **Left and Right Hand Models**
- **Powder Painted Metallic Silver**
- **Custom Sizes and Finishes Also Available**

This stock End Panel unit comes with one each Infill Panel, one each Front Nose Piece, one each Wall Mount Center, and one each Wall Mount End Bracket. Available in left and right hand models.

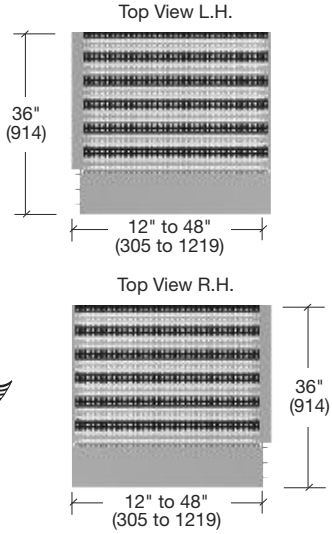

LEFT HAND PART NO.	RIGHT HAND PART NO.	LENGTH	FINISH
AW7750L12	AW7750R12	12" (305)	Silver Metallic
AW7750L24	AW7750R24	24" (610)	Silver Metallic
AW7750L36	AW7750R36	36" (914)	Silver Metallic
AW7750L48	AW7750R48	48" (1219)	Silver Metallic

Minimum order: 1 each.

SUN CONTROL SYSTEMS

Custom Fabricated Sunshades

- **Structurally Designed to Meet the Load Values Required on the Project**
- **Available in Many Proven Designs or Can Be Custom Designed to Meet Your Needs**
- **Powder Paint, KYNAR®, Clear Anodized, and Bronze Finishes**
- **Fabricated in Our California Facility for Prompt Service**

CRL Sunshades not only provide solar protection but also add to the aesthetics of the building. A Custom Sunshade installation involves a group of talented people to get it right. First, the architect and property owner decides on a plan that meets the building's criteria for visual aesthetics, energy conservation, and budget. Then our Architectural and Ornamental Metals Technical Sales Department works with all the parties involved to assure a functioning and attractive Sunshade installation is completed. We perform engineering for a safe and long-lasting job, and provide shop drawings for approval.

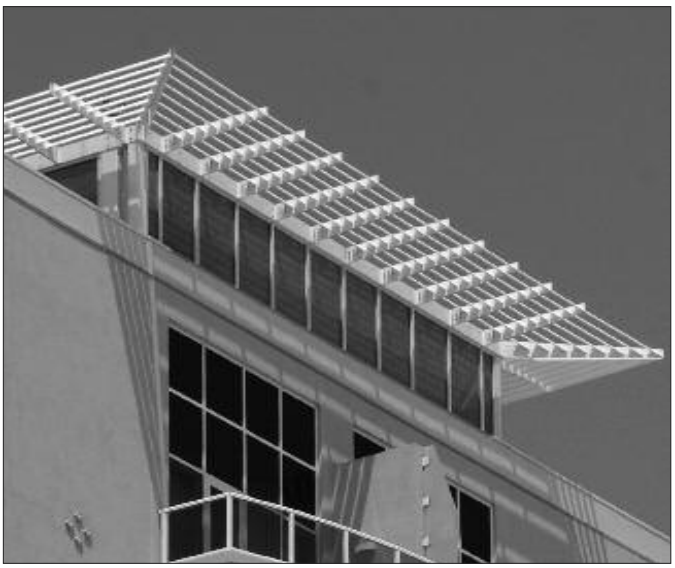

SUN CONTROL SYSTEMS

Custom Fabricated Sunshades

Project: Goodwill Industries, Nashville, TN

Project: The Vantage Condominiums, Palo Alto, CA

Project: Kaiser Permanente, Corona, CA

SUN CONTROL SYSTEMS

Custom Fabricated Sunshades

Project: Agua Caliente Casino, Rancho Mirage, CA

Project: Jewish Home for the Aging, Sherman Oaks, CA

Project: Sunset Gower Studios, Hollywood, CA

Project: Portneuf Medical Center, Pocatello, ID

SUN CONTROL SYSTEMS

Custom Fabricated Sunshades

Project: Private Condominiums, Chicago, IL

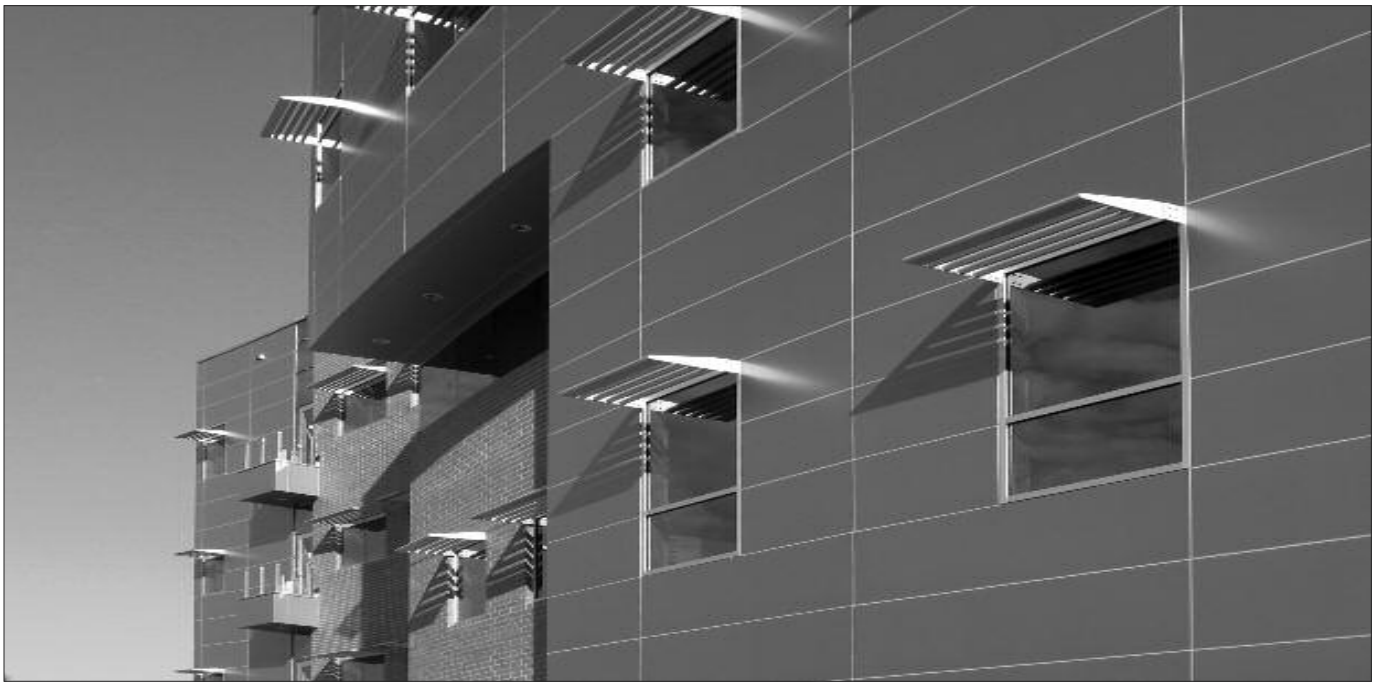

Project: USF Patel Center for Global Solutions, Tampa, FL

SUN CONTROL SYSTEMS

Custom Sunshade Component Parts

Choose one option from each step below to build your Custom Sunshade. (For Infill Panels skip Step 4 and go directly to Step 5).

Step 1 – Outrigger Options (Specify)

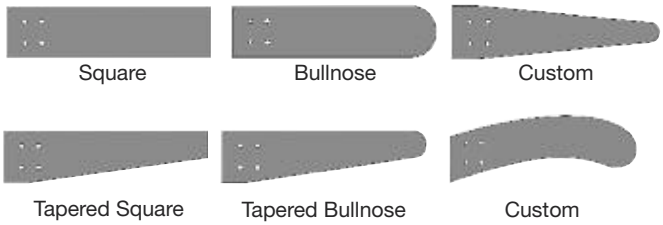

For Additional Details See Opposite Page

Step 2 – Mounting Bracket Options (Specify)

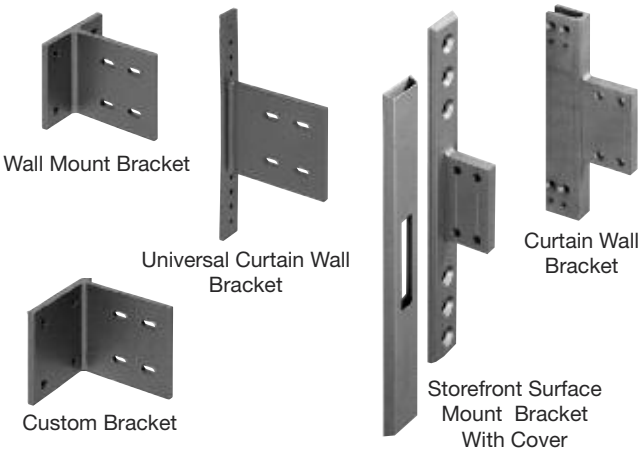

For Additional Details See Page 15-K1

Step 3 – Fascia Options (Specify)

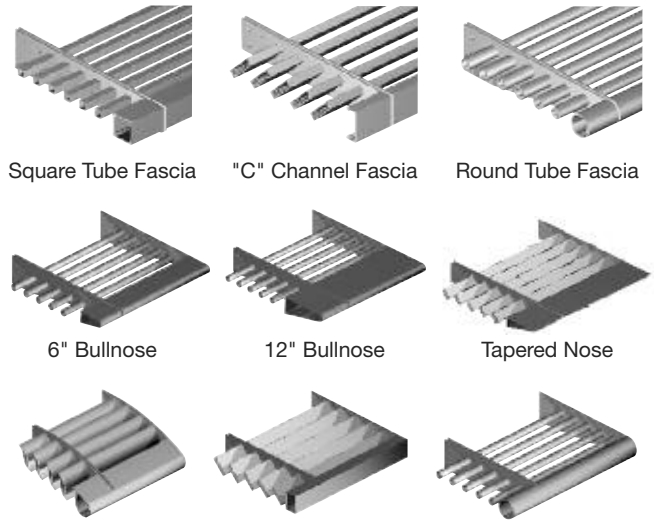

For Additional Details See Page 16-K1

Step 4 – Blade/Louver Options (Specify)

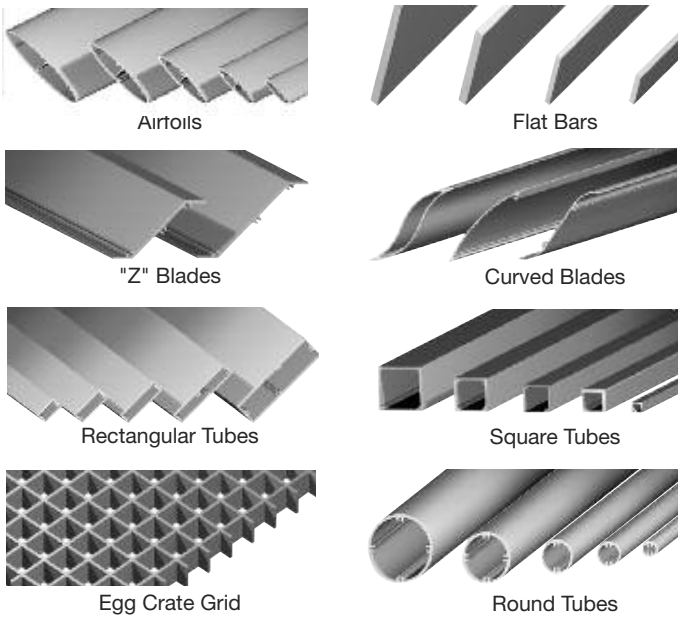

For Additional Details See Pages 17-K1 and 18-K1

Step 5 – Infill Options (Specify)

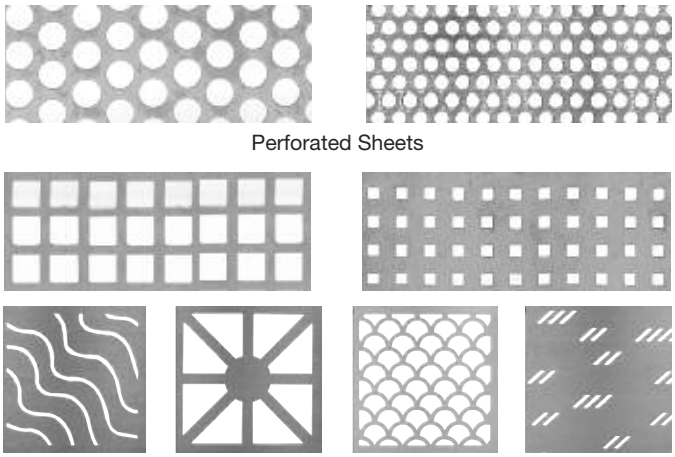

Step 6 – Finish Options (Specify)

- Sky White Gloss
- Oyster White Gloss
- Agate Gray Gloss
- Beige Gray Gloss
- Bronze Matte
- Black Matte
- Metallic Silver
- Unfinished Chromate

We also offer over 250 RAL or NEWLAR® Color Powder Paints, as well as KYNAR® Custom Paints which can be applied to Sunshades. Please contact Architectural and Ornamental Metals Technical Sales for additional information.

SUN CONTROL SYSTEMS

Outrigger Selections
(Specify Finishes)

- Each Available in 24", 30", 36", 42", and 48" (610, 762, 914, 1067, and 1219) Lengths
- Metallic Silver Powder Paint Finish
- Custom Finishes and Lengths Also Available

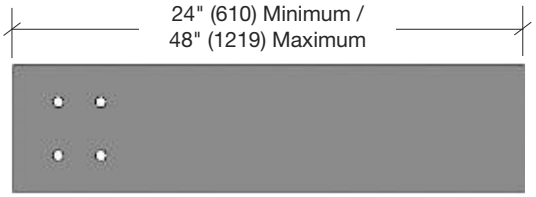

Square Configuration
PART NO. AW0S

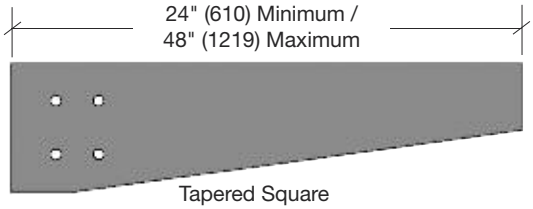

Tapered Square Configuration
PART NO. AW0T

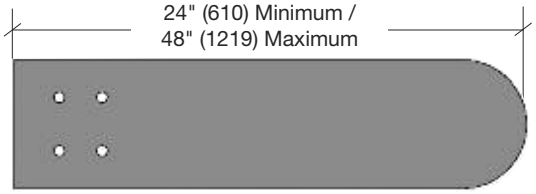

Bullnose Configuration
PART NO. AW0B

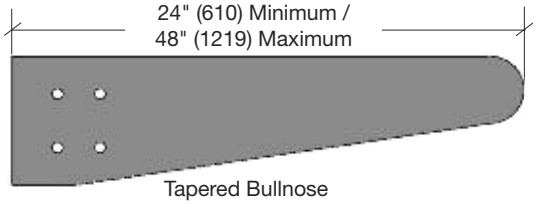

Tapered Bullnose Configuration
PART NO. AW0TB

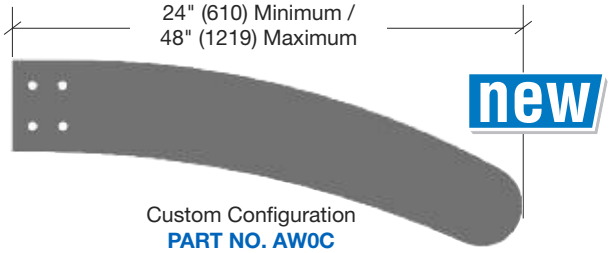

Custom Configuration
PART NO. AW0C

Mounting Bracket Selections
(Specify Finishes)

new

U.S. Aluminum 3250 Series Curtain Wall Bracket
1" (25) Glass
PART NO. AWSB3US

new

Storefront Surface Mount Bracket With Cover
PART NO. AWSB5US

Wall Mount Bracket
PART NO. AWSB1TC

Universal Curtain Wall Bracket
PART NO. AWSB2CW

Custom Bracket
PART NO. AWSB1C

SUN CONTROL SYSTEMS

Fascia Selections

K

SQUARE TUBE

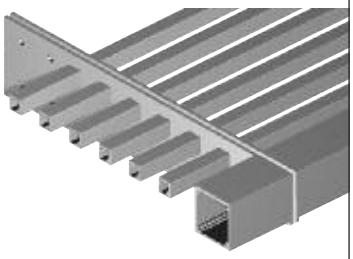

SQUARE TUBE FASCIA 146" (3.7 M) LENGTH

PART NO.	SIZE (W X H)#	FINISH*
AWFST3	3" x 3" (76 x 76)	Specify
AWFST4	4" x 4" (102 x 102)	Specify

Minimum order: 1 stock length. #Must ship common carrier.
*Specify powder coat or KYNAR® paint color when ordering.

"C" CHANNEL

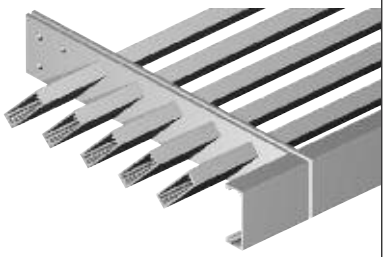

"C" CHANNEL FASCIA 146" (3.7 M) LENGTH

PART NO.	SIZE (W X H)#	FINISH*
AWFC1X3	1" x 3" (25 x 76)	Specify
AWFC2X4	1-1/2" x 4" (38 x 102)	Specify

Minimum order: 1 stock length. #Must ship common carrier.
*Specify powder coat or KYNAR® paint color when ordering.

ROUND TUBE

ROUND TUBE FASCIA 146" (3.7 M) LENGTH

PART NO.	DIAMETER#	FINISH*
AWFR3	3" (76)	Specify
AWFR4	4" (102)	Specify

Minimum order: 1 stock length. #Must ship common carrier.
*Specify powder coat or KYNAR® paint color when ordering.

new 6" BULLNOSE

BULLNOSE FASCIA 146" (3.7 M) LENGTH

PART NO.	SIZE#	FINISH*
AWB6X	6" (152) Bullnose	Specify

Minimum order: 1 stock length. #Must ship common carrier.
*Specify powder coat or KYNAR® paint color when ordering.

new TAPERED NOSE

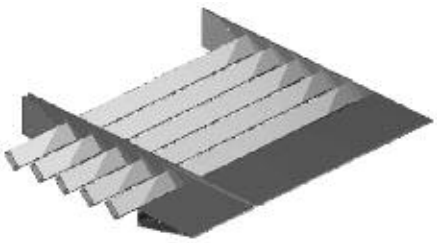

TAPERED NOSE FASCIA 146" (3.7 M) LENGTH

PART NO.	SIZE#	FINISH*
AWB8X	8" (203) Tapered Nose	Specify

Minimum order: 1 stock length. #Must ship common carrier.
*Specify powder coat or KYNAR® paint color when ordering.

new 12" BULLNOSE

BULLNOSE FASCIA 146" (3.7 M) LENGTH

PART NO.	SIZE#	FINISH*
AWB12X	12" (305) Bullnose	Specify

Minimum order: 1 stock length. #Must ship common carrier.
*Specify powder coat or KYNAR® paint color when ordering.

new TEAR DROP TWO-PIECE

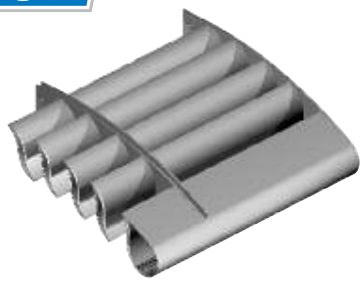

TEAR DROP TWO-PIECE FASCIA 240" (6.1 M) LENGTH

PART NO.	SIZE#	FINISH*
AWFTDUS	4" (102) Tear Drop	Specify

Minimum order: 1 stock length. #Must ship common carrier.
*Specify powder coat or KYNAR® paint color when ordering.

new SQUARE TWO-PIECE

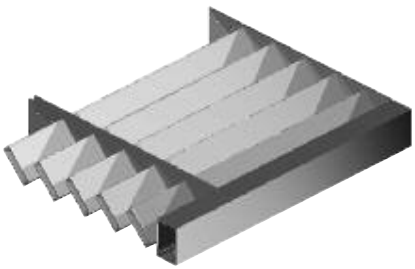

SQUARE TWO-PIECE FASCIA 240" (6.1 M) LENGTH

PART NO.	SIZE#	FINISH*
AWFSTUS	4" (102) Square	Specify

Minimum order: 1 stock length. #Must ship common carrier.
*Specify powder coat or KYNAR® paint color when ordering.

new ROUND TWO-PIECE

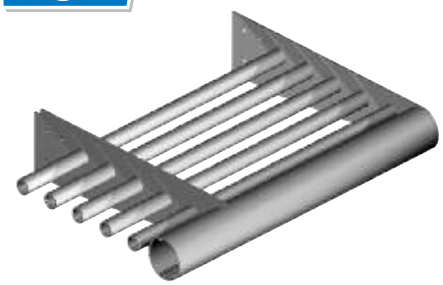

ROUND TWO-PIECE FASCIA 240" (6.1 M) LENGTH

PART NO.	SIZE#	FINISH*
AWFRUS	4" (102) Round	Specify

Minimum order: 1 stock length. #Must ship common carrier.
*Specify powder coat or KYNAR® paint color when ordering.

SUN CONTROL SYSTEMS

Airfoil Blades

- **Five Standard Sizes in Powder Paint, KYNAR®, Clear Anodized, and Bronze Anodized Finishes**
- **146" (3.7 m) Stock Lengths**
- **Custom Sizes Also Available**

CRL's standard selection of Airfoil Blades includes five different sizes. Other sizes and configurations are available on a minimum special order basis.

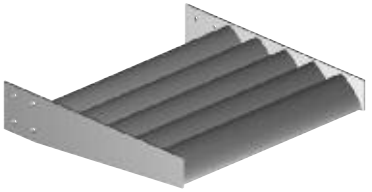

146" (3.7 M) AIRFOIL BLADES

PART NO.	SIZE#	FINISH*
AX04	4" (102)	Specify
AX06	6" (152)	Specify
AX08	8" (203)	Specify
AX010	10" (254)	Specify
AX012	12" (305)	Specify

Minimum order: 1 stock length. #Must ship common carrier.
*Specify finish when ordering. AX012 also available in 240" (6.1 m) lengths.

Round Tube Blades

- **Five Standard Sizes in Powder Paint, KYNAR®, Clear Anodized, and Bronze Anodized Finishes**
- **146" (3.7 m) Stock Lengths**
- **Custom Sizes Also Available**

CRL's standard selection of Round Tube Blades includes five different sizes. Other sizes and configurations are available on a minimum special order basis.

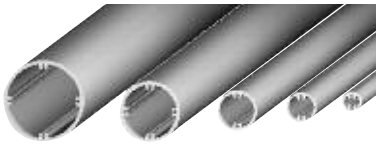

146" (3.7 M) ROUND TUBE BLADES

PART NO.	DIAMETER#	FINISH*
AXR1	1" (25)	Specify
AXR112	1-1/2" (38)	Specify
AXR2	2" (51)	Specify
AXR3	3" (76)	Specify
AXR4	4" (102)	Specify

Minimum order: 1 stock length. #Must ship common carrier.
*Specify finish when ordering.

Square Tube Blades

new

- **Five Standard Sizes in Powder Paint, KYNAR®, Clear Anodized, and Bronze Anodized Finishes**
- **146" (3.7 m) Stock Lengths**
- **Custom Sizes Also Available**

CRL's standard selection of Square Tube Blades includes five different sizes. Other sizes and configurations are available on a minimum special order basis.

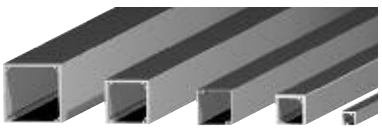

146" (3.7 M) SQUARE TUBE BLADES

PART NO.	SIZE (W X H)#	FINISH*
AXS1	1" x 1" (25 x 25)	Specify
AXS2	2" x 2" (51 x 51)	Specify
AXS23	2-3/8" x 2-3/8" (60 x 60)	Specify
AXS3	3" x 3" (76 x 76)	Specify
AXS4	4" x 4" (102 x 102)	Specify

Minimum order: 1 stock length. #Must ship common carrier.
*Specify finish when ordering.

Rectangular Tube Blades

- **Five Standard Sizes in Powder Paint, KYNAR®, Clear Anodized, and Bronze Anodized Finishes**
- **146" (3.7 m) Stock Lengths**
- **Custom Sizes Also Available**

CRL's standard selection of Rectangular Tube Blades includes five different sizes. Other sizes and configurations are available on a minimum special order basis.

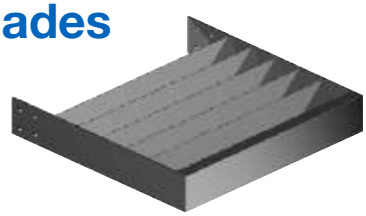

146" (3.7 M) RECTANGULAR TUBE BLADES

PART NO.	SIZE (W X H)#	FINISH*
AXRC1X2	1" x 2" (25 x 51)	Specify
AXRC1X3	1" x 3" (25 x 76)	Specify
AXRC1X4	1" x 4" (25 x 102)	Specify
AXRC1X6	1" x 6" (25 x 152)	Specify
AXRC2X8	2" x 8" (51 x 203)	Specify

Minimum order: 1 stock length. #Must ship common carrier.
*Specify finish when ordering.

SUN CONTROL SYSTEMS

Flat Bar Blade Extrusions

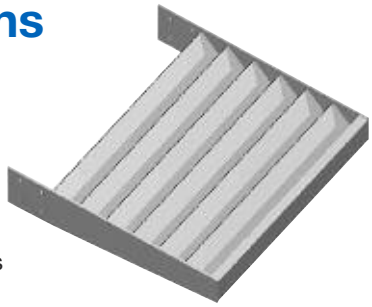

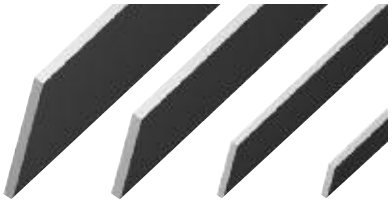

- **146" (3.7 m) Stock Lengths in Powder or KYNAR® Paint Finishes**
- **Twelve Standard Sizes**
- **Custom Sizes Also Available**

CRL's standard selection of Flat Bar Stock Blades includes twelve different width sizes. Each Blade comes in a 146" (3.7 m) stock length, and is available in Powder or KYNAR® Painted finishes, you specify at time of order. Custom sizes and configurations are available upon request.

146" (3.7 M) FLAT BAR EXTRUSIONS#

PART NO.*	WIDTH	THICKNESS
AXF34X18	3/4" (19)	1/8" (3.2)
AXF1X18	1" (25)	1/8" (3.2)
AXF114X18	1-1/4" (32)	1/8" (3.2)
AXF112X18	1-1/2" (38)	1/8" (3.2)
AXF134X18	1-3/4" (45)	1/8" (3.2)

Minimum order: 1 stock length. #Must ship common carrier. *Specify finish when ordering.

146" (3.7 M) FLAT BAR EXTRUSIONS#

PART NO.*	WIDTH	THICKNESS
AXF2X14	2" (51)	1/4" (6.3)
AXF214X14	2-1/4" (57)	1/4" (6.3)
AXF212X14	2-1/2" (63)	1/4" (6.3)
AXF3X14	3" (76)	1/4" (6.3)
AXF4X14	4" (102)	1/4" (6.3)
AXF5X14	5" (127)	1/4" (6.3)
AXF6X14	6" (152)	1/4" (6.3)

Minimum order: 1 stock length. #Must ship common carrier. *Specify finish when ordering.

Alternative Blade Extrusions

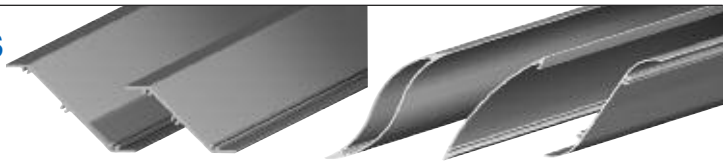

- **Powder, KYNAR®, Clear or Bronze Anodized Finishes**
- **146" (3.7 m) Stock Lengths**
- **Custom Sizes Also Available**

new

Two standard Z-Shape Blades with the newly added S-Shape and C-Shape Blades. Each Blade comes in 146" (3.7 m) stock lengths and can be finished in Powder Coat, KYNAR®, Clear Anodized or Bronze Anodized.

146" (3.7 M) "S" AND "C" SHAPE EXTRUSIONS#

PART NO.*	DESCRIPTION
AXZ4ST	S-Shape Tube
AXZ4C	C-Shape
AXZ4S	S-Shape

Minimum order: 1 stock length. #Must ship common carrier.
*Specify finish when ordering.

Egg Crate Blades

- **Powder or KYNAR® Painted Finishes Available**
- **Two Standard Sizes**
- **Custom Grid Sizes Also Available**

CRL's Standard Egg Crates are constructed of 1/8" x 2" (3.2 x 51) aluminum bar stock. The two standard sizes are 24" x 72" (610 x 1829) and 36" x 72" (914 x 1829).

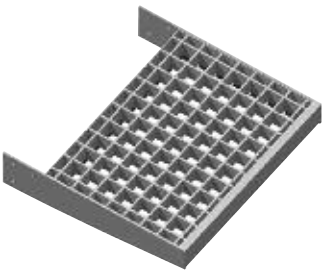

PART NO.*	SIZE#
AW2E24	24" x 72" (610 x 1829)
AW2E36	36" x 72" (914 x 1829)

Minimum order: 1 each. #Must ship common carrier.
*Specify finish when ordering.

Corrugated Stainless Steel Perforated Blades

new

- **Powder or KYNAR® Painted Finishes**
- **Two Standard Sizes**
- **Custom Grid Sizes Also Available**

Our Corrugated Stainless Steel Perforated Blades provide a unique look while providing shade from the sun, reducing interior heat, and increase the efficiency of cooling systems.

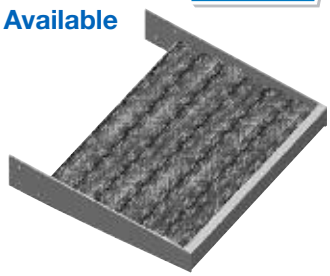

PART NO.*	SIZE#
PN7750	24" x 72" (610 x 1829)
PN7751	36" x 72" (914 x 1829)

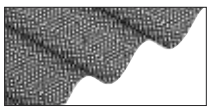

Minimum order: 1 each. #Must ship common carrier.
*Specify finish when ordering.

SUN CONTROL SYSTEMS

Special Features

- **Designed for Our Series 3250 Curtain Wall System**
- **Vertical or Horizontal Mounting Options**
- **Structurally Designed to Meet Project-Required Load Values**
- **Retrofit Options Available**
- **Available in Stock Lengths Up to 24' (7.3 M)**
- **Several Profiles to Choose From**

Extruded Aluminum Sun Control Panels are now available using fins for vertical and horizontal sunshades. These extrusions snap and mechanically fasten directly onto our popular Series 3250 Curtain Wall System to allow varying amounts of sunlight to enter into the building, providing a healthy environment for the occupants.

For additional information contact our Architectural and Ornamental Metals Technical Sales at (800) 421-6144 in the U.S., (877) 421-6144 from Canada, or (323) 588-1281 International. Ask for Ext. 7770. You can also email us at **archmetals@crlaurence.com**.

Sun Control Panels

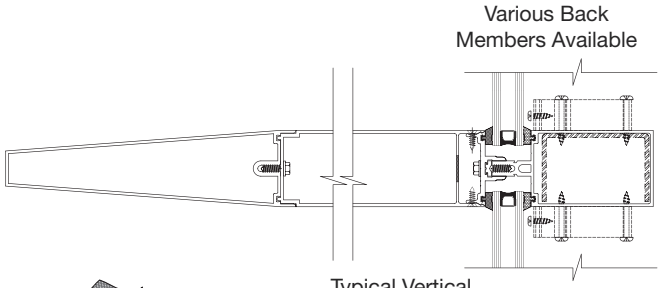

Typical Vertical
Section Detail

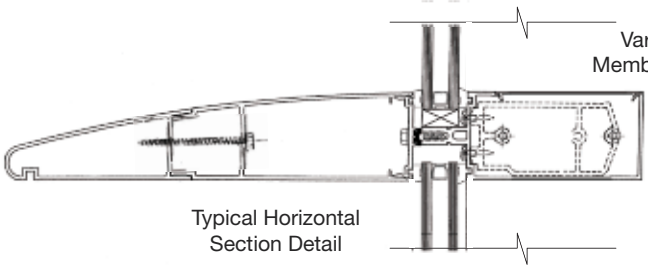

Typical Horizontal
Section Detail

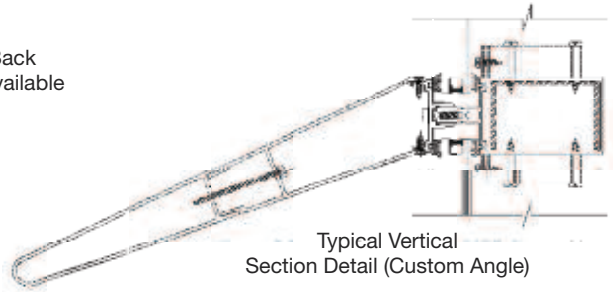

Typical Vertical
Section Detail (Custom Angle)

SUN CONTROL SYSTEMS

Special Features

- **Three Standard Models With Silver Metallic Powder Paint Finish**
- **Efficient Light Transmission**
- **Practical Design for Ease of Installation**
- **Custom Sizes and Finishes Also Available**

Interior Light Shelf Systems

- **Series CRL7110**
- **Series CRL7120**
- **Series CRL7130**

new

MANUFACTURED IN THE USA BY C.R. LAURENCE
An ISO9001:2008 Certified Company

The CRL7100 Series Interior Light Shelf bounces incident sunlight deep into a building's interior, evenly distributing natural light towards the ceiling. The result: Efficient light transmission providing superior amounts of actual and perceived natural daylight. This system reduces the need for daytime lighting, helping earn points to meet your LEED® requirements. Available with Round, Square, and Cove Fascia options.

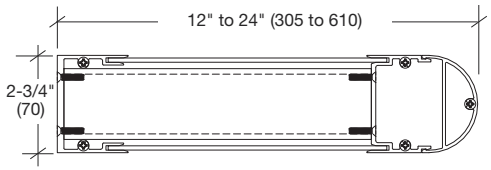

CRL7110 SERIES STANDARD SIZE ROUND FASCIA SYSTEM

PART NO.	LENGTH	PROJECTION	FINISH
AW711014SM	48" (1219)	12" (305)	Silver Metallic
AW711016SM	72" (1829)	12" (305)	Silver Metallic
AW711018SM	96" (2438)	12" (305)	Silver Metallic
AW711024SM	48" (1219)	24" (610)	Silver Metallic
AW711026SM	72" (1829)	24" (610)	Silver Metallic
AW711028SM	96" (2438)	24" (610)	Silver Metallic

Minimum order: 1 each. Must ship common carrier.

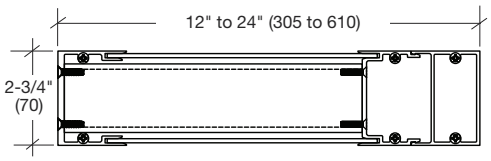

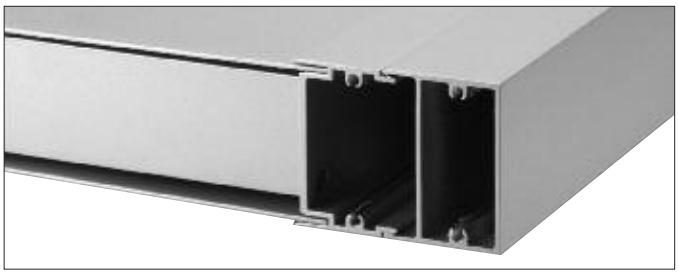

CRL7120 SERIES STANDARD SIZE SQUARE FASCIA SYSTEM

PART NO.	LENGTH	PROJECTION	FINISH
AW712014SM	48" (1219)	12" (305)	Silver Metallic
AW712016SM	72" (1829)	12" (305)	Silver Metallic
AW712018SM	96" (2438)	12" (305)	Silver Metallic
AW712024SM	48" (1219)	24" (610)	Silver Metallic
AW712026SM	72" (1829)	24" (610)	Silver Metallic
AW712028SM	96" (2438)	24" (610)	Silver Metallic

Minimum order: 1 each. Must ship common carrier.

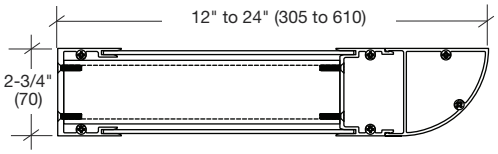

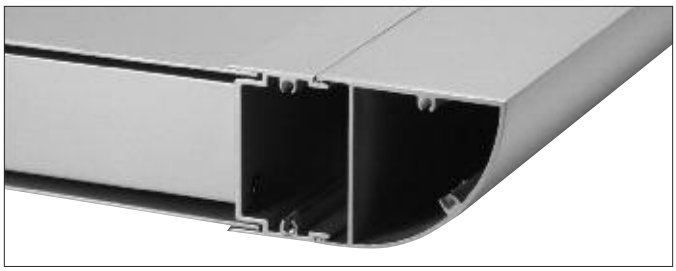

CRL7130 SERIES STANDARD SIZE COVE FASCIA SYSTEM

PART NO.	LENGTH	PROJECTION	FINISH
AW713014SM	48" (1219)	12" (305)	Silver Metallic
AW713016SM	72" (1829)	12" (305)	Silver Metallic
AW713018SM	96" (2438)	12" (305)	Silver Metallic
AW713024SM	48" (1219)	24" (610)	Silver Metallic
AW713026SM	72" (1829)	24" (610)	Silver Metallic
AW713028SM	96" (2438)	24" (610)	Silver Metallic

Minimum order: 1 each. Must ship common carrier.

SUN CONTROL SYSTEMS

Options

MANUFACTURED IN THE USA BY C.R. LAURENCE
An ISO9001:2008 Certified Company

new Interior Light Shelf Systems

- Series CRL7110
- Series CRL7120
- Series CRL7130

Step 1 – Mounting Channels (Specify)

"C" MOUNTING CHANNEL 146" (3.7 M) LENGTH#

PART NO.	WIDTH	THICKNESS
AWMC2M	2-3/4" (70)	Mill
AWMC2SM	2-3/4" (70)	Silver Metallic
AWMC2PTC	2-3/4" (70)	Powder Coat (Specify)

Minimum order: 1 each. #Must ship common carrier.

Step 2 – Fascias (Specify)

ROUND FASCIA 146" (3.7 M) LENGTH#

PART NO.	THICKNESS
AWF275M	Mill
AWF275SM	Silver Metallic
AWF275PTC	Powder Coat (Specify)

Minimum order: 1 each. #Must ship common carrier.

SQUARE FASCIA 146" (3.7 M) LENGTH#

PART NO.	FINISH
AWFS275M	Mill
AWFS275SM	Silver Metallic
AWFS275PTC	Powder Coat (Specify)

Minimum order: 1 each. #Must ship common carrier.

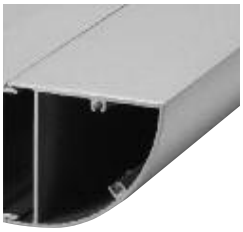

COVE FASCIA 146" (3.7 M) LENGTH#

PART NO.	FINISH
AWMFC275M	Mill
AWMFC275SM	Silver Metallic
AWMFC275PTC	Powder Coat (Specify)

Minimum order: 1 each. #Must ship common carrier.

Step 3 – Infill Panels (Specify)

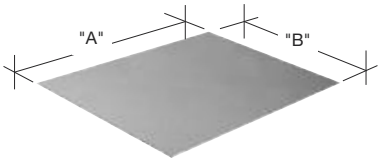

ALUMINUM .125" (3.2) SOLID METAL (CUT TO SIZE)

PART NO.	"A" DIMENSION	"B" DIMENSION	THICKNESS
PN18MLC	Specify	Specify	Mill
PN18SMC	Specify	Specify	Silver Metallic
PN18PTC	Specify	Specify	Powder Coat (Specify)

Minimum order: 1 each.

Step 4 – End Caps (Specify)

CRL7110 SERIES END CAPS

PART NO.	SIZE	FINISH
AW71101ECM	12" (305)	Mill
AW71101ECSM	12" (305)	Silver Metallic
AW71101ECPT	12" (305)	Powder Coat (Specify)
AW71102ECM	24" (610)	Mill
AW71102ECSM	24" (610)	Silver Metallic
AW71102ECPT	24" (610)	Powder Coat (Specify)

Minimum order: 1 each.

CRL7120 SERIES END CAPS

PART NO.	SIZE	FINISH
AW71201ECM	12" (305)	Mill
AW71201ECSM	12" (305)	Silver Metallic
AW71201ECPT	12" (305)	Powder Coat (Specify)
AW71202ECM	24" (610)	Mill
AW71202ECSM	24" (610)	Silver Metallic
AW71202ECPT	24" (610)	Powder Coat (Specify)

Minimum order: 1 each.

CRL7130 SERIES END CAPS

PART NO.	SIZE	FINISH
AW71301ECM	12" (305)	Mill
AW71301ECSM	12" (305)	Silver Metallic
AW71301ECPT	12" (305)	Powder Coat (Specify)
AW71302ECM	24" (610)	Mill
AW71302ECSM	24" (610)	Silver Metallic
AW71302ECPT	24" (610)	Powder Coat (Specify)

Minimum order: 1 each.

Step 5 – Finishes (Specify)

- Sky White Gloss
- Oyster White Gloss
- Agate Gray Gloss
- Beige Gray
- Bronze Matte
- Black Matte
- Metallic Silver
- Unfinished Chromate

We also offer over 250 RAL or NEWLAR® Color Powder Paints, as well as KYNAR® Custom Paints which can be applied to Sunshades. Please contact Architectural and Ornamental Metals Technical Sales for additional information.

SUN CONTROL SYSTEMS

Special Features

Vertical Screen Systems
- Series CRL8010
- Series CRL8020

CRL8010 ALUMINUM AIRFOIL VERTICAL SCREEN

- Improves Design and Aesthetics of the Building
- Reduces Direct Sunlight While Maintaining View
- Custom Made to Your Specifications
- Custom Powder or KYNAR® Paint Finishes

These Aluminum Vertical Screens not only provide solar protection but also add to the aesthetics of the building. Aluminum Vertical Screens can also be used to conceal unsightly equipment at buildings and protect the appearance of the structure. Each Vertical Screen System is built to specifications in our Los Angeles facility under strict standards that put us at the forefront of manufacturing excellence.

new

MANUFACTURED IN THE USA BY C.R. LAURENCE
An ISO9001:2008 Certified Company

PART NO. AW8010*
*Must Specify Finish

CRL8020 ALUMINUM "Z" BLADE VERTICAL SCREEN

- Reduces Direct Sunlight
- Custom Made to Your Specifications
- Custom Powder or KYNAR® Paint Finishes

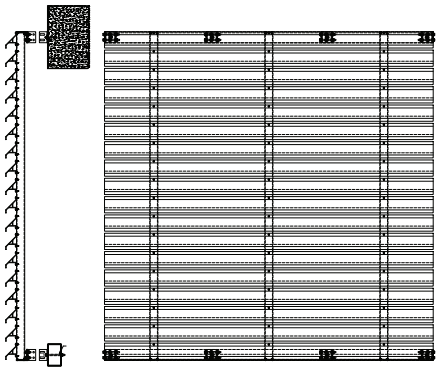

new

MANUFACTURED IN THE USA BY C.R. LAURENCE
An ISO9001:2008 Certified Company

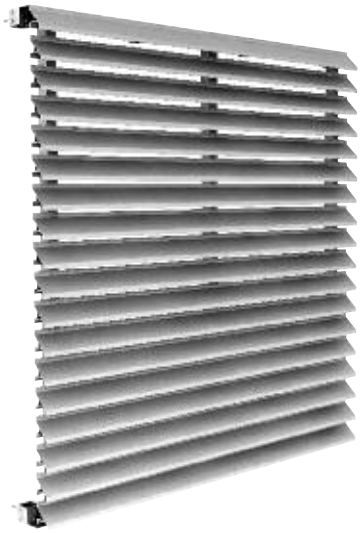

PART NO. AW8020*
*Must Specify Finish

VERTICAL SCREEN MOUNTING BRACKETS

- Structurally Designed to Meet the Load Values Required on the Project
- For Metal or Concrete Attachment
- Powder or KYNAR® Paint Finishes Available

We engineer and fabricate structural sound Vertical Screen Mounting Brackets for concrete or steel support. We also have the manufacturing and engineering resources to design and manufacturer Custom Brackets to meet your installation needs.

new

(Two Sets Shown)

PART NO.	FINISH
AWSB3CM	Mill
AWSB3CSM	Silver Metallic
AWSB3CPTC	Powder Coat (Specify)

Minimum order: 1 set.

SUN CONTROL SYSTEMS

Options

MANUFACTURED IN THE USA BY C.R. LAURENCE
An ISO9001:2008 Certified Company

new

Vertical Screen Systems
- Series CRL8010
- Series CRL8020

Step 1 – Blades (Specify)

- **Two Styles Available in 20' (6.1 m) Stock Lengths**

"Z" BLADE 240" (6.1 M) LENGTH#

PART NO.	FINISH
AWFZ275M	Mill
AWFZ275SM	Silver Metallic
AWFZ275PTC	Powder Coat (Specify)

Minimum order: 1 stock length. #Must ship common carrier.

17" (432) AIRFOIL BLADE 240" (6.1 M) LENGTH#

PART NO.	FINISH
AX017M	Mill
AX017SM	Silver Metallic
AX017PTC	Powder Coat (Specify)

Minimum order: 1 stock length. #Must ship common carrier.

17" (432) AIRFOIL CONNECTION BRACKET

PART NO.	FINISH
AW80BKM	Mill
AW80BKSM	Silver Metallic
AW80BKPTC	Powder Coat (Specify)

Minimum order: 1 each.

Step 2 – Frame Support (Specify)

- **Stock Pieces; No Prep Required**
- **Fully Fabricated Components**
- **Powder Coat or KYNAR® Paint Finishes Available**

CRL's standard selection of Vertical Screen Horizontal Support Angle and Vertical Support Tube gives you the ability to fabricate your own systems or order replacement parts quickly.

4" X 4" SUPPORT ANGLE 240" (6.1 M) LENGTH#

PART NO.	SIZE (W X H)	FINISH
AXL4X4M	4" x 4" (102 x 102)	Mill
AXL4X4SM	4" x 4" (102 x 102)	Silver Metallic
AXL4X4PTC	4" x 4" (102 x 102)	Powder Coat (Specify)

Minimum order: 1 stock length. #Must ship common carrier.

VERTICAL SUPPORT TUBE 146" (3.7 M) LENGTH#

PART NO.	SIZE (W X H)	FINISH
AXRC1X3M	1" x 3" (25 x 76)	Mill
AXRC1X3SM	1" x 3" (25 x 76)	Silver Metallic
AXRC1X3PTC	1" x 3" (25 x 76)	Powder Coat (Specify)

Minimum order: 1 stock length. #Must ship common carrier.

Step 3 – End Caps (Specify)

- **Exclusively for 17" (432) Airfoil Blade**
- **Installation Screws Included**

PART NO.	FINISH
AW8010ECM	Mill
AW8010ECSM	Silver Metallic
AW8010ECPT	Powder Coat (Specify)

Minimum order: 1 each.

Step 4 – Finishes (Specify)

- Sky White Gloss
- Oyster White Gloss
- Agate Gray Gloss
- Beige Gray
- Bronze Matte
- Black Matte
- Metallic Silver
- Unfinished Chromate

We also offer over 250 RAL or NEWLAR® Color Powder Paints, as well as KYNAR® Custom Paints which can be applied to Sunshades. Please contact Architectural and Ornamental Metals Technical Sales for additional information.

SUN CONTROL SYSTEMS

Special Features

Trellis Systems
- Series AT710
- Series AT720

AT710 SERIES CUSTOM ALUMINUM TRELLIS WITH T-BRACKET MOUNTING OPTION

- **Improves Design and Aesthetics of the Building**
- **Reduces Direct Sunlight While Maintaining View**
- **Custom Made to Your Specifications**
- **Custom Powder or KYNAR® Paint Finishes**

We offer the AT710 Series Aluminum Trellis in custom sizes, manufactured to exactly your specifications in our state-of-the-art manufacturing facility in Los Angeles, California. Contact CRL Architectural and Ornamental Metals Technical Sales for additional information.

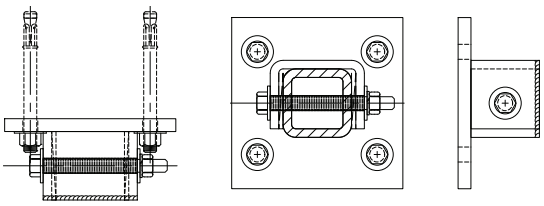

T-Bracket Mounting

PART NO. AT710*
*Must Specify Finish

AT720 SERIES CUSTOM ALUMINUM TRELLIS WITH STANDOFF MOUNTING OPTION

- **Custom Made to Your Specifications**
- **Improves Design and Aesthetics of the Building**
- **Reduces Direct Sunlight**
- **Powder or KYNAR® Coated Finishes**

CRL offers the AT720 Series Aluminum Trellis in custom sizes. CRL will custom manufacture the AT720 Series to exactly your specifications in our state-of-the-art manufacturing facility in Los Angeles, California. Contact CRL Architectural and Ornamental Metals Technical Sales for additional information.

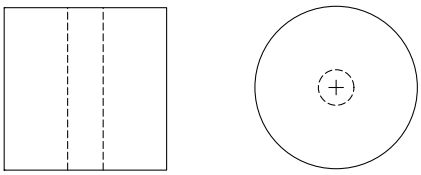

Standoff Mounting

PART NO. AT720*
*Must Specify Finish

SUN CONTROL SYSTEMS

Options

Step 1 – Frames (Specify)

- Mill, Silver Metallic, or Powder Coat Finishes

1/2" FRAME 146" (3.7 M) LENGTH#

PART NO.	SIZE	FINISH
AXF8X12M	1/2" x 8" (12.7 x 203)	Mill
AXF8X12SM	1/2" x 8" (12.7 x 203)	Silver Metallic
AXF8X12PTC	1/2" x 8" (12.7 x 203)	Powder Coat (Specify)

Minimum order: 1 stock length. #Must ship common carrier.

Step 2 – Infill Blades (Specify)

- Airfoil Profile in Three Standard Sizes
- Mill, Powder Coat, or KYNAR® Finishes

AIRFOILS 146" (3.7 M) LENGTH#

PART NO.	SIZE	FINISH
AX08M	8" (203)	Mill
AX08PT	8" (203)	Powder Coat (Specify)
AX08KN	8" (203)	KYNAR® (Specify)
AX010M	10" (254)	Mill
AX010PT	10" (254)	Powder Coat (Specify)
AX010KN	10" (254)	KYNAR® (Specify)
AX012M	12" (305)	Mill
AX012PT	12" (305)	Powder Coat (Specify)
AX012KN	12" (305)	KYNAR® (Specify)

Minimum order: 1 stock length. #Must ship common carrier.

- Rectangular Profile in 146" (3.7 m) Stock Lengths
- Mill, Powder Coat, or KYNAR® Finishes

RECTANGULAR TUBE 146" (3.7 M) LENGTH#

PART NO.	SIZE	FINISH
AXRC2X8M	2" x 8" (51 x 203)	Mill
AXRC2X8PT	2" x 8" (51 x 203)	Powder Coat (Specify)
AXRC2X8KN	2" x 8" (51 x 203)	KYNAR® (Specify)

Minimum order: 1 stock length. #Must ship common carrier.

Trellis Systems

- Series AT710
- Series AT720

Step 3 – Mounting Brackets (Specify)

- Two Proven, Structurally Sound Mounting Brackets
- Custom Brackets Also Available to Meet Your Needs

MANUFACTURED IN THE USA BY C.R. LAURENCE
An ISO9001:2008 Certified Company

new

T-BRACKET AT710 SERIES

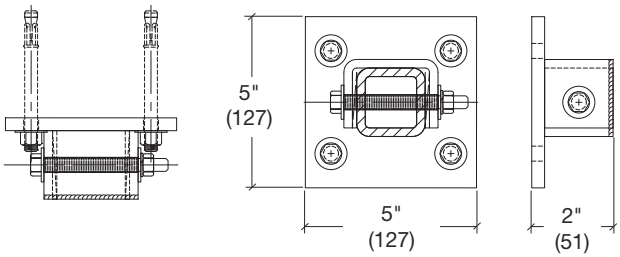

ATSB2 STANDOFF BRACKET FOR AT720 SERIES

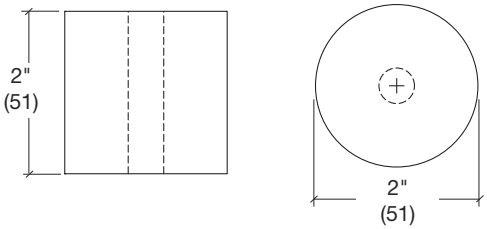

PART NO.	SIZE	FINISH
ATSB1CM	T-Bracket for AT710 Series	Mill
ATSB1CPT	T-Bracket for AT710 Series	Powder Coat (Specify)
ATSB1CKN	T-Bracket for AT710 Series	KYNAR® (Specify)
ATSB2CM	Standoff Bracket for AT720 Series	Mill
ATSB2CPT	Standoff Bracket for AT720 Series	Powder Coat (Specify)
ATSB2CKN	Standoff Bracket for AT720 Series	KYNAR® (Specify)

Minimum order: 1 each.

Step 4 – Finishes (Specify)

- Sky White Gloss
- Oyster White Gloss
- Agate Gray Gloss
- Beige Gray
- Bronze Matte
- Black Matte
- Metallic Silver
- Unfinished Chromate

We also offer over 250 RAL or NEWLAR® Color Powder Paints, as well as KYNAR® Custom Paints which can be applied to Sunshades. Please contact Architectural and Ornamental Metals Technical Sales for additional information.

SUN CONTROL SYSTEMS

Special Features

Aluminum and Steel Canopies

- **C-Shaped or Tube-Shaped Fascias**
- **Available Materials Include: Aluminum, Stainless Steel, or Painted Steel**
- **Infill Options Include: Fiberglass Square Screen, Perforated Metals, Aluminum Blades, or Tempered Laminated Glass**
- **Modular Hanger Rod Designs Available**
- **Custom Sizes and Finishes, Made to Your Specifications**

We fabricate custom Canopies that are both functional and aesthetically pleasing to the eye. We can be involved in all phases of your project from initial design to delivery, with every step controlled by processes that meet strict ISO standards. Our Los Angeles, California manufacturing facility staff incorporates fine craftsmanship and experience in the design, fabrication, and finishing of architectural Metal Canopies. Custom brackets, architectural finishes, and canopy infills are always an option, so you won't have to be limited to just a few. We specialize in meeting your requirements.

For more information on custom Canopies contact our Architectural and Ornamental Metals Technical Sales at (800) 421-6144 in the U.S., (877) 421-6144 from Canada, or (323) 588-1281 International. Ask for Ext. 7770. You can also e-mail us at **archmetals@crlaurence.com**.

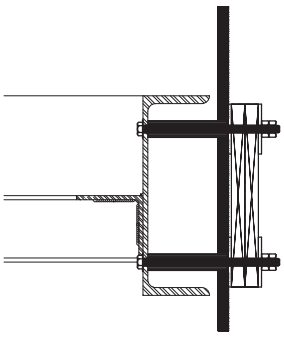

Typical Attachment Detail

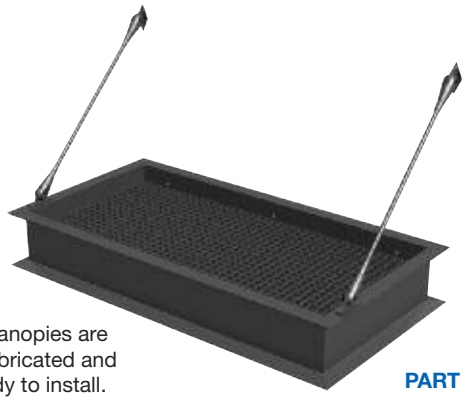

C-Shaped Canopies are completely fabricated and shipped ready to install.

PART NO. CANCS1C

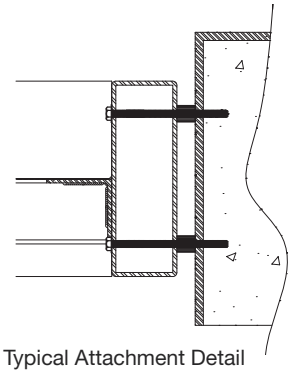

Typical Attachment Detail

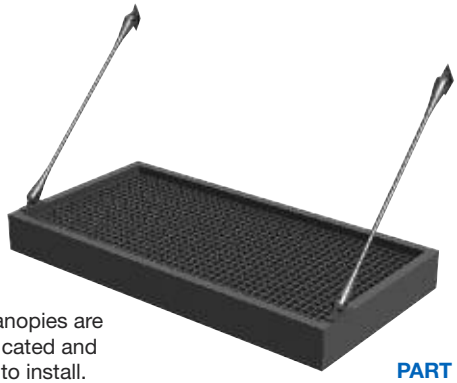

Tube-Shaped Canopies are completely fabricated and shipped ready to install.

PART NO. CANTS1C

SUN CONTROL SYSTEMS

Universal Wall Mounted Glass Awning Brackets

Special Features

- **Used on Flat or Curved Top Segmented Glass Awnings**
- **Fabricated From 304 Alloy Stainless Steel**
- **Available in Brushed or Polished Finishes**
- **Custom Angles or 45 Degrees Corner Brackets are Available on Special Order**
- **Requires 9/16" (14) Thick Tempered, Laminated Glass**

USE MONOLITHIC TEMPERED GLASS

MANUFACTURED IN THE USA BY C.R. LAURENCE
An ISO9001:2008 Certified Company

These Universal Wall Mount Glass Awning Brackets have really become popular, not just for their looks, but also their versatility. Each Bracket has four glass attachments that require one 3/4" (19) hole in the glass per attachment. They are designed to be used with 9/16" (14) thick tempered, laminated glass. The swiveling glass attachments adjust 16 degrees (8 degrees in any direction) to accommodate for segmented, bent or warped glass. For special sizes or configurations contact our Architectural and Ornamental Metals Technical Sales at (800) 421-6144 in the U.S., (877) 421-6144 from Canada, or (323) 588-1281 International. Ask for Ext. 7770. You can also e-mail us at **archmetals@crlaurence.com**.

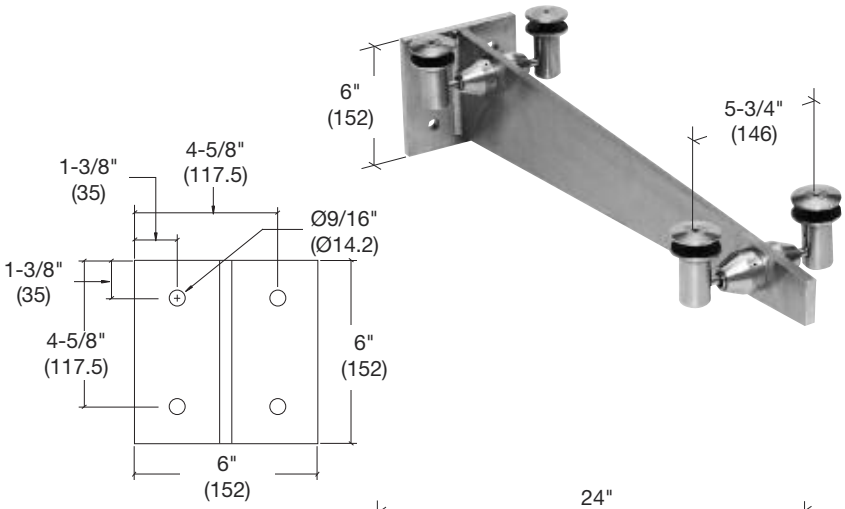

Base Plate

24" (610) GLASS AWNING BRACKET

PART NO.	FINISH
GAB24BS	Brushed Stainless
GAB24PS	Polished Stainless

Minimum order: 1 each.

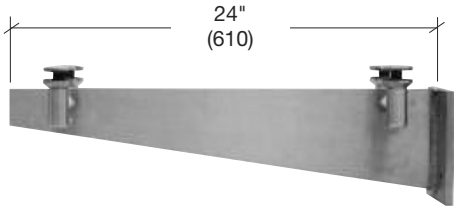

36" (914) GLASS AWNING BRACKET

PART NO.	FINISH
GAB36BS	Brushed Stainless
GAB36PS	Polished Stainless

Minimum order: 1 each.

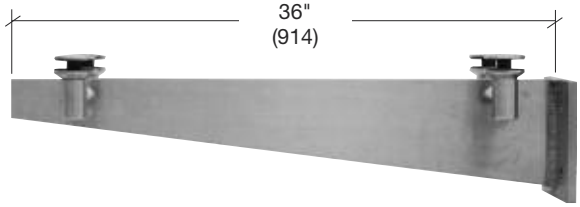

48" (1219) GLASS AWNING BRACKET

PART NO.	FINISH
GAB48BS	Brushed Stainless
GAB48PS	Polished Stainless

Minimum order: 1 each.

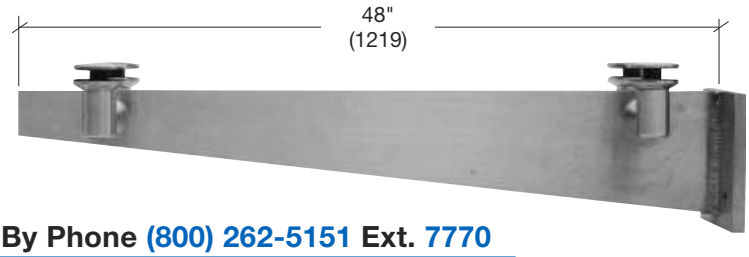

SUN CONTROL SYSTEMS

Special Features

- **Complete Hardware System for 9/16" (14) Tempered Laminated Glass Awnings**
- **Provides Protection From the Weather Without Obstructing the View**
- **Adjustable Slope for Most Weather Conditions**
- **All High Grade 316 Alloy Stainless Steel Components for Panel Sizes Up to 48" (1219) Wide and 72" (1829) Long With Two Rods and Mounting Kits**
- **Easy Installation Allows an Economical and Elegant Solution**

Glass Awning Support System

NOTE: Glass Panel Not Included

Our Glass Awning Support System will give any entrance an uncomplicated, graceful look. With the use of tempered laminated glass you can add a range of glass colors, textures, and special effects not available with typical monolithic glass. This complements and enhances the design of any building.

The use of eye and fork connections makes the installation of our Awning System quick and easy. The Connecting Rods are designed to make field adjustments on varying job conditions a snap. All components are 316 Alloy Stainless Steel for durability in even the harshest of environments.

For additional information, contact our Architectural and Ornamental Metals Technical Sales at (800) 421-6144 in the U.S., (877) 421-6144 from Canada, or (323) 588-1281 International. Ask for Ext. 7770. You can also e-mail us at **archmetals@crlaurence.com**.

USE MONOLITHIC TEMPERED GLASS

Custom Rod Length and Mounting Brackets Also Available (see **crlaurence.com**)

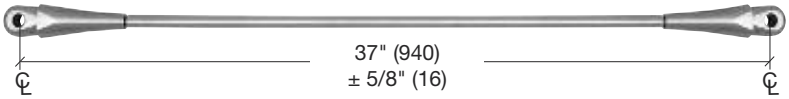

PART NO. GAS137BS
37" Connecting Rod

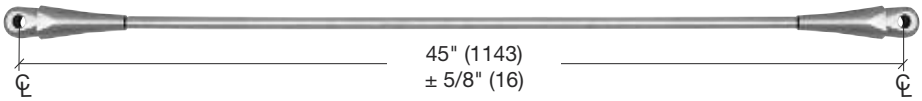

PART NO. GAS145BS
45" Connecting Rod

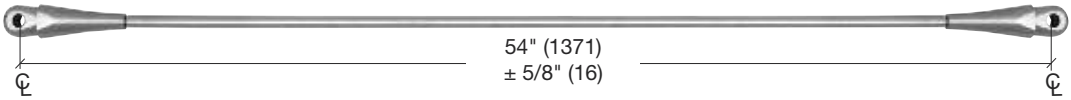

PART NO. GAS154BS
54" Connecting Rod

• Brushed Stainless Finish

PART NO. GAS122BS
Optional Double Plate Pivot for edge of glass panels furthest from building

Oval Top Mounting Bracket and Pivot for edge of glass furthest from building are connected by one of three available Rod lengths

Bottom Mount and Pivot are connected to each other to support edge of glass nearest the building

PART NO. GAS190BS
Mounting Kit

Specifications:

Material: All 316 alloy stainless steel construction.
Typical Panel: 9/16" (14) thick tempered laminated glass comprised of 1/4" (6) tempered glass, .060" (1.5) interlayer, and 1/4" (6) tempered glass.
Glass Fabrication Required: Two 5/8" (16) and two 1-1/16" (27) diameter holes per panel.
Ordering Tip: Though sold individually, two Connecting Rods and two Mounting Kits are required for each panel.

GLASS AWNING SYSTEM COMPONENTS

PART NO.	DESCRIPTION
GAS137BS	Rod for 36" (914) Wide Panels*
GAS145BS	Rod for 42" (1067) Wide Panels*
GAS154BS	Rod for 48" (1219) Wide Panels*
GAS190BS	Mounting Kit Only for One Rod*
GAS122BS	Double Plate Pivot

Minimum order: 1 each. *Two Rods and Two Mounting Kits required for each panel. Stainless Steel Mounting Screws not included.

Online usalum.com By Phone (800) 262-5151 Ext. 7770
Online crlaurence.com By Phone (800) 421-6144 Ext. 7770

SUN CONTROL SYSTEMS

Technical Data

Glass Awning Support System

SYSTEM COMPONENTS

Stainless Steel Mounts (A and B) and Pivots (C) are contained in the GAS190BS Mounting Kit. Order Connecting Rods (D) to suit panel width and application conditions.

TYPICAL INSTALLATION CONDITIONS

The slope of the Awning Panel is limited to a maximum of a 5 degree negative slope from level.

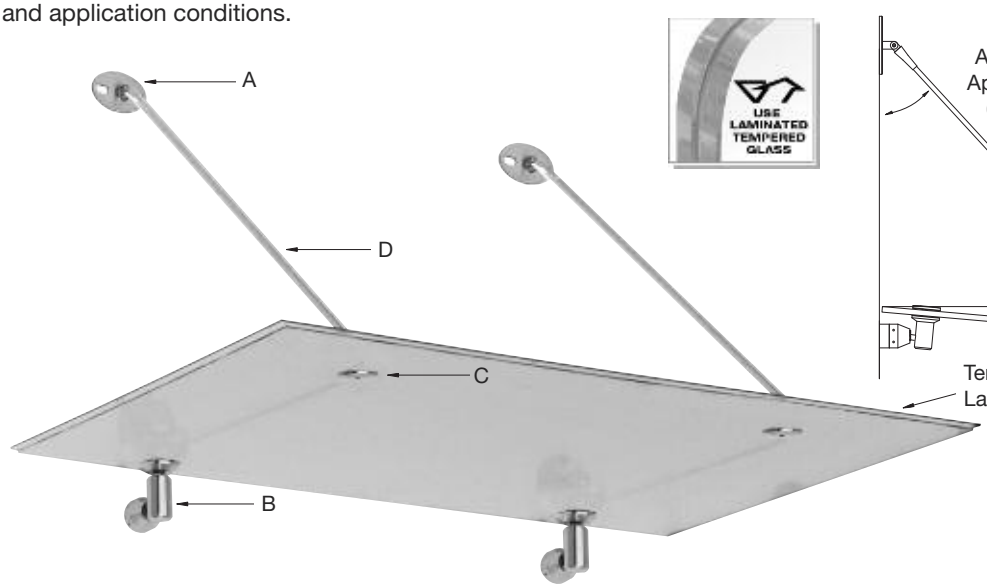

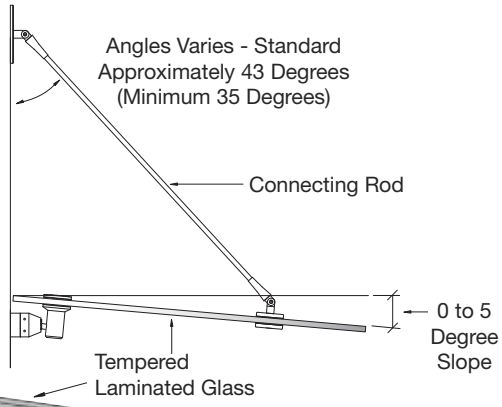

FABRICATION AND DIMENSIONAL INFORMATION FOR AWNING PANEL

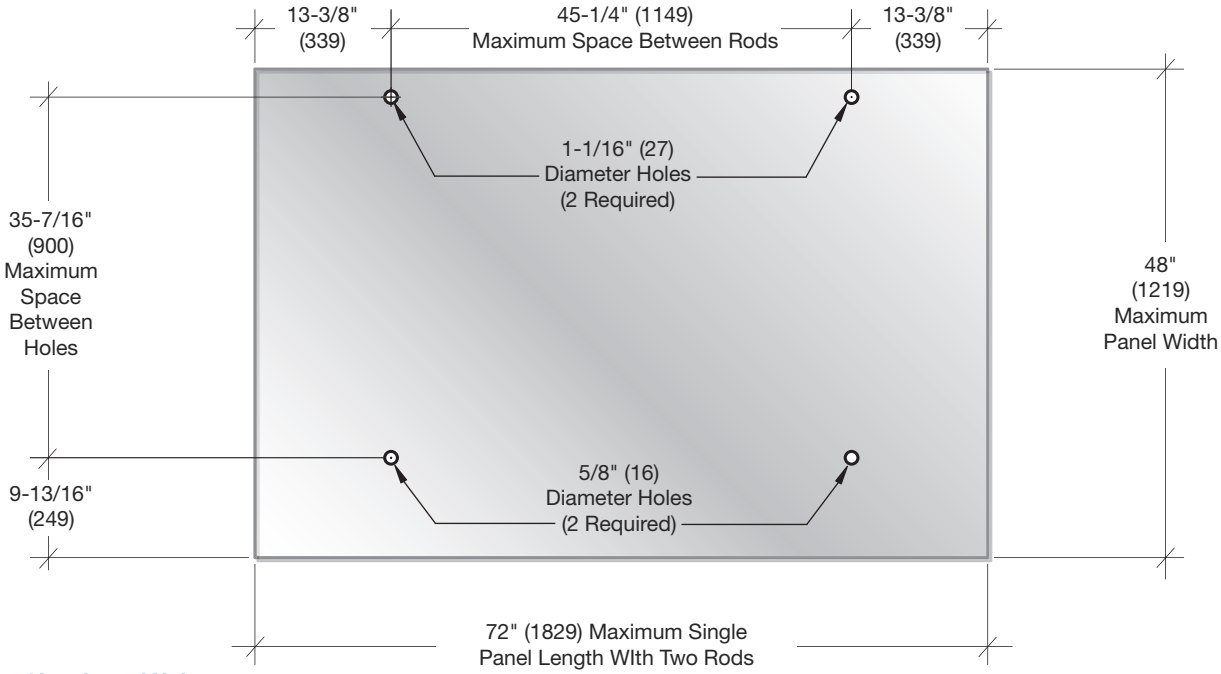

Fabrication of Laminated Units

Awning Panels are constructed using:

- 1/4" (6) tempered glass
- .060" (1.5) interlayer
- 1/4" (6) tempered glass

All of the edges should be polished.

For more information on our Glass Awning System, or for a quote, contact our Architectural and Ornamental Metals Technical Sales at (800) 421-6144 in the U.S., (877) 421-6144 from Canada, or (323) 588-1281 International, and ask for Ext. 7770. You can also e-mail us at **archmetals@crlaurence.com**.

SUN CONTROL SYSTEMS

Mounting Plate Options

Glass Awning Support System

- **Five Standard Designs**
- **Powder, Kynar® Painted, and Brushed 316 Alloy Stainless Steel**
- **Custom Designs Available**

We understand that there are several ways to mount Glass Awnings depending upon the building's structure, that's why we offer you mounting options for every situation. If you don't see a Mounting Plate here that will work for your project, we will be happy to design and custom fabricate one that will suit your needs. Contact Our Architectural and Ornamental Metals Technical Sales at (800) 421-6144 in the U.S., (877) 421-6144 from Canada, or (323) 588-1281 International, and ask for Ext. 7770. You can also e-mail us at **archmetals@crlaurence.com**.

DIAMOND SHAPED MOUNTING PLATE

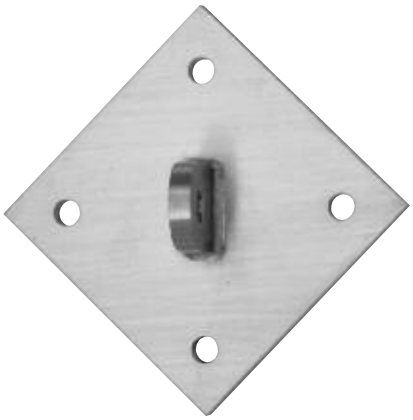

***PART N0. AW9DM**

OVAL MOUNTING PLATE

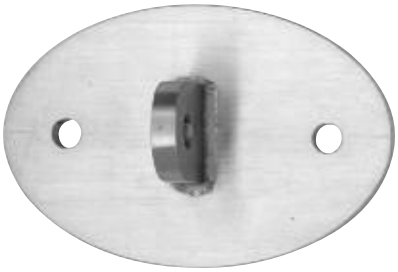

***PART N0. AW90VM**

SQUARE MOUNTING PLATE

***PART N0. AW9SQM**

STOREFRONT TUBE MOUNTING PLATE

***PART N0. AW9SM**

CURTAIN WALL/PLATE MOUNTING PLATE

***PART N0. AW9CWM**

CUSTOM MOUNTING PLATES

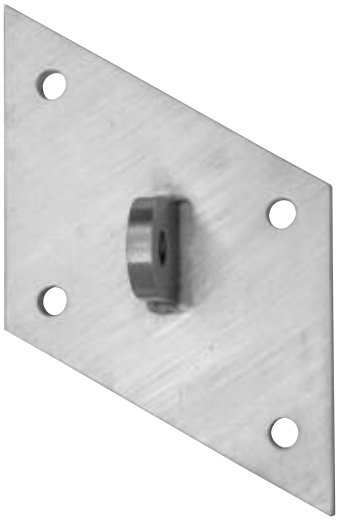

***PART N0. AW9CM**

*Specify finish at time of order. Minimum order is one each. KYNAR® is a registered trademark of Autofina Chemicals, Inc.

Online usalum.com By Phone (800) 262-5151 Ext. 7770
Online crlaurence.com By Phone (800) 421-6144 Ext. 7770

SUN CONTROL SYSTEMS

Tension Rod End Fitting Options

- **Additional Support for Canopies and Awnings**
- **Alloy 316 Brushed Stainless Steel**
- **Available in Four Diameters**
- **Easily Attaches to the Rod (Sold Separately Below)**

Many Glass Awnings require the additional support provided by Tension Rods. Four sizes of End Fittings can be combined with a cut-to-length Tension Rod to achieve the additional support required by the design of your Canopy or Awning.

End Fittings are sold in a set of two (one right hand thread and one left hand thread). When mated with the Tension Rods below (sold separately) adjustments in or out can be made easily by simply rotating the Rod. The adjustment is secured in place with a locking collar.

Glass Awning Support System

ENDS FOR 12 MM ROD (SET OF 2)

PART NO.	CONNECTION WIDTH	CONNECTION HOLE	HOLE TO END
270112	.417" (10.6)	.472" (12)	.906" (23) Maximum

Minimum order: 1 set.

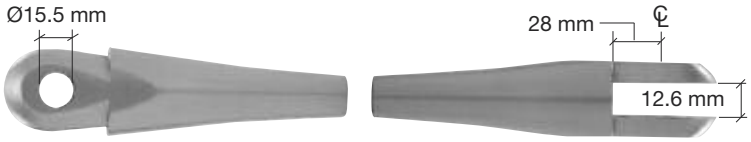

ENDS FOR 28 MM ROD (SET OF 2)

PART NO.	CONNECTION WIDTH	CONNECTION HOLE	HOLE TO END
270116	.496" (12.6)	.610" (15.5)	1.102" (28) Maximum

Minimum order: 1 set.

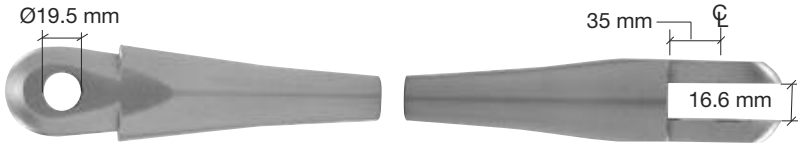

ENDS FOR 28 MM ROD (SET OF 2)

PART NO.	CONNECTION WIDTH	CONNECTION HOLE	HOLE TO END
270120	.653" (16.6)	.768" (19.5)	1.378" (35) Maximum

Minimum order: 1 set.

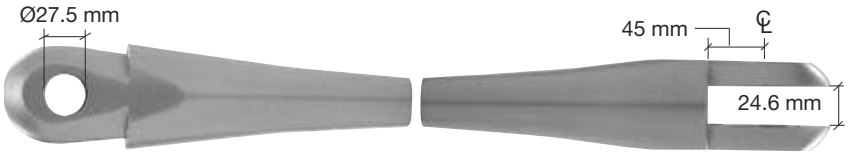

ENDS FOR 28 MM ROD (SET OF 2)

PART NO.	CONNECTION WIDTH	CONNECTION HOLE	HOLE TO END
270128	.968" (24.6)	1.083" (27.5)	1.772" (45) Maximum

Minimum order: 1 set.

Custom Fabricated Tension Rods

- **Alloy 316 Stainless Steel**

CRL Manufacturing will cut to length then fabricate Tension Rods to meet your specifications. The length is from the center-line of the hole in each End Fitting. Select the diameter of the Rod and we will do the rest. Fabricated from Alloy 316 brushed stainless steel.

We cut the Rod to length

We thread the Rod

You install in the field

PART NO.	ROD DIAMETER	ROD LENGTH
270112CR	.472" (12)	Specify
270116CR	.630" (16)	Specify
270120CR	.787" (20)	Specify
270128CR	1.102" (28)	Specify

Minimum order: 1 each.

Loads, specifications, and detailed drawings are available online at **crlaurence.com**. For more information, contact our Architectural and Ornamental Metals Technical Sales Department at (800) 421-6144 in the U.S., (877) 421-6144 from Canada, or (323) 588-1281 International, and ask for Ext. 7770.

Online usalum.com By Phone (800) 262-5151 Ext. 7770
Online crlaurence.com By Phone (800) 421-6144 Ext. 7770

SUN CONTROL SYSTEMS

Accessories

SELF-DRILLING HEX WASHER HEAD #3 SCREWS

- For Aluminum and Steel
- Self-Drilling for Labor Savings
- Immune to Embrittlement Failure

PART NO.	SIZE
12X1HWSD	12-14 x 1" (25)
12X2HWSD	12-14 x 2" (51)
14X1HWSD	1/4-14 x 1" (25)
14X2HWSD	1/4-14 x 2" (51)

Minimum order: 50 each. Must order in increments of 50.

Hex Washer Hex Self-Drilling

8-18 X 3/4" SELF-DRILLING PAN HEAD PHILLIPS SCREWS

- Five Architectural Finishes

PART NO.	FINISH
8X34PHPSDBS	Brushed Stainless
8X34PHPSDPS	Polished Stainless
8X34PHPSDPB	Brass Plated
8X34PHPSDSA	Satin Anodized
8X34PHPSDDU	Dark Bronze

Minimum order: 100 each. Must order in increments of 100.

Pan Phillips Self-Drilling

STOREFRONT ANCHOR SET

- For Aluminum Storefronts

new

- Includes: 1/2-13 x 1-1/2" (38) Flat Socket Cap with 1/2" (12.7) Riv-Nut

PART NO.	SIZE
US12X112SET	1/2-13 x 1-1/2" (38)

Minimum order: 50 each. Must order in increments of 50.

Screws, Bolts, and Anchor Sets

SELF-DRILLING HEX WASHER HEAD SCREWS

- For Exterior Overlapping Sheets and Corner Sheets
- Self-Drilling for Labor Savings
- Side Lap: Steel to Steel
- Rubber Washer Included

PART NO.	SIZE
14X78HWSD	1/4-14 x 7/8" (22)

Minimum order: 50 each. Must order in increments of 50.

Hex Washer Hex Self-Drilling

SELF-TAPPING SCREWS FOR ALUMINUM SUNSHADES

- Stainless Steel

These Stainless Steel Flat Head Phillips Self-Tapping Screws fit into the raceways of our Aluminum Sunshades.

PART NO.	SIZE
1032X34FHPSS	10-32 x 3/4" (19)
1224X34FHPSS	12-24 x 3/4" (19)
1420X1FMS	1/4-20 x 1" (25)

Minimum order: 50 each. Must order in increments of 50.

Flat Phillips Self-Tapping

BOLT ASSEMBLY FOR ALUMINUM SUNSHADES

- Stainless Steel

CRL Bolt Assemblies for Aluminum Sunshades come complete with:

- 1 Each 3/8"-16 x 2" (51) Stainless Steel Hex Bolt
- 2 Each 3/8" (9.5) Stainless Steel Flat Washers
- 1 Each 3/8" (9.5) Stainless Steel Lock Washer
- 1 Each 3/8"-16 Hex Lock Nut

PART NO.	FINISH
AWS38BA	Brushed Stainless

Minimum order: 1 pack.

L

WINDOWS

- Series 7200/7300
- Series 7400
- Series 7500
- Series 7600
- Series 8000/8100/8200

Toll Free Phone Service
(800) 262-5151
Ext. 5305

Toll Free Fax Service
(866) 262-3299
U.S. and Canada

CRL®
U.S. ALUMINUM

usalum.com

L WINDOWS

CRL U.S. ALUMINUM

Surrey City Hall
Surrey, BC

U.S. Aluminum Windows are offered in a number of configurations to meet typical and specialized building conditions. Fixed and operable versions can be retrofit into existing openings or incorporated into curtain wall and window wall systems for new construction. Projected and casement type windows feature quality operating hardware for years of trouble-free service. Locking hardware options assure security, and integrated weatherstripping provides an airtight seal when closed. An array of architectural coatings and anodized finishes can be selected to provide windows that will complement the structure's aesthetic appeal. Accessories such as screens, mulling bars, subsills, head and jamb channels are available to complete the installation.

For a complete Glossary of Common Terms see pages 62-P1 thru 68-P1.

SYSTEM **PAGES**

- **Series 7200/7300 ..... 01-L1 thru 09-L1**
- **Series 7400 ..... 01-L2 thru 10-L2**
- **Series 7500 ..... 01-L3 thru 06-L3**
- **Series 7600 ..... 01-L4 thru 06-L4**
- **Series 8000/8100/8200 ..... 01-L5 thru 09-L5**

For information or other assistance, use our toll free phone or fax service numbers from anywhere in the U.S. or Canada

Toll Free Phone (800) 262-5151 Ext. 5305 Toll Free Fax (866) 262-3299

Contact us through our web site at usalum.com

WINDOWS

Table of Contents

Operable and Fixed Windows
- Series 7200
- Series 7300

SECTION L1 **PAGE**

SPECIFICATIONS .....02-L1 and 03-L1
SPECIAL FEATURES 04-L1
TYPICAL DETAILS FIXED AND PROJECTED, 1" (25) GLASS .....05-L1 and 06-L1
TYPICAL DETAILS WITH SERIES 3250 CURTAIN WALL 1" (25) GLASS 07-L1
OPTIONAL ACCESSORIES 08-L1
HARDWARE SCHEDULE AND GLASS SIZE FORMULAS 09-L1

Project: Los Angeles Valley College, Los Angeles, CA

Due to the diversity in state/provincial, local, and federal laws and codes that govern the design and application of architectural products, it is the responsibility of the individual architect, owner, and installer to ensure that products selected for use on projects comply with all applicable building codes and laws. U.S. Aluminum exercises no control over the use or application of its products, glazing materials, and operating hardware, and assumes no responsibility thereof.

The rapidly changing technology within the architectural aluminum products industry demands that U.S. Aluminum reserve the right to revise, discontinue or change any product line, specification or electronic media without prior written notice.

NOTE: Dimensions in parentheses ( ) are millimeters unless otherwise noted.
Other metric units shown in this publication are:

m - meter	Kg - kilogram
Pa - pascal	KPa - kilopascal
MPa - megapascal	

WINDOWS

Specifications

Operable and Fixed Windows
• Series 7200
• Series 7300

SECTION 08 51 13 ALUMINUM WINDOWS

Drawings and specifications are based on the Series *(specify)* 7200 or 7300 Windows as manufactured by U.S. Aluminum. Whenever substitute products are to be considered, supporting technical literature, samples, drawings, and performance data must be submitted 10 days prior to bid in order to make a valid comparison of the products involved. Test reports certified by an AAMA independent test laboratory must be made available upon request.

L

PART 1 GENERAL

1.01 Work Included
A. Furnish all necessary materials, labor, and equipment for the complete installation of aluminum windows as shown on the drawings and specified herein.
B. Work Not Included: Structural support of the window system, interior closures, trim. *(Specifier list other exclusions)*.

1.02 Related Work
Section 08 40 00 - Entrances and Storefronts
Section 08 44 00 - Glazed Curtain Walls
Section 08 50 00 - Windows

1.03 Testing and Performance Requirements
A. Test Units
1. Air, water, and structural test unit sizes and configuration shall conform to requirement set forth in ANSI/AAMA 101-93 or CSA-A440-98.

B. Test Procedures and Performance
1. **Standards:**
a. Windows shall conform to all requirements for the window type(s) referenced in ANSI/AAMA 101/I.S.2-97, or CSA-A440-98. In addition, the following specific performance requirements shall be met.
2. **Air Infiltration Test:**
a. With window sash and ventilators closed and locked, test unit in accordance with ASTM E 283 at static air pressure difference of 6.24 or 75 Pa (1.5 psf).
b. Air infiltration shall not exceed .10 CFM per foot or .25 m3/h-m of perimeter crack length.
3. **Water Infiltration Test:**
a. With window sash and ventilators closed and locked, test unit in accordance with ASTM E 331 at static pressure difference of 12 psf.
b. There shall be no uncontrolled water leakage.
4. **Uniform Load Structural Test:**
a. With window sash and ventilators closed and locked, test unit in accordance with ASTM E 330 at a static pressure difference of (specify per window system) psf positive pressure and (specify per window system) or ASTM E330-97e1 at a static air pressure difference both positive and negative of 2000 Pa (41.6 psf) and a blow-out test of 5000 Pa (104 psf)
b. At conclusion of test there shall be no glass breakage, permanent damage to fasteners, hardware parts, support arms or actuating mechanisms, nor any other damage which would cause the window to be inoperable.
5. **Condensation Resistance Test (CRF):**
a. With window sash and ventilators closed and locked, test unit in accordance with AAMA 1503.
b. Condensation Resistance Factor (crf) shall be not less than 56.
6. **Thermal Transmittance Test (Conductive U-Value):** in accordance with NFRC-100 and AAMA 1503.
7. **AAMA Testing Procedures:**
a. C-75 Series 7200 Operable Windows
b. C-90 Series 7200 Fixed Windows
c. HC-75 Series 7300 Operable and Fixed Windows
Test Procedures:
AAMA/WDMA/CSA 101/I.S.2/A 440-08 - Laboratory performance testing.
AAMA 502-08 - Newly installed fenestration products.
AAMA 511-08 - Installed fenestration products after 6 months.

1.04 Quality Assurance
A. Provide test reports from AAMA/CSA accredited laboratories certifying the performance as specified in section 1.05 (AAMA) or 11.15 of CSA-A440-98.
B. Test reports shall be accompanied by the window manufacturer's letter of certification stating that the tested window meets or exceeds the referenced criteria for the appropriate ANSI/AAMA 101-93 or CSA-A440-98 window type.

1.05 Submittals
A. Contractor shall submit shop drawings, finish samples, test reports, and warranties.

1.06 Warranties
A. Total Window System
1. The responsible contractor shall assume full responsibility and warrant for one year the windows, hardware, glass (including insulating units), glazing, anchorage and setting system, sealing, flashing, etc., as it relates to air, water, and structural adequacy as called for in the specifications and approved shop drawings.
2. Any deficiencies due to such elements not meeting the specifications shall be corrected by the responsible contractor at his expense during the warranty period.

WINDOWS

Specifications

Operable and Fixed Windows
• Series 7200
• Series 7300

SECTION 08 51 13 ALUMINUM WINDOWS

PART 2 PRODUCTS

2.01 Materials

A. Aluminum
Extruded aluminum shall be 6063-T5 alloy and tempered.

B. Hardware
1. Casement Ventilators: Five knuckle butt hinges with roto operators or 4-bar stainless steel hinges with lever handles.
2. Project-Out Ventilators: 4-bar stainless steel hinges, high pressure die-cast zinc cam handle lock and strike.
3. Project-In Ventilators: 4-bar stainless steel hinges, high pressure die-cast zinc cam handle with concealed zinc plated steel pawl and stainless steel keepers.

C. Weatherstrip
1. Weatherstrip shall be Monsanto Santoprene or equal.

D. Thermal Barrier
1. Barrier material shall be poured-in-place two-part Polyurethane. To ensure that composite strength remains unaltered during thermal cycling, a mechanical bond between the aluminum and the thermal filling shall be created by mechanically abrading the extrusion thermal cavity prior to filling with the Polyurethane polymer. A non-structural thermal barrier is unacceptable.
2. Specified hardware shall not bridge the thermal barrier.

2.02 Fabrication

A. Aluminum
1. Vent extrusions shall have a nominal wall thickness of:
   7200 Series = .062" (1.57)
   7300 Series = .125" (3.2)
2. Mechanical fasteners and hardware items shall not bridge thermal barriers. Thermal barriers shall align at all frame and sash corners.

B. Frame
Frame components shall be mitered or butt jointed, as appropriate to the type of construction required. All joints shall incorporate mechanical fasteners.

C. Sash
1. All sash extrusions shall be tubular.
2. Each corner shall be mitered, reinforced with an extruded aluminum corner key, and hydraulically crimped.
3. Each sash shall have weatherstripping installed in specially designed dovetail grooves in the sash extrusion.

D. Screens (Optional)
1. Screen frames shall be extruded or roll formed aluminum.
2. Screen mounting holes in the window frames shall be factory drilled.
3. Screen mesh shall be aluminum or fiberglass.

E. Glazing
1. Shop and field glazed units are to be glazed with pre-shimmed glazing tape, extruded aluminum glazing beads, and an E.P.D.M. drive-in wedge gasket.

F. Finish
All exposed framing surfaces shall be free of scratches and other serious blemishes. Aluminum extrusions shall be given a caustic etch followed by an anodic oxide treatment to obtain…
(Specify one of the following):
_____#11 Clear Anodic coating
_____#22 Dark Bronze Anodic coating
_____#33 Black Anodic coating
A Fluoropolymer paint coating conforming with the requirements of AAMA 2605. Color shall be *(Specify a U.S. Aluminum standard color)*.

PART 3 EXECUTION

3.01 Inspection

A. Job Conditions
1. Verify that openings are dimensionally within allowable tolerances, plumb, level, clean, provide a solid anchoring surface, and are in accordance with approved shop drawings.

3.02 Installation

A. Use only skilled tradesman with work done in accordance with approved shop drawings and specifications.
B. Plumb and align window faces in a single plane for each wall plane and erect windows and materials square and true adequately anchored to maintain positions permanently when subjected to normal thermal and building movement and specified wind loads.
C. Adjust windows for proper operation after installation.
D. Furnish and apply sealants to provide a weathertight installation at all joints and intersections and at opening perimeters.

3.03 Protection and Cleaning

A. After completion of window installation, windows shall be inspected, put into working order, and left clean, free of labels, dirt, etc. Protection from this point shall be responsibility of general contractor.

WINDOWS

Special Features

Operable and Fixed Windows
- Series 7200
- Series 7300

Projected and casement windows operate by moving away, or projecting, from the window frame, as awning or hopper vents, and as in-swinging or out-swinging casement vents. Projected windows open and close horizontally while casement windows operate on a vertical axis.

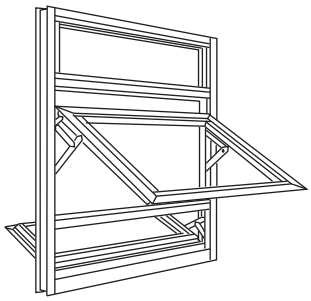

PROJECTED

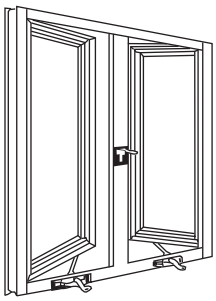

OUT-SWING CASEMENT

U.S. Aluminum offers a full line of operable windows to meet virtually any specification requirement for use in storefront, curtain wall systems, as well as retrofit. All units are tested for air, water, and structural integrity in accordance set forth in ANSI/AAMA 101/ I.S.2-97 or CSA-A440-98.

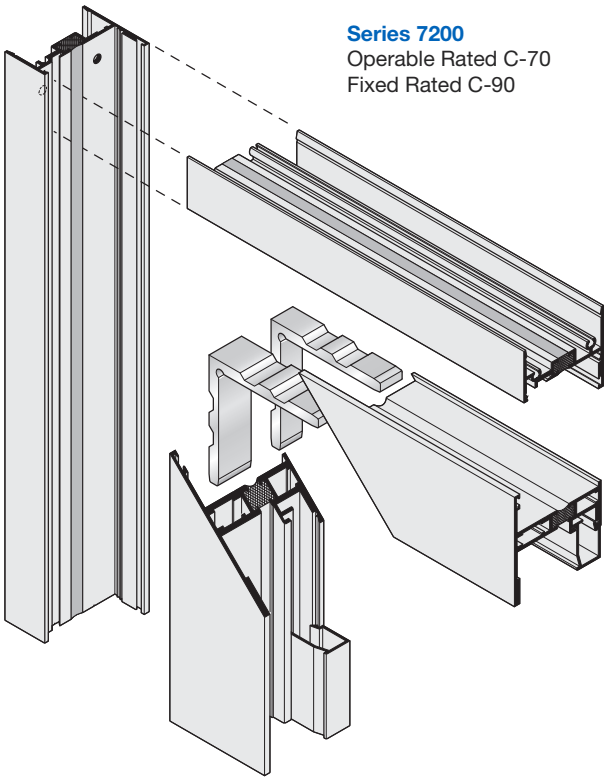

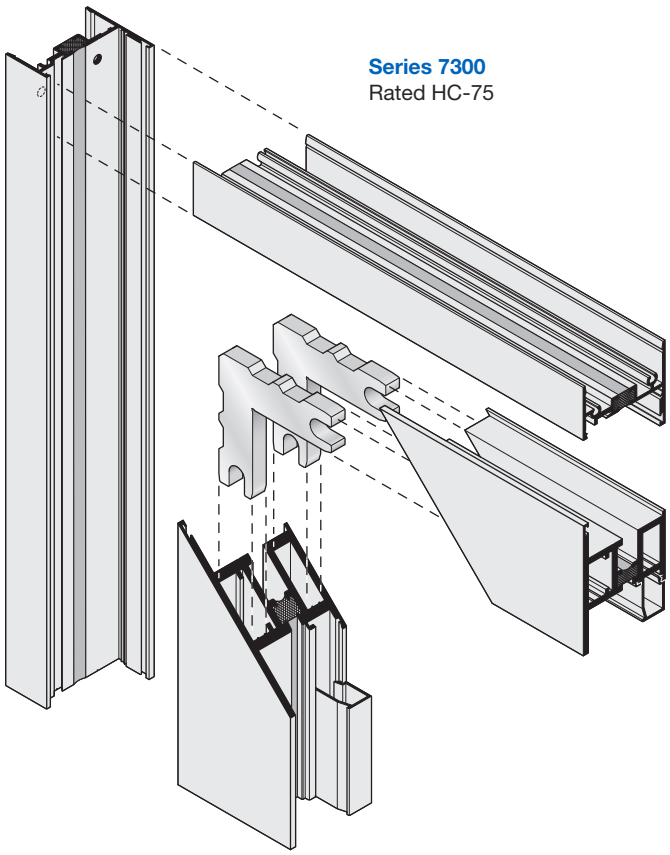

All window units are to be dry glazed with tape at the outside and E.P.D.M. elastomeric wedge at the inside. Vent construction is accomplished with tubular members, mitered and reinforced with an extruded aluminum corner key, and hydraulically crimped. Operating hardware options include 90° 4-bar Hinges, five knuckle butt hinges, roto operators, friction adjusters, and limit device arms. Locking hardware options include cam locking handles, two point locking handles, and security locks.

WINDOWS

Typical Details

FOR 1" (25) GLAZING

Operable and Fixed Windows

- Series 7200
- Series 7300

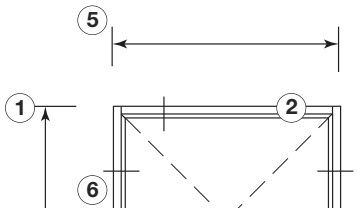

PROJECT-IN TYPICAL ELEVATION

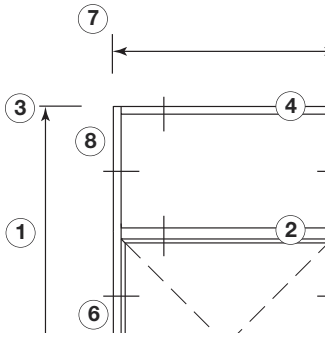

FIXED LITE PROJECT-IN TYPICAL ELEVATION

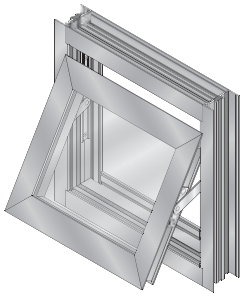

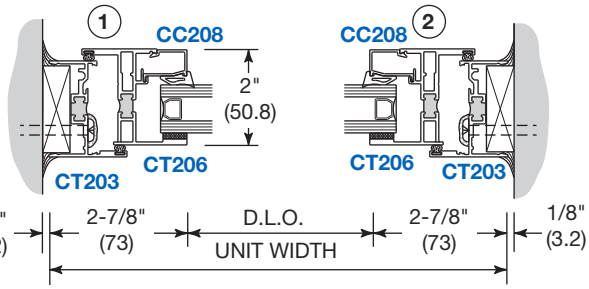

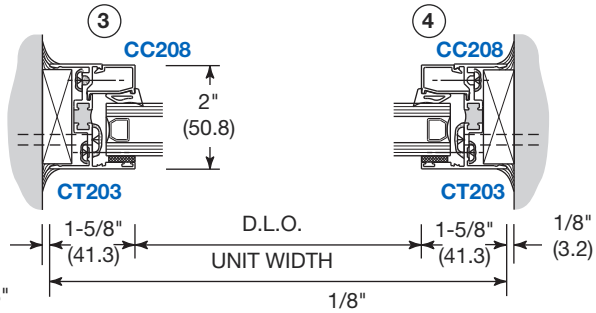

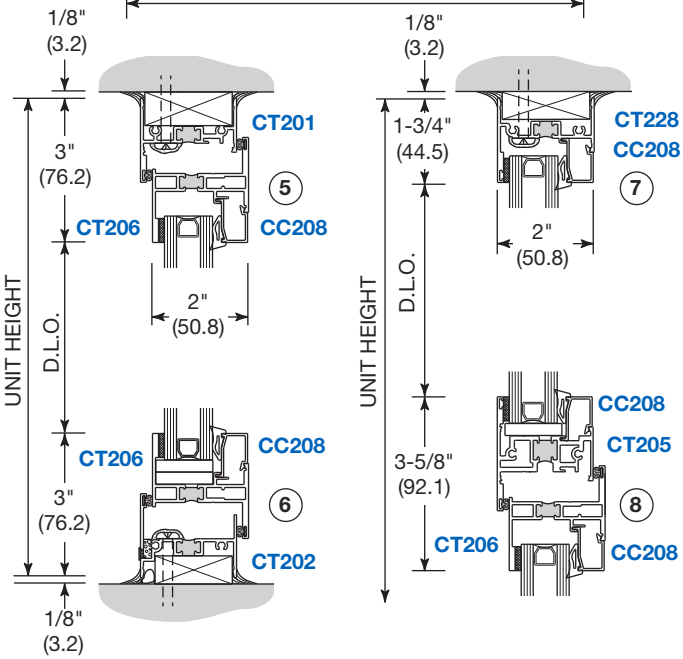

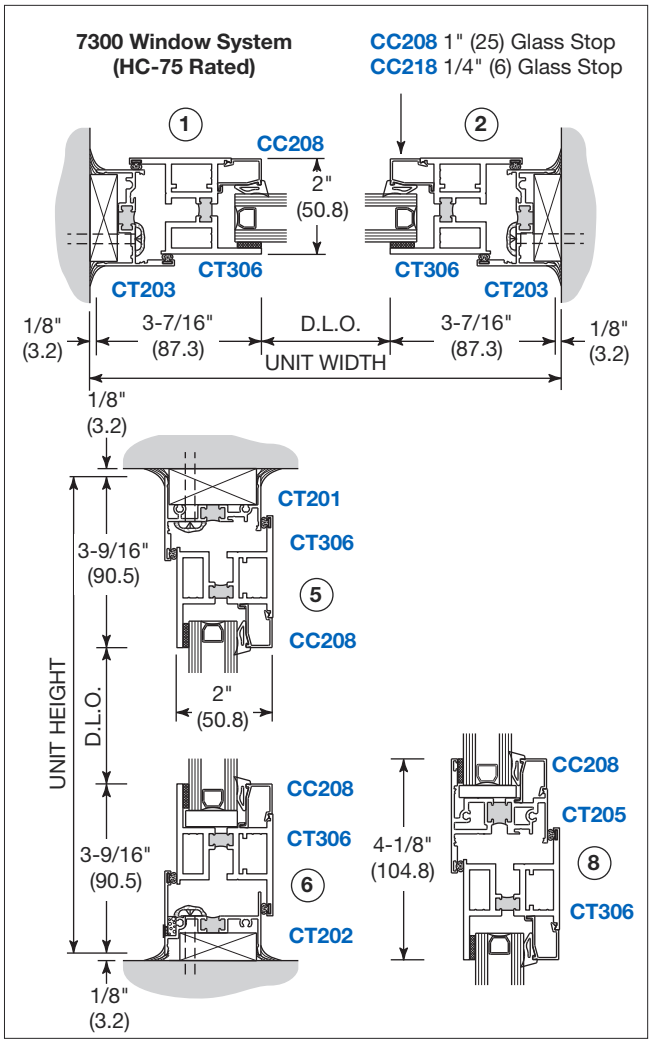

NOT TO SCALE

WINDOWS

Typical Details

Operable and Fixed Windows
- Series 7200
- Series 7300

FOR 1" (25) GLAZING

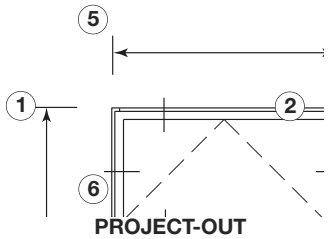

PROJECT-OUT
TYPICAL ELEVATION

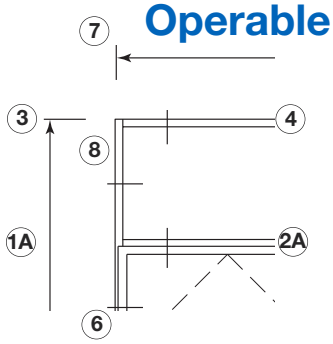

FIXED LITE PROJECT-OUT
TYPICAL ELEVATION

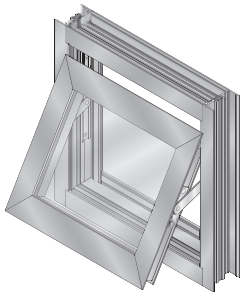

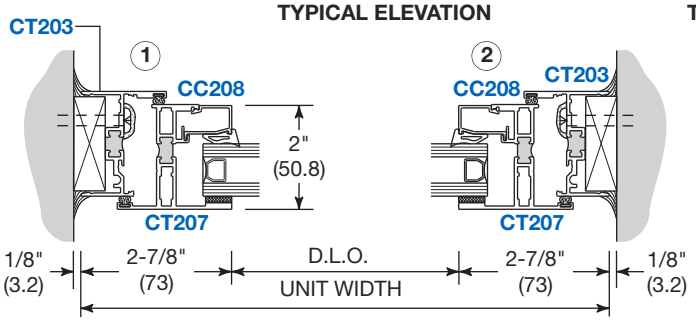

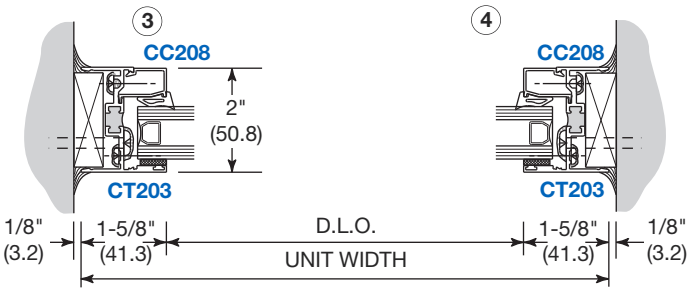

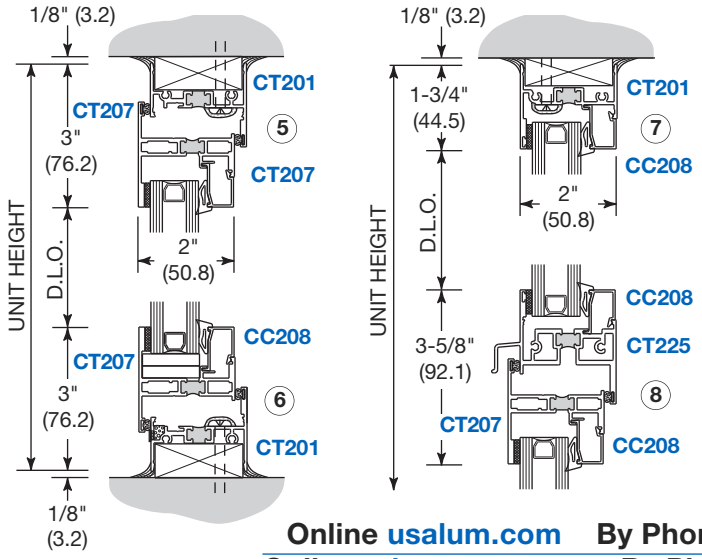

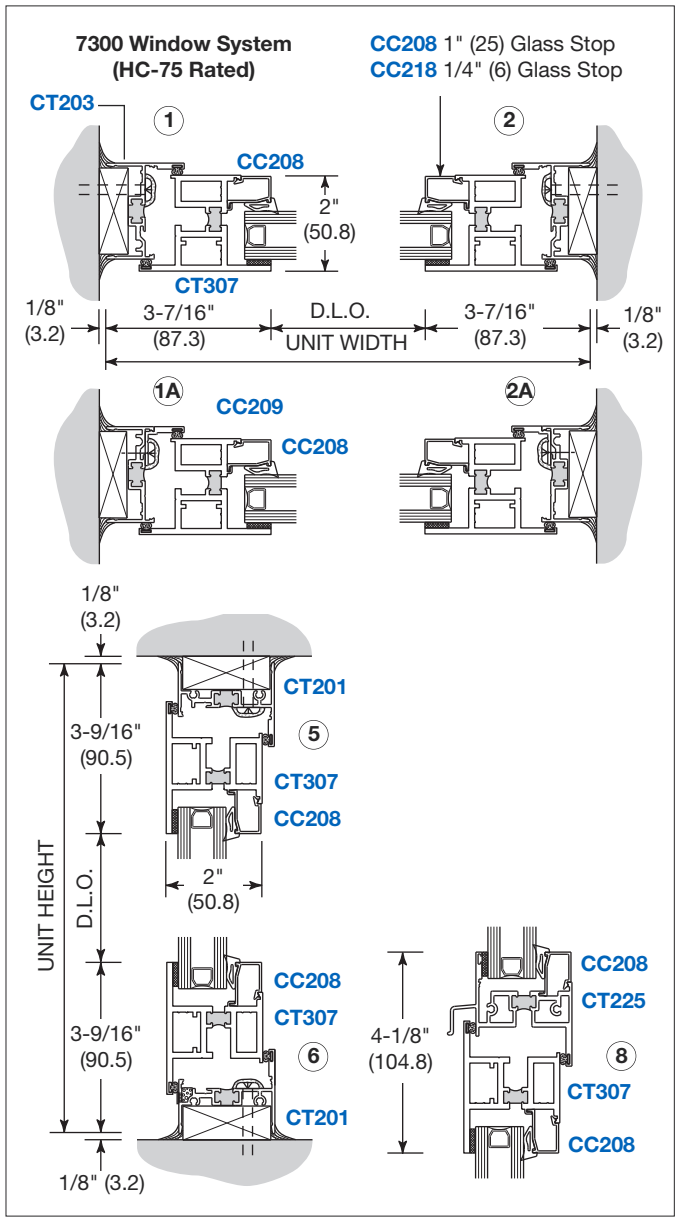

NOT TO SCALE

WINDOWS

Typical Details

FOR 1" (25) GLAZING

Operable and Fixed Windows
- Series 7200
- Series 7300

Series 7200 Shown With Series 3250 Curtain Wall.
For Series 7300 Sash Details, See Pages 05-L1 and 06-L1.

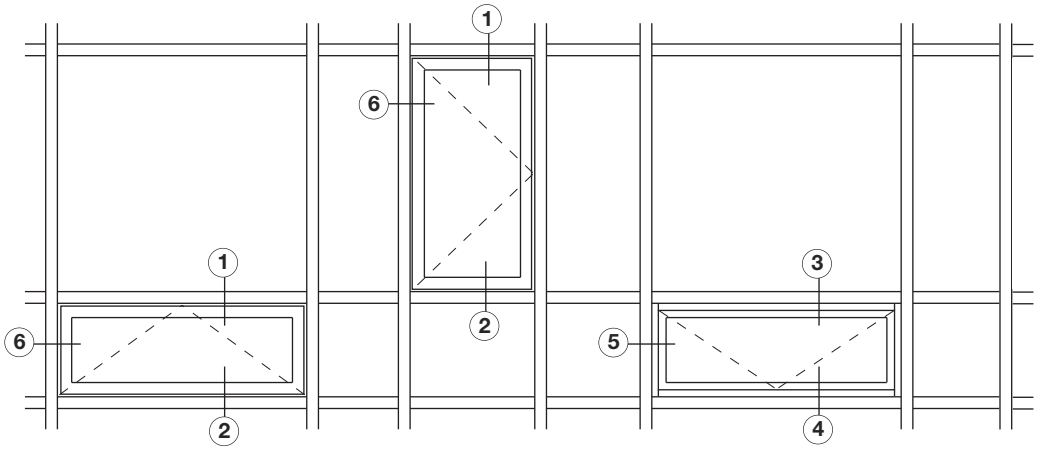

TYPICAL ELEVATION

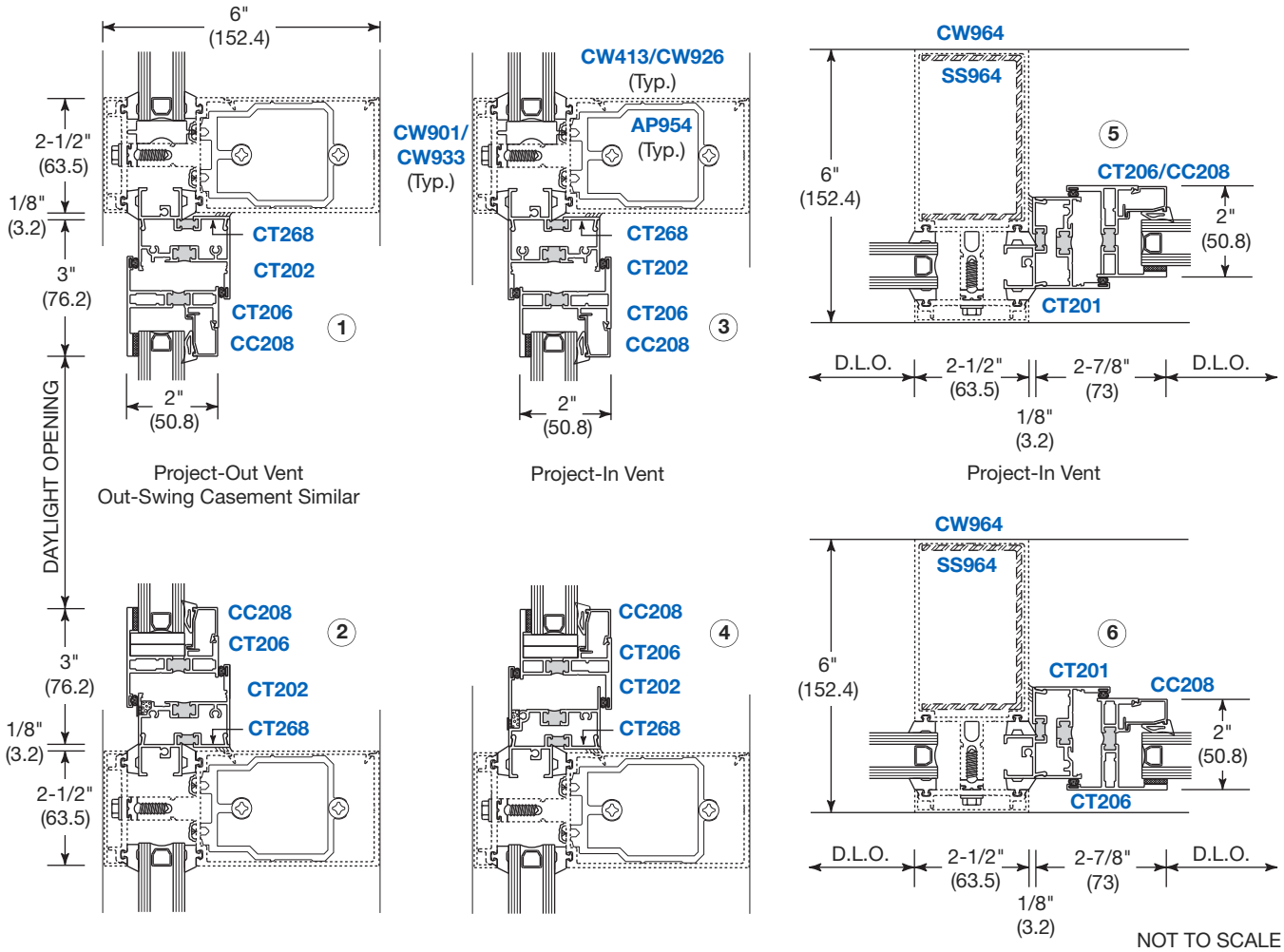

NOT TO SCALE

WINDOWS

Optional Accessories

Operable and Fixed Windows
- Series 7200
- Series 7300

FOR 1/4" (6) AND 1" (25) GLAZING

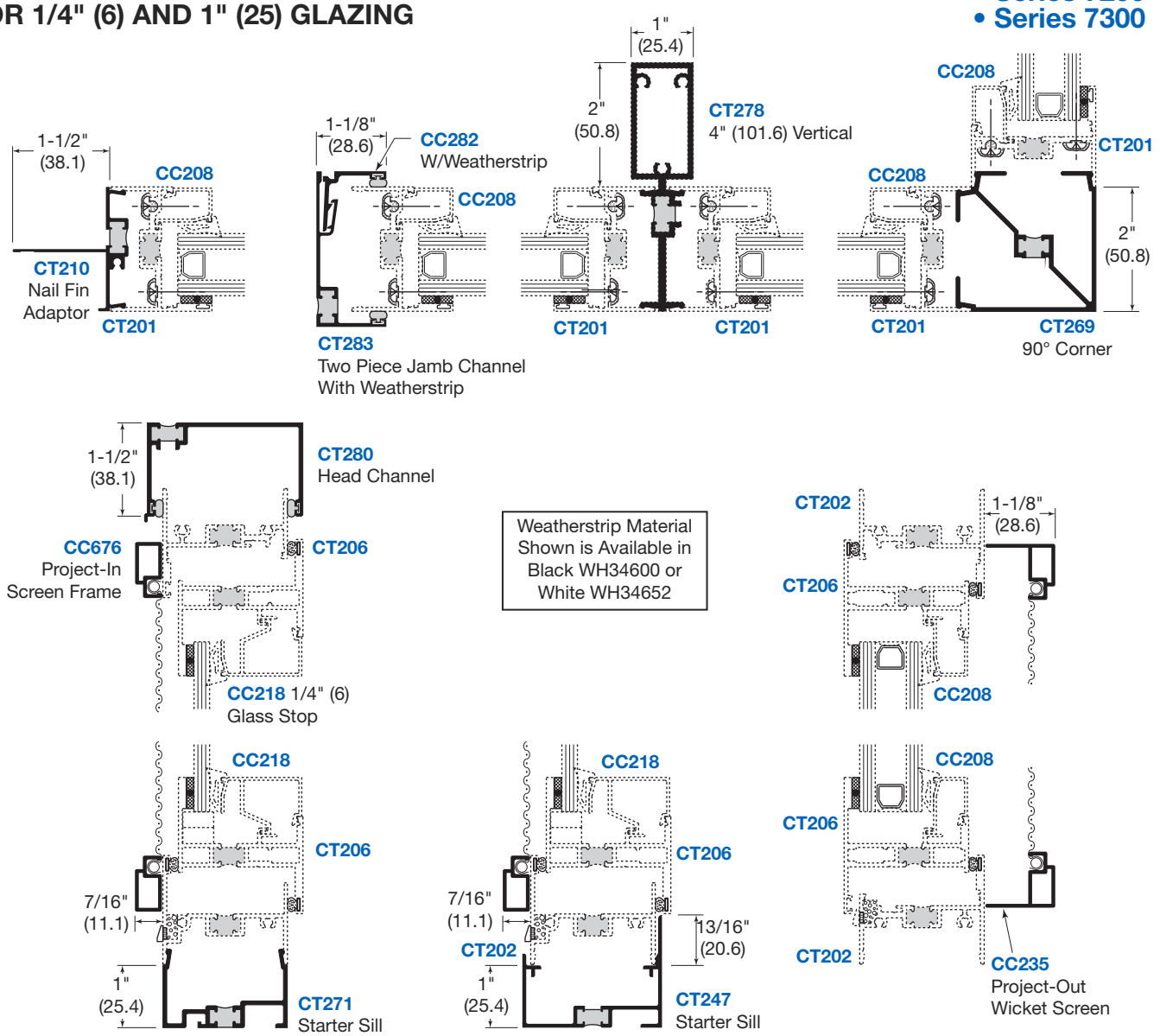

NOT TO SCALE

CRL U.S. ALUMINUM

WINDOWS

Hardware

Operable and Fixed Windows
- Series 7200
- Series 7300

* Must specify window size when ordering.

HARDWARE	PART NO.	DESCRIPTION	PKG. QTY.	PROJECT-IN VENT	PROJECT-OUT VENT	OUT-SWING CASEMENT
OPERATING HARDWARE	WH616*	Stainless Steel 4-Bar Hinges	1	●	●	●
	WH658*	Stainless Steel 90° 4-Bar Hinges	1			○
	WH738	5 Knuckle Butt Hinges	1			○
	WH300*	Roto Operators	1		○	○
	WH645	Limit Device	1	○	○	○
	WH646	Friction Adjuster	1	○	○	○
LOCKING HARDWARE	WH240	Cam Handle Lock	1		●	●
	WH412	Lift Handle Lock	1	●	○	○
	WH023	Access Control Key Lock	1	○	○	○

● **STANDARD**
○ **OPTIONAL**

NOTE: Roto Operators Require Butt Hinges.
Butt Hinges Without Roto Operator Requires Friction Hold Open Hardware.

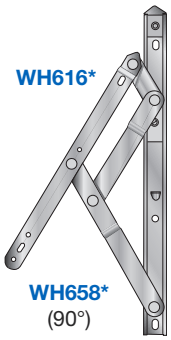

4-Bar Hinge

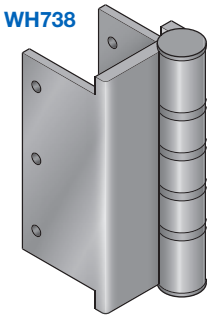

5-Knuckle Butt Hinge

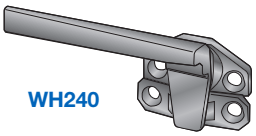

Cam Handle Lock

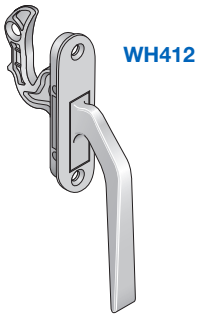

Lift Handle Lock

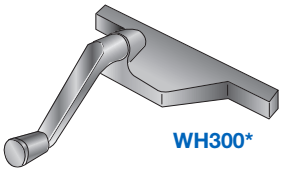

Roto Operator

Glass Size Formulas

Glass Size formulas are for single window configurations.

7200 Fixed Windows:	7200 Operable Windows:	7300 Operable Windows:
Glass Height = Frame Height Minus 2-1/2" (63.5)	Glass Height = Frame Height Minus 5" (127)	Glass Height = Frame Height Minus 6-1/8" (155.6)
Glass Width = Frame Width Minus 2-1/4" (57.2)	Glass Width = Frame Width Minus 4-3/4" (120.7)	Glass Width = Frame Width Minus 5-7/8" (149.2)

NOTE: When utilizing subsills, subtract 1/2" (12.7) for CC281 and subtract 1" (25) for CC271 to the calculated glass height sizes.

Glass Size formula for multiple configurations is D.L.O. + 1" (25). This formula can be used for all glass openings.

MAXIMUM SIZE LIMITATIONS

7200 Windows (C Rating)
Fixed = 72" (1829) wide X 72" (1829) high
Casement = 30" (762) wide X 60" (1524) high
Project-in = 60" (1524) wide X 32" (813) high
Project-out = 60" (1524) wide X 32" (813) high

7300 Windows (HC Rating)
Fixed = 72" (1829) wide X 72" (1829) high
Casement = 30" (762) wide X 60" (1524) high
Project-in = 60" (1524) wide X 32" (813) high
Project-out = 60" (1524) wide X 32" (813) high

MINIMUM FRAME DIMENSION WITH SASH

7200 Windows
15" (381) wide X 15" (381) high

7300 Windows
16" (406) wide X 16" (406) high

WINDOWS

Table of Contents

Operable and Fixed Windows
• Series 7400

SECTION L2 PAGE

SPECIFICATIONS ....02-L2 and 03-L2
SPECIAL FEATURES AND GLASS SIZE FORMULAS 04-L2
HARDWARE ....05-L2 and 06-L2
TYPICAL DETAILS FIXED WINDOW, 1" (25) GLASS 07-L2
TYPICAL DETAILS IN-SWING CASEMENT, 1" (25) GLASS....08-L2
TYPICAL DETAILS OUT-SWING CASEMENT, 1" (25) GLASS 09-L2
OPTIONAL ACCESSORIES 10-L2

Project: 400 Orleans, Chicago, IL

Due to the diversity in state/provincial, local, and federal laws and codes that govern the design and application of architectural products, it is the responsibility of the individual architect, owner, and installer to ensure that products selected for use on projects comply with all applicable building codes and laws. U.S. Aluminum exercises no control over the use or application of its products, glazing materials, and operating hardware, and assumes no responsibility thereof.

The rapidly changing technology within the architectural aluminum products industry demands that U.S. Aluminum reserve the right to revise, discontinue or change any product line, specification or electronic media without prior written notice.

NOTE: Dimensions in parentheses ( ) are millimeters unless otherwise noted.
Other metric units shown in this publication are:

m - meter	Kg - kilogram
Pa - pascal	KPa - kilopascal
MPa - megapascal	

CRL U.S. ALUMINUM

WINDOWS

Specifications

Operable and Fixed Windows • Series 7400

SECTION 08 51 13 ALUMINUM WINDOWS

Drawings and specifications are based on the Series 7400 Thermal AW75 Windows as manufactured by U.S. Aluminum. Whenever substitute products are to be considered, supporting technical literature, samples, drawings, and performance data must be submitted 10 days prior to bid in order to make a valid comparison of the products involved. Test reports certified by an independent test laboratory must be made available upon request.

PART 1 GENERAL

1.01 Work Included

A. Furnish and install aluminum architectural windows complete with hardware and related components as shown on drawings and specified in this section.

Specify glass and glazing in this section if window assemblies are to be glazed by the window manufacturer. If glazing is to be done by a different contractor, glass and glazing should be specified in Section 08 80 00.

B. Glass and Glazing
1. All units shall be factory glazed.

OR

1. Reference Section 08 80 00 for Glass and Glazing.

List work and materials related to this section but specified in other sections.

1.02 Related Work

Section 08 40 00 - Entrances and Storefronts
Section 08 44 00 - Glazed Curtain Walls
Section 08 44 33 - Slope Glazing Systems
Section 08 50 00 - Replacement Windows

1.03 Testing and Performance Requirements

A. Test Units
1. Air, water, and structural test unit shall conform to requirements set forth in ANSI/AAMA/NWWDA 101 I.S. 2-97 and AAMA 910-93.
2. Thermal test unit sizes shall be 36" (914) x 60" (1524). Unit shall consist of a casement, fixed or projected window.

B. Test Procedures and Performances
1. **Standards:** Windows shall conform to all AAMA/ ANSI/NWWDA-101 I.S.2-97 and AAMA 910-93 requirements for the window type referenced in 1.01.B.
2. **Air Infiltration Test:** With ventilators closed and locked, test unit in accordance with ASTM E 283-91 at a static air pressure difference of 6.24 psf. Air infiltration shall not exceed .10 cfm per foot of crack.
3. **Water Resistance Test:** With ventilators closed and locked, test unit in accordance with ASTM E 331-96/ASTM E 547 at a static air pressure difference of 12 psf. There shall be no uncontrolled water leakage.
4. **Uniform Load Deflection Test:** With ventilators closed and locked, test unit in accordance with ASTM E 330-97 at a static air pressure difference of 112.5 psf positive and negative pressure. No member shall deflect over L/175 of its span.
5. **Condensation Resistance Test (CRF):** With ventilators closed and locked, test unit in accordance with AAMA 1503. Condensation Resistance Factor (CRF) shall not be less than 49.
6. **Thermal Transmittance Test (Conductive U-Value):** With ventilators closed and locked, test unit in accordance with NFRC-100 and AAMA 1503. Conductive thermal transmittance (U-Value) shall not be more than 0.63
7. **AAMA Testing Procedures:**
   a. AW75 Series 7400 Operable and Fixed Windows Test Procedures:
   AAMA/WDMA/CSA 101/I.S.2/ A 440-08 - Laboratory performance testing.
   AAMA 502-08 - Newly installed fenestration products.
   AAMA 511-08 - Installed fenestration products after 6 months.

1.04 Quality Assurance

A. Provide test reports from AAMA accredited laboratories certifying the performance as specified in 1.05.

B. Test reports shall be accompanied by the window manufacturer's letter of certification, stating the tested window meets or exceeds the referenced criteria for the appropriate AAMA/NWWDA 101/I.S.2-97 and AAMA 910-93 window type.

1.05 Submittals

A. Contractor shall submit shop drawings, finish samples, test reports, and warranties.

1.06 Warranties

A. Total Window System
1. The responsible contractor shall assume full responsibility and warrant for one year the satisfactory performance of the total window installation which includes that of the windows, hardware, glass (including insulating units), glazing, anchorage and setting system, sealing, flashing, etc., as it relates to air, water, and structural adequacy as called for in the specifications and approved shop drawings.
2. Any deficiencies due to such elements not meeting the specifications shall be corrected by the responsible contractor at his expense during the warranty period.

WINDOWS

Specifications

Operable and Fixed Windows • Series 7400

SECTION 08 51 13 ALUMINUM WINDOWS

PART 2 PRODUCTS

2.01 Materials

A. Aluminum - Extruded aluminum shall be 6063-T5 alloy and tempered.

B. Hardware - Locking handles shall be cam type as supplied by U.S. Aluminum. Operating hardware shall be 4-bar stainless steel arms or equal.

C. Weatherstrip - All weatherstrip shall be E.P.D.M. or equal.

D. Thermal Barrier - All exterior aluminum shall be separated from interior aluminum by a rigid, structural thermal barrier. For purposes of this specification, a structural thermal barrier is defined as a system that shall transfer shear during bending and, therefore, promote composite action between the exterior and interior extrusions. The thermal barrier shall be INSULBAR® by ENSINGER, INC. or equal, consisting of two glass reinforced polyamide nylon 6/6 struts, mechanically crimped in raceways in exterior and interior extrusions. Poured and debridged urethane thermal barriers shall not be permitted.

E. Glass

1. Insulating glass shall be ( ) as manufactured by ( ) consisting of ( ) exterior, ( ) air spacer, and ( ) interior.

OR

1. Glass shall be 3/16" (5) or 1/4" (6) monolithic tempered.

2.02 Fabrication

A. General

1. All primary aluminum frame and vent extrusions shall have a minimum wall thickness of .125" (3.2).
2. Mechanical fasteners, welded components, and hardware items shall not bridge thermal barriers. Thermal barriers shall align at all frame and vent corners.
3. Depth of frame and vent shall not be less than 2-1/4" (57.2).
4. All frame and vent members shall be able to accommodate separate interior and exterior finishes and colors.

B. Frame - Frame components shall be mechanically fastened.

C. Ventilator

1. All vent extrusions shall be tubular.
2. Each corner shall be mitered, reinforced with an extruded corner key, and hydraulically crimped.
3. Each vent shall be pressure equalized utilizing two rows of weatherstripping (or equal) installed in dovetail grooves in the extrusion.
4. The vent shall present a flush appearance with the exterior and interior of the main frame when in the closed position.

D. Muntins - Muntins shall be factory attached (non-removable), exterior grid designed to match vent sight line (if applicable).

E. Screens

1. Screen frames shall be extruded.
2. Screen mounting holes in the window frame shall be factory drilled.
3. Screen mesh shall be aluminum or fiberglass.

F. Glazing - All units shall be glazed with butyl tape, silicone cap seal, and extruded snap-in aluminum glazing bead, with E.P.D.M. gasket.

G. Finish - Windows are capable of having separate interior and exterior finishes and/or colors.

1. Anodic
   a. Finish all exposed areas of aluminum windows and components with electrolytically deposited color in accordance with Aluminum Association Designation AA-M10-C22-( ). Color shall be ( ). Available colors are clear, bronze, and black.
2. Paint
   a. A Fluoropolymer paint coating conforming with the requirements of AAMA 2605. Color shall be *(Specify a U.S. Aluminum standard color)*.

PART 3 EXECUTION

3.01 Inspection

A. Job Conditions - Verify that openings are dimensionally within allowable tolerances, plumb, level, clean, provide a solid anchoring surface, and are in accordance with approved shop drawings.

3.02 Installation

A. Use only skilled tradesmen with work done in accordance with approved shop drawings and specifications.

B. Plumb and align window faces in a single plane for each wall plane, and erect windows and materials square and true. Adequately anchor to maintain positions permanently when subjected to normal thermal movement, specified building movement, and specified windloads.

C. Adjust windows for proper operation after installation.

D. Furnish and apply sealants to provide a weather tight installation at all joints and intersections and at opening perimeters.

3.03 Protection and Cleaning

A. After completion of window installation, windows shall be inspected, adjusted, put into working order and left clean, free of labels, dirt, etc. Protection from this point shall be the responsibility of the general contractor.

WINDOWS

Special Features

Operable and Fixed Windows
• Series 7400

The Series 7400 is a 2-1/4" (57.2) Operable Window tested to meet or exceed ANSI/AAMA/NWWDA-1011.5 2-97 requirements. The 7400 Window is constructed using extruded tubular members mitered and crimped with corner keys. These windows are offered in projected, casement, and fixed configurations. Series 7400 also features the Insulbar® by Ensinger, Inc. Thermal Break design to provide maximum thermal properties.

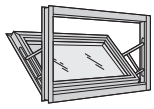

Project-In

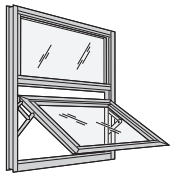

Project-Out

In-Swing Casement

Out-Swing Casement

Projected and casement windows operate by moving away, or "projecting," from the window frame, as awning or hopper vents, and as in-swinging or out-swinging casement vents. Projected windows open and close horizontally while casement windows operate on a vertical axis.

Insulbar® is a registered trademark of Ensinger, Inc.

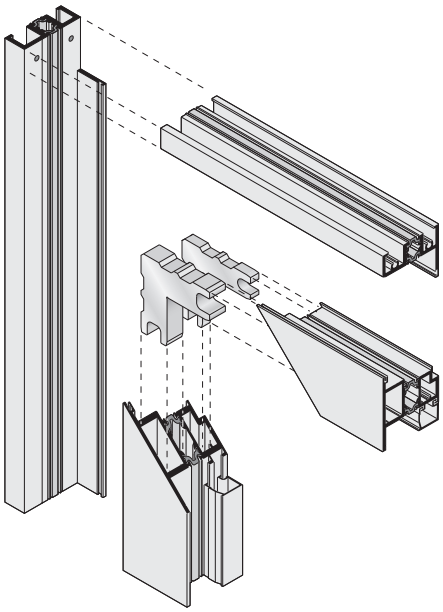

Typical Corner Construction

Glass Size Formulas

Glass Sizes for Single Operable Units = Frame Size Minus 6" (152.4) Vertically and Horizontally.
Glass Sizes for Single Fixed Units = Frame Size Minus 2-5/8" (66.7) Vertically and Horizontally.
Glass Sizes for All Multi-Light Units = DLO plus 1" (25.4) Vertically and Horizontally (Good for Any Series 7400 Glass Sizing)

Size Limitations

Architectural Windows
Design Pressure = 40 psf
Structural = 60 psf
Water = 8.0 psf

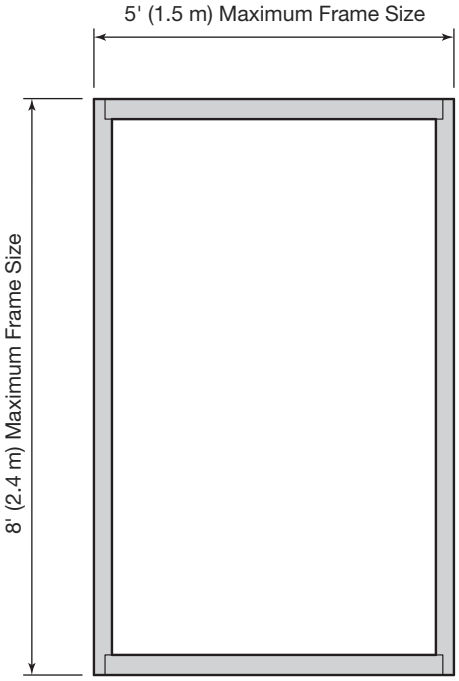

Fixed

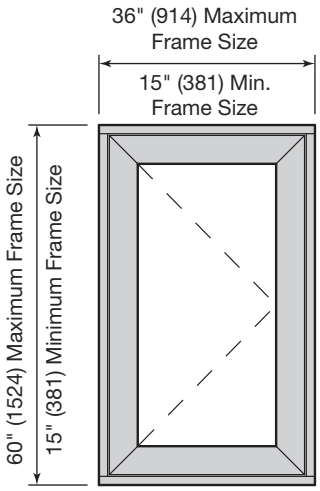

Casements

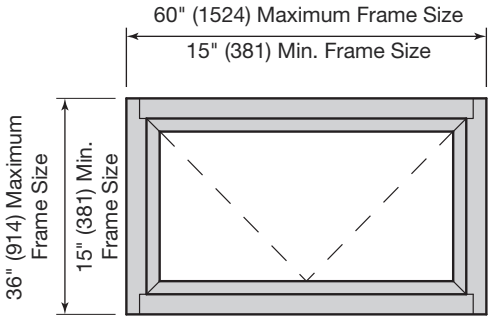

Project-In

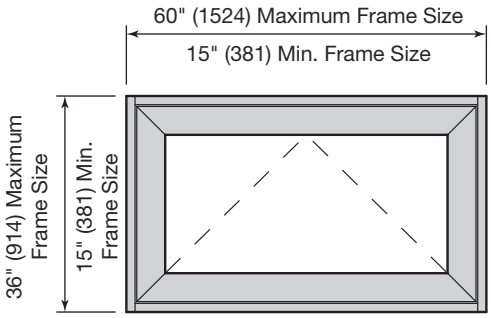

Project-Out

WINDOWS

Hardware

Operable Windows • Series 7400

* Must specify window size when ordering.

HARDWARE	PART NO.	DESCRIPTION	PKG QTY.	PROJECT-IN VENT	PROJECT-OUT VENT	IN-SWING CASEMENT	OUT-SWING CASEMENT
OPERATING HARDWARE	WH616*	Stainless Steel 4-Bar Hinges	1	●	●	●	●
	WH658*	Stainless Steel 90° 4-Bar Hinges	1			○	○
	WH748	5 Knuckle Butt Hinges	1			○	○
	WH656	High Performance Concealed Casement Hinge	1			○	○
	WH300*	Roto Operators	1		○		○
	WH645	Limit Device	1	○	○	○	○
	WH646	Friction Adjuster	1	○	○	○	○
LOCKING HARDWARE	WH240	Cam Handle Lock	1	●	●	●	○
	WH412	Lift Handle Lock	1		○		●
	WH023	Access Control Key Lock	1	○	○	○	○
	WH124*	Multi-Point Locking System	1				○

● **STANDARD** Standard Finish Supplied on Roto Operator, Cam Handle, and Lever Handle Hardware is White Bronze Unless Specified Otherwise.

○ **OPTIONAL** Consult Factory for Other Hardware Types and Finishes to Meet Project Requirements.

NOTE: Roto Operators Require Butt Hinges.
Butt Hinges Without Roto Operator Requires Friction Hold Open Hardware.

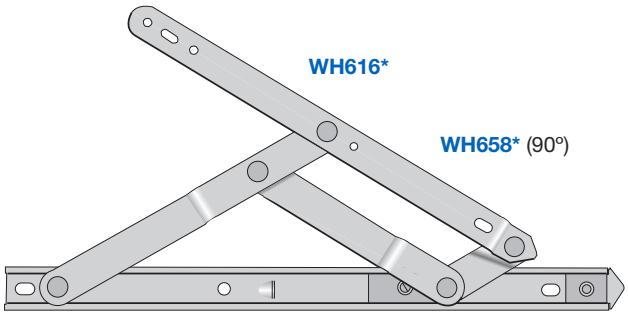

Stainless Steel 4-Bar Hinge

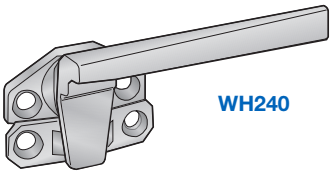

Cam Handle Lock

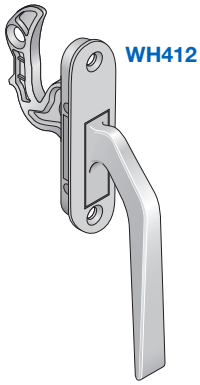

Lift Handle Lock

See page 06-L2 for additional information on Window Hardware

CRL U.S. ALUMINUM

WINDOWS

Hardware

* Must specify window size when ordering.

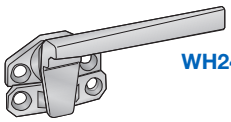

WH240

Cam Handle Lock (project-out windows) This lock is designed to have a long, trouble free life. The two-piece strike includes a polyester insert for smooth operation. Pole Operated Handle available for elevated window locations.

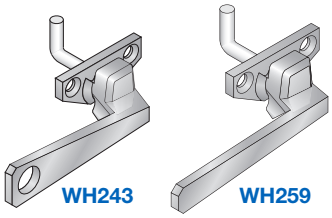

WH243 WH259

Cam Handle Locks (project-in windows) This concealed pawl design provides internal lock-up of in-swinging windows. **WH243** with optional Pole Operated Handle for elevated window locations.

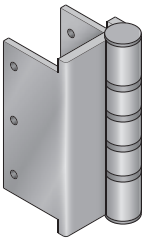

WH748

5 Knuckle Butt Hinge
This is a heavy-duty butt hinge for use with casement window applications.

WH412

Lift Handle Lock
This locking handle is designed with a slight taper to it's nose to help improve keeper engagement, and to produce a smoother locking action. A strong detent in both open and closed positions creates a solid and secure feel. These cam handles are rear mounted with no exposed screws.

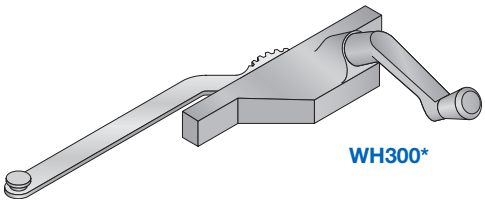

WH300*

Single Arm Roto Operator
This operator provides arm movement for 90˚ of the window opening. The operator has a high pressure, die cast zinc crank handle and knob, and hardened steel worm gear and gear arm. Butt hinges must be used with this operator.

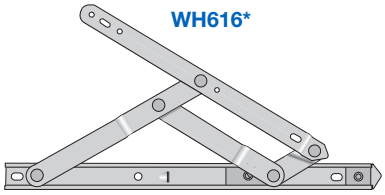

WH616*

Stainless Steel 4-Bar Hinges
These non-handed 4-bar hinges are specially designed for casement, awning and projected vents. This hinge has a stainless steel support arm, guide bracket and cap, and sliding brass shoe.

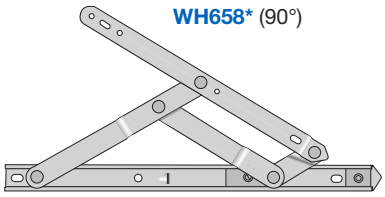

WH658* (90°)

Stainless Steel 90° 4-Bar Hinge
Hinges are designed for casement window applications and provide 90˚ of opening. When in the fully opened position, an average sized person can escape through the opening in case of an emergency as required by egress codes.

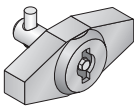

WH023

Tamper Resistant Key Lock
This spring-loaded lock design provides tamper-resistant lock-up of windows. A key slot in the housing requires a special key to operate the lock.

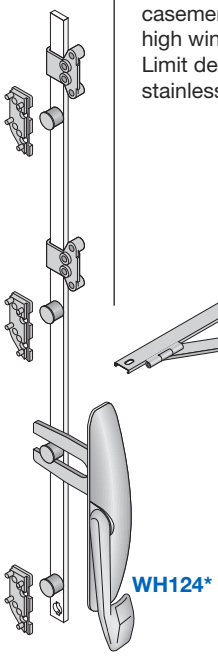

WH124*

Multi-Point Locking System
This lock has self-locating snap-on tie bar guides with "feet" protruding from within, that automatically index the tie bar the correct distance from the frame. The progressive locking action guarantees positive sequential locking of window.

Operable Windows
• Series 7400

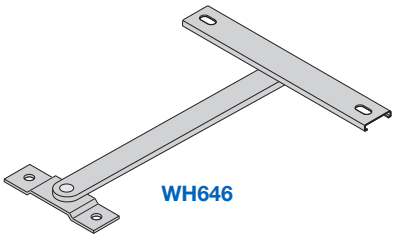

WH646

Friction Adjuster
By tightening a screw in the sliding brass shoe, an operator can easily adjust the tension required to open and close the window. This friction adjuster is made of stainless steel with nylon friction block encased in a sliding brass shoe.

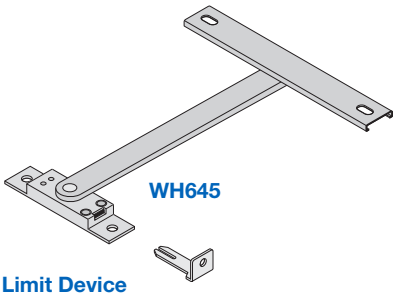

WH645

Limit Device
Limit devices help prevent damage to casement and awning windows under high winds in high rise applications. Limit devices are plated steel arms with stainless steel track and detach clip.

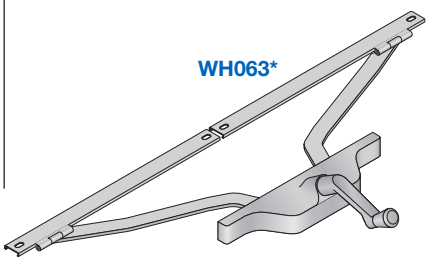

WH063*

Pivot Shoe Roto Operator
Designed for face mounted applications on single vent awning windows, this operator's unique pivot shoe design allows approximately 10" (254) of opening. Acetal pivot shoes slide smoothly in the track assuring positive operation and creating a self cleaning action.

L

WINDOWS

Typical Details

FOR 1" (25) GLAZING

Fixed Windows
• Series 7400

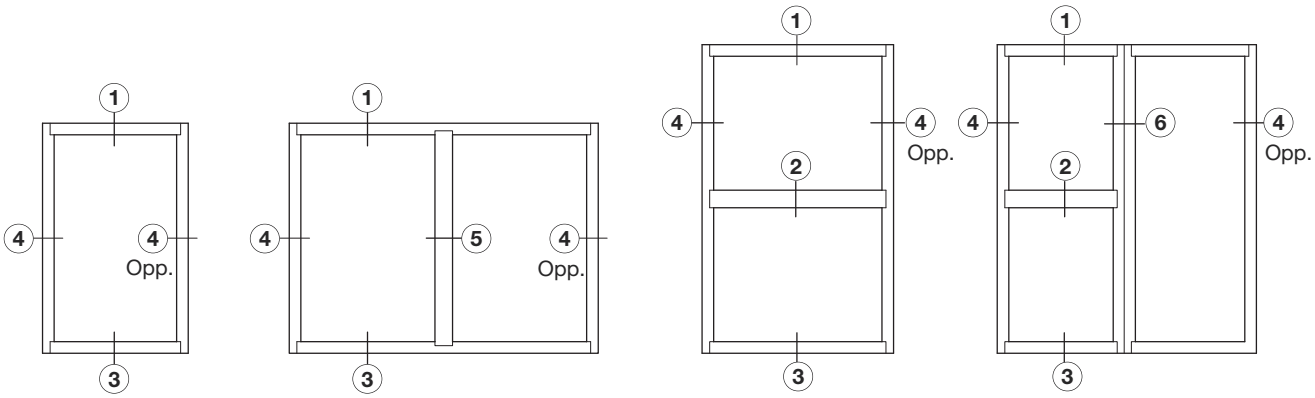

FIXED WINDOW
TYPICAL ELEVATIONS

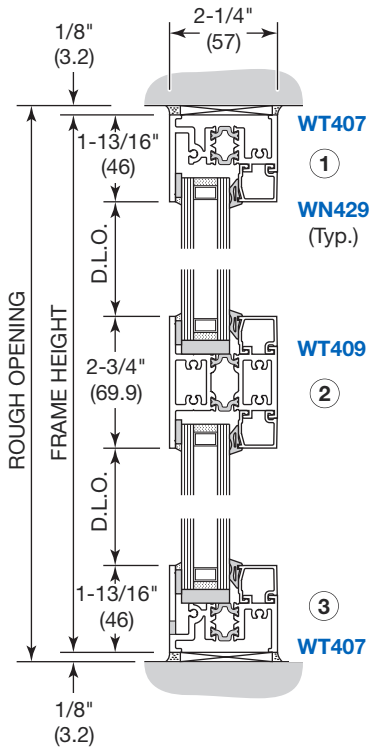

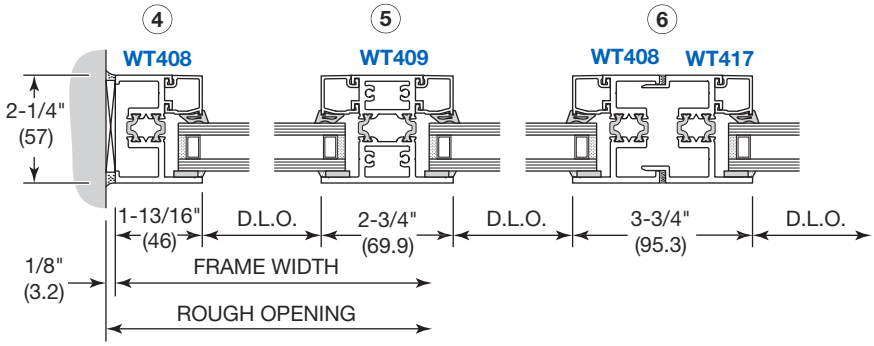

NOT TO SCALE

CRL U.S. ALUMINUM

WINDOWS

Typical Details

FOR 1" (25) GLAZING

Operable Windows
• Series 7400

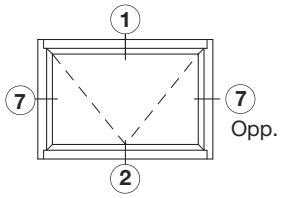

PROJECT-IN
TYPICAL ELEVATIONS

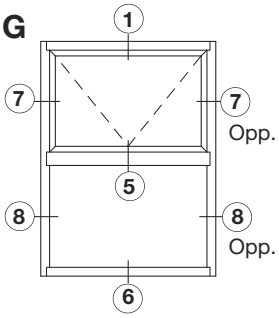

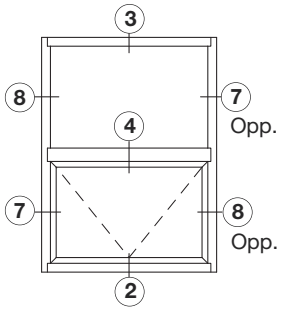

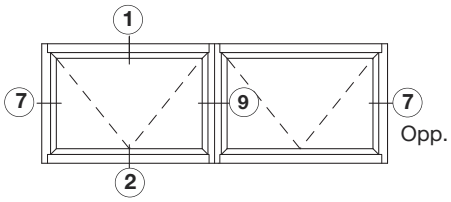

IN-SWING CASEMENT
TYPICAL ELEVATIONS

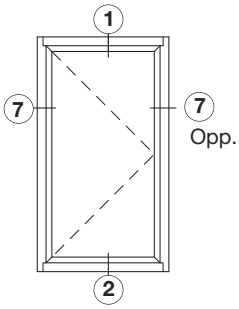

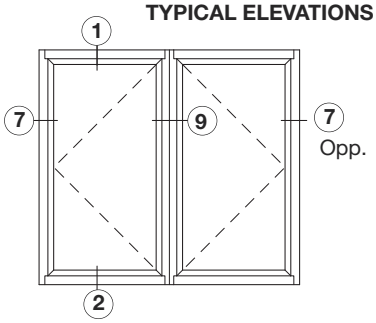

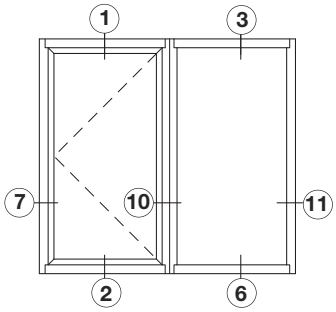

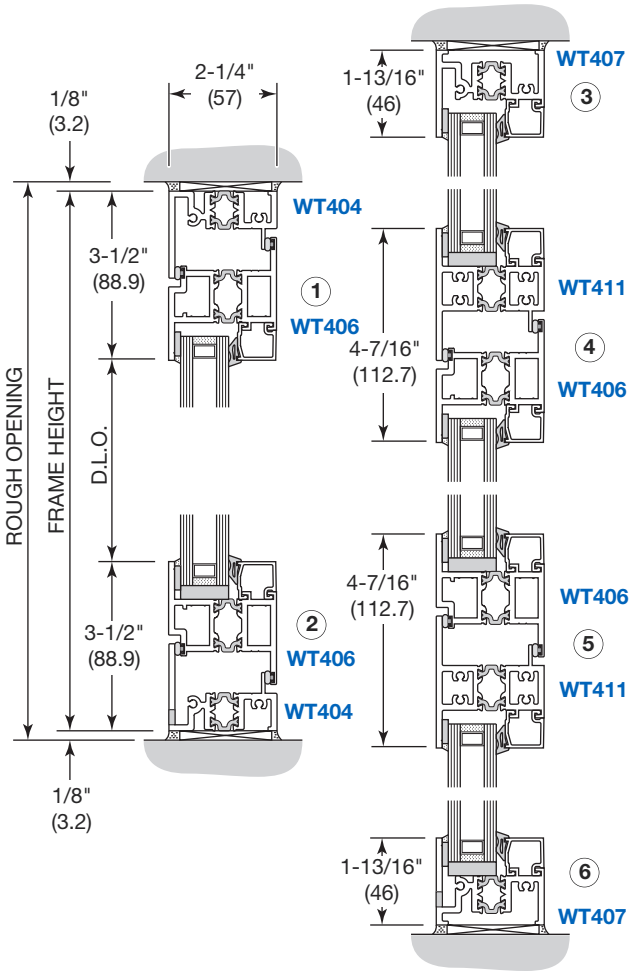

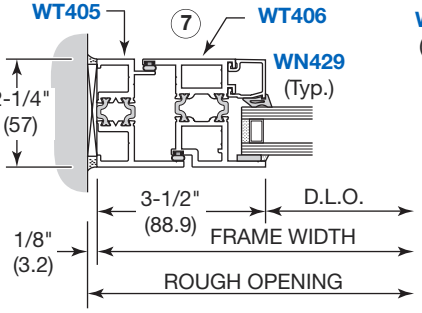

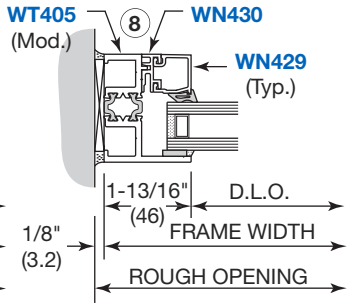

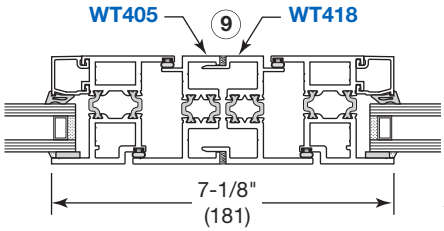

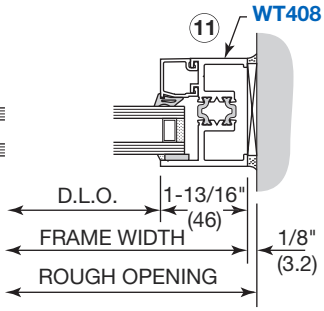

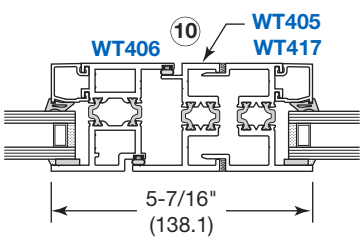

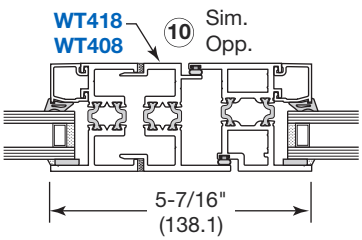

NOT TO SCALE

WINDOWS

Typical Details

FOR 1" (25) GLAZING

Operable Windows • Series 7400

PROJECT-OUT TYPICAL ELEVATIONS

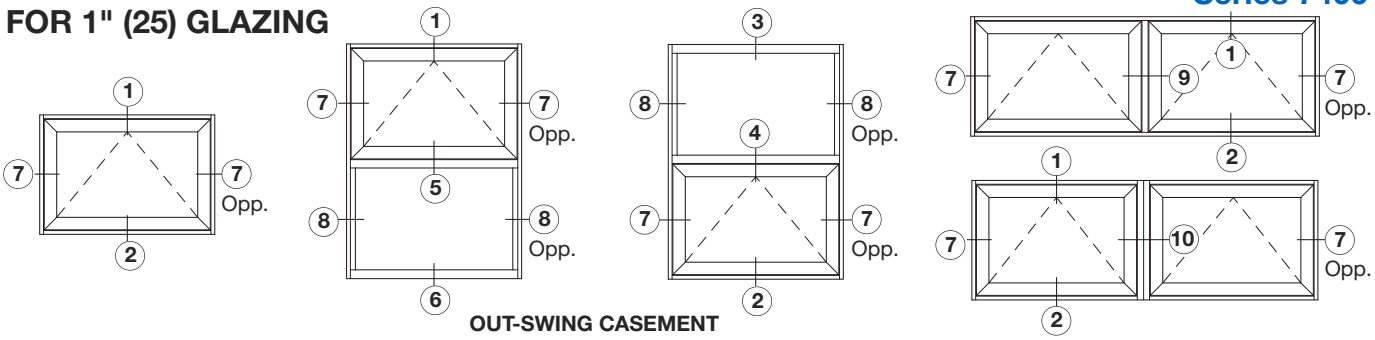

OUT-SWING CASEMENT TYPICAL ELEVATIONS

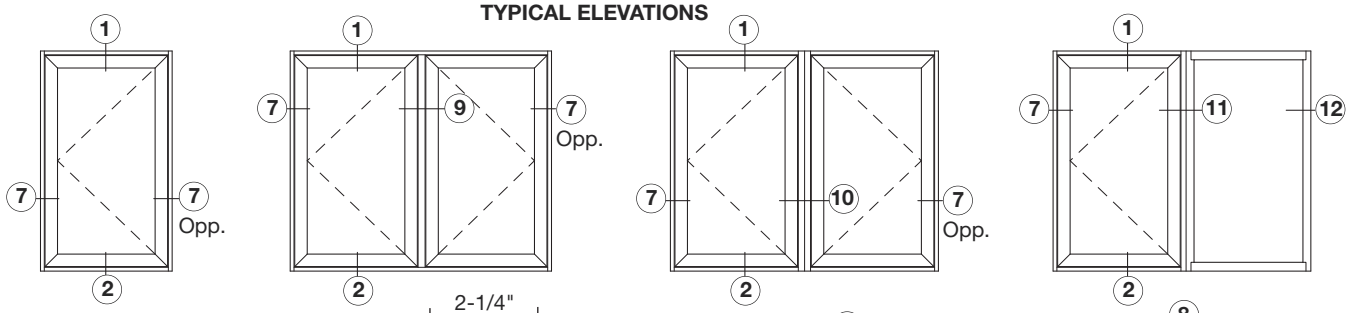

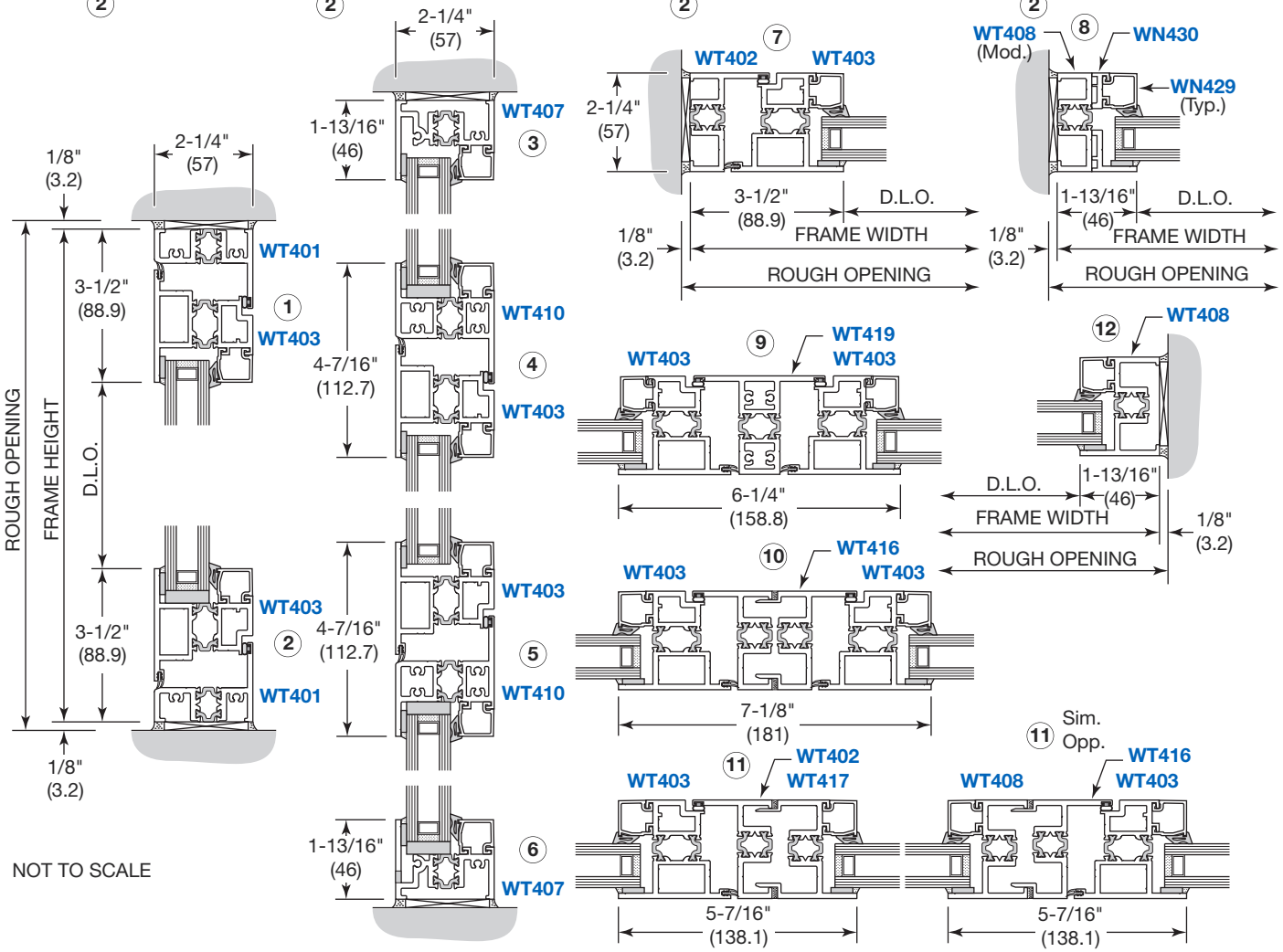

WINDOWS

Optional Accessories

FOR 1" (25) GLAZING

Operable Windows
• Series 7400

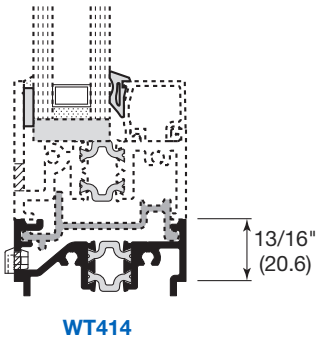

Starter Sills

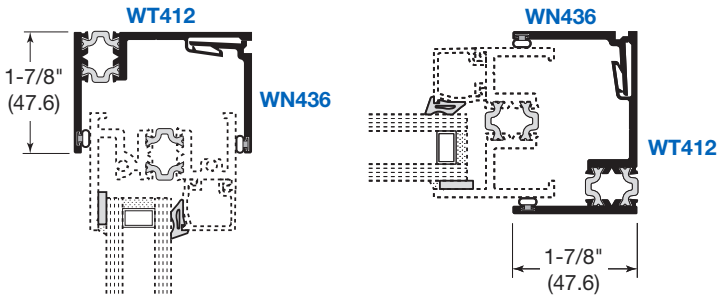

Compensation Channels

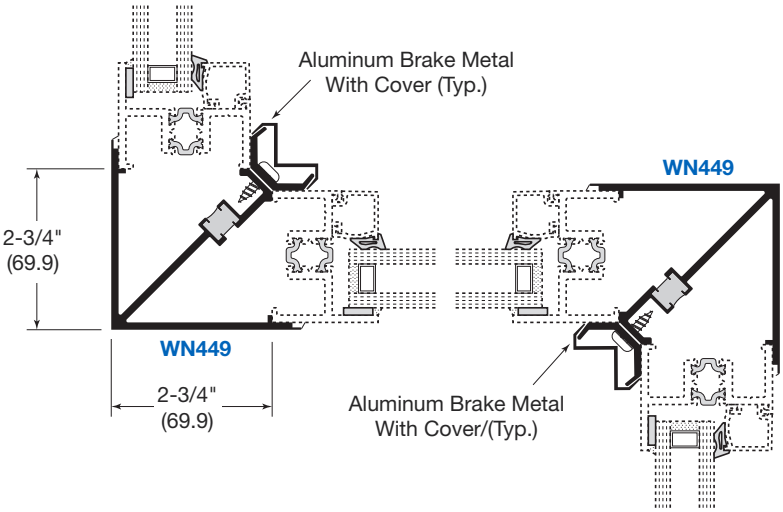

Corner Adaptors

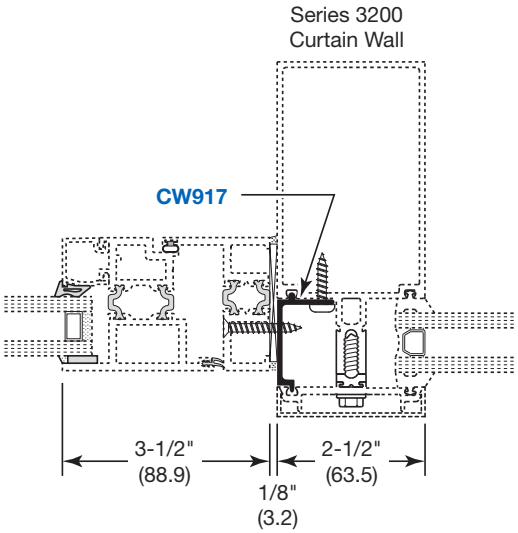

Curtain Wall Adaptor

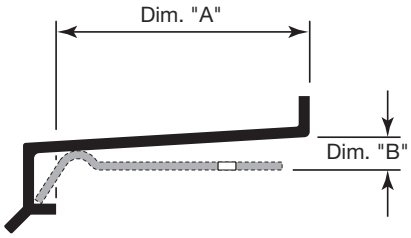

Extruded Sill Flashings

PART NO.	DIM. "A"	DIM. "B"	LENGTH
WN442	2-3/4" (69.9)	3/8" (9.5)	24' (7.3 m)
WN443	3-1/4" (82.6)	13/32" (10.3)	24' (7.3 m)
WN444	3-3/4" (95.3)	7/16" (11.1)	24' (7.3 m)
WN445	4-1/4" (108)	15/32" (11.8)	24' (7.3 m)
WN446	4-3/4" (120.7)	1/2" (12.7)	24' (7.3 m)
WN447	5-1/4" (133.4)	17/32" (13.5)	24' (7.3 m)
WN448	6-7/32" (158)	19/32" (15.1)	24' (7.3 m)

WINDOWS

Table of Contents

Concealed Vent
• Series 7500

SECTION L3 PAGE

SPECIFICATIONS .....02-L3 and 03-L3
SPECIAL FEATURES 04-L3
TYPICAL DETAILS WITH SERIES 3250 CURTAIN WALL, 1" (25) GLASS 05-L3
TYPICAL DETAILS WITH SERIES 4500 CURTAIN WALL, 1" (25) GLASS 06-L3

Project: Recreation Center, Denver, CO

Due to the diversity in state/provincial, local, and federal laws and codes that govern the design and application of architectural products, it is the responsibility of the individual architect, owner, and installer to ensure that products selected for use on projects comply with all applicable building codes and laws. U.S. Aluminum exercises no control over the use or application of its products, glazing materials, and operating hardware, and assumes no responsibility thereof.

The rapidly changing technology within the architectural aluminum products industry demands that U.S. Aluminum reserve the right to revise, discontinue or change any product line, specification or electronic media without prior written notice.

NOTE: Dimensions in parentheses ( ) are millimeters unless otherwise noted.
Other metric units shown in this publication are:

m - meter	Kg - kilogram
Pa - pascal	KPa - kilopascal
MPa - megapascal	

WINDOWS

Specifications

Concealed Vent
• Series 7500

SECTION 08 51 13 ALUMINUM WINDOWS

Drawings and specifications are based on the Series 7500 Concealed Vent Thermal C-75 Windows as manufactured by U.S. Aluminum. Whenever substitute products are to be considered, supporting technical literature, samples, drawings, and performance data must be submitted 10 days prior to bid in order to make a valid comparison of the products involved. Test reports certified by an AAMA independent test laboratory must be made available upon request.

PART 1 GENERAL

1.01 Work Included

A. Furnish and install aluminum architectural windows complete with hardware and related components as shown on drawings and specified in this section.

Specify glass and glazing in this section if window assemblies are to be glazed by the window manufacturer. If glazing is to be done by a different contractor, glass and glazing should be specified in Section 08 80 00.

B. Glass and Glazing
1. All units shall be factory glazed.

OR

1. Reference Section 08 80 00 for Glass and Glazing.

List work and materials related to this section but specified in other sections.

1.02 Related Work

Section 08 40 00 - Entrances and Storefronts
Section 08 44 00 - Glazed Curtain Walls
Section 08 50 00 - Windows

1.03 Testing and Performance Requirements

A. Test Units
1. Air, water, and structural test unit shall conform to requirements set forth in ANSI/AAMA/NWWDA 101 I.S. 2-97 and AAMA 910-93 or CSA A440.
2. Thermal test unit sizes shall be 36" x 60" (914 x 1524). Unit shall consist of a casement, fixed or projected window.

B. Test Procedures and Performances
1. **Standards:** Windows shall conform to all AAMA/ ANSI/NWWDA-101 I.S. 2-97 and AAMA 910-93 or CSA A440 requirements for the window type referenced in 1.01.B. In addition, the following specific performance requirements shall be met.
2. **Air Infiltration Test:** With ventilators closed and locked, test unit in accordance with ASTM E 283-91 at a static air pressure difference of 6.24 psf. Air infiltration shall not exceed .30 cfm per foot of crack.
3. **Water Resistance Test:** With ventilators closed and locked, test unit in accordance with ASTM E 331-96 /ASTM E 547 at a static air pressure difference of 12 psf. There shall be no uncontrolled water leakage.
4. **Uniform Load Deflection Test:** With ventilators closed and locked, test unit in accordance with ASTM E 330-97 at a static air pressure difference of 112.5 psf positive and negative pressure. No member shall deflect over L/175 of its span.
5. **Condensation Resistance Test (CRF):** With ventilators closed and locked, test unit in accordance with AAMA 1503. Condensation Resistance Factor (CRF) shall not be less than 49.
6. **Thermal Transmittance Test (Conductive U-Value):** With ventilators closed and locked, test unit in accordance with NFRC 100 and AAMA 1503. Conductive thermal transmittance (U-Value) shall have a range between 0.35 to 0.56 BTU/hr/ft2/°F.
7. **AAMA C75 Rating Testing Procedures:** AAMA/WDMA/CSA 101/I.S.2/ A440-0.8 - Laboratory Performance Testing.
AAMA 502-08 - Newly Installed Fenestration Products.
AAMA 511-08 - Installed Fenestration Products After 6 Months.

1.04 Quality Assurance

A. Provide test reports from AAMA accredited laboratories certifying the performance as specified in 1.05 or 11.15 of CSA A440.

B. Test reports shall be accompanied by the window manufacturer's letter of certification, stating the tested window meets or exceeds the referenced criteria for the appropriate AAMA/NWWDA 101/I.S.2-97 and AAMA 910-93 or CSA A440 window type.

1.05 Submittals

A. Contractor shall submit shop drawings, finish samples, test reports, and warranties.

1.06 Warranties

A. Total Window System
1. The responsible contractor shall assume full responsibility and warrant for one year the satisfactory performance of the total window installation which includes that of the windows, hardware, glass (including insulating units), glazing, anchorage and setting system, sealing, flashing, etc., as it relates to air, water, and structural adequacy as called for in the specifications and approved shop drawings.

WINDOWS

Specifications

Concealed Vent
• Series 7500

SECTION 08 51 13 ALUMINUM WINDOWS

PART 2 PRODUCTS

2.01 Materials

A. Aluminum
1. Extruded aluminum shall be 6063-T5 alloy and tempered.

B. Hardware
1. Locking handles shall be cam type as supplied by U.S. Aluminum.
2. Operating hardware shall be 4-bar stainless steel arms or equal.

C. Weatherstrip
1. All weatherstrip shall be E.P.D.M. or equal.

D.Thermal Barrier
1. Barrier material shall be poured-in-place two part polyurethane. To ensure that composite strength remains unaltered during thermal cycling, a mechanical bond between the aluminum and the thermal filling shall be created by mechanically abrading the extrusion thermal cavity prior to filling with the polyurethane polymer. A non-structural thermal barrier is unacceptable.
2. Specified hardware shall not bridge the thermal barrier.

E. Glass
1. Insulating glass shall be ( ) as manufactured by ( ) consisting of ( ) exterior, ( ) air spacer, and ( ) interior.

OR

1. Glass shall be 1/4" (6) monolithic tempered.

2.02 Fabrication

A. General
1. All primary aluminum frame and vent extrusions shall have a minimum wall thickness of .125" (3.2).
2. Mechanical fasteners, welded components, and hardware items shall not bridge thermal barriers. Thermal barriers shall align at all frame and vent corners.
3. Depth of frame and vent shall not be less than 2-1/4" (57.2) for 1/4" (6) glazing or 3" (76.2) for 1" (25) glazing.

B. Frame
1. Frame components shall be mechanically fastened.

C. Ventilator
1. All vent extrusions shall be tubular.
2. Each corner shall be mitered, reinforced with an extruded corner key, and hydraulically crimped.
3. Each vent shall be pressure equalized utilizing two rows of E.P.D.M. weatherstripping (or equal) installed in dovetail grooves in the extrusion.
4. The vent shall present a flush appearance with the main frame when in the closed position.

E. Screens
1. Screen frames shall be extruded.
2. Screen mounting holes in the window frame shall be factory drilled.
3. Screen mesh shall be aluminum or fiberglass. (if applicable)

F. Glazing
1. All units shall be glazed with spacer and structural silicone.

G. Finish
All exposed framing surfaces shall be free of scratches and other serious blemishes. Aluminum extrusions shall be given a caustic etch followed by an anodic oxide treatment to obtain...

(Specify one of the following)

_____#11 Clear anodic coating
_____#22 Dark Bronze anodic coating
_____#33 Black anodic coating

A Fluoropolymer paint coating conforming with the requirements of AAMA 2605. Color shall be *(Specify a U.S. Aluminum standard color)*.

PART 3 EXECUTION

3.01 Inspection

A. Job Conditions
1. Verify that openings are dimensionally within allowable tolerances, plumb, level, clean, provide a solid anchoring surface, and are in accordance with approved shop drawings.

3.02 Installation

A. Use only skilled tradesmen with work done in accordance with approved shop drawings and specifications.
B. Adequately anchor to maintain positions permanently when subjected to normal thermal movement, specified building movement, and specified wind loads.
C. Adjust windows for proper operation after installation.
D. Furnish and apply sealants to provide a weather tight installation at all joints and intersections and at opening perimeters.

3.03 Protection and Cleaning

A. After completion of window installation, windows shall be inspected, adjusted, put into working order and left clean, free of labels, dirt, etc. Protection from this point shall be the responsibility of the general contractor.

WINDOWS

Special Features

Concealed Vent
• Series 7500

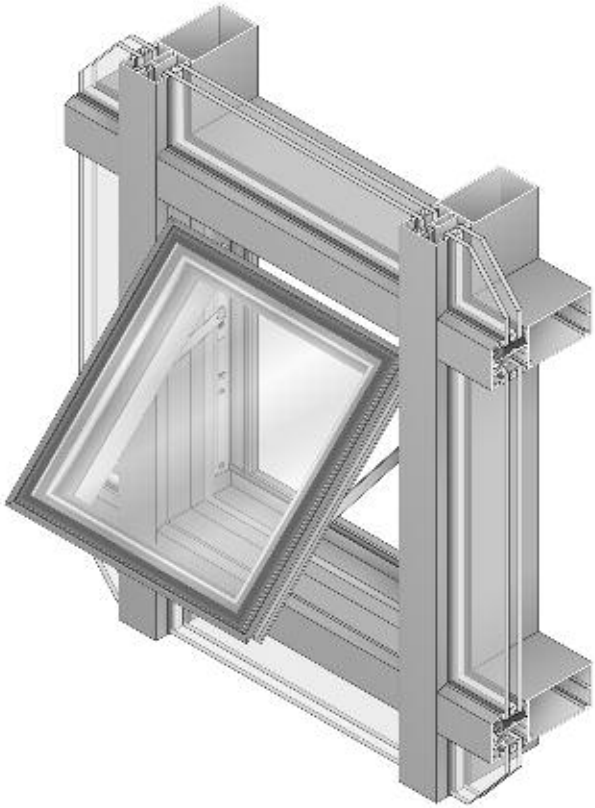

Series 7500 Concealed Vent
(Project-Out Only)

The Series 7500 Concealed Vent is a minimal sightline, swing out, Thermally Broken Window, perfect for use in storefront, ribbon windows, and curtain wall openings. Stainless steel 4-bar hinges and cam locking handles complete the standard hardware. As with all of our operable windows, vent construction is accomplished with tubular vent components, mitered, reinforced with corner keys, and crimped.

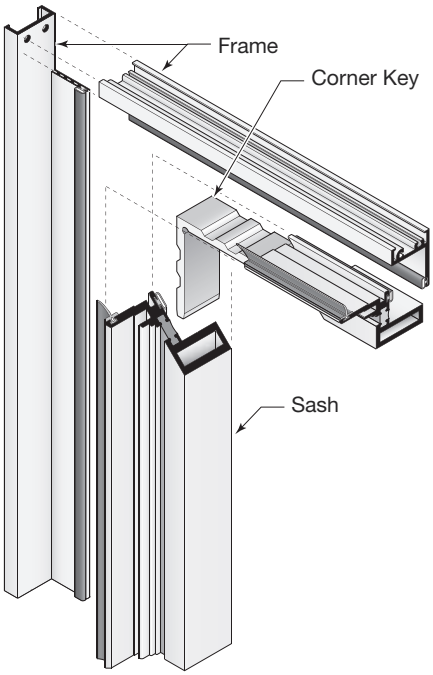

When closed, the vent is sealed to the frame with E.P.D.M. bulb gaskets ensuring an airtight seal. The glass is held in place with structural silicone. The Series 7500 Concealed Vent is available in 1" (25) or 1/4" (6) glass versions.

HARDWARE SELECTION GUIDE				
Series 7500 Concealed Vent Window				
WH041 Cam Handle	**WH042** Keeper	**WH040** Handle Base	**WH765** Snubber Driver	**WH766** Snubber Receiver

WINDOWS

Typical Details

Concealed Vent
• Series 7500

FOR 1" (25) GLAZING
Series 7500 Shown With Series 3250 Curtain Wall

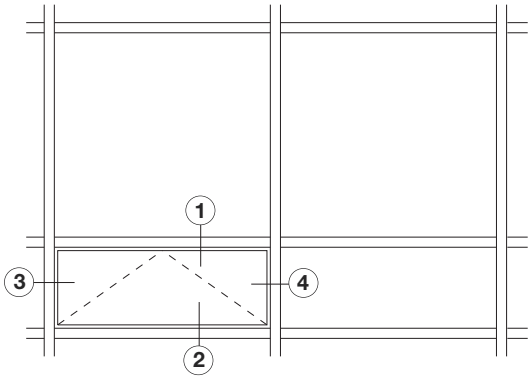

TYPICAL ELEVATION

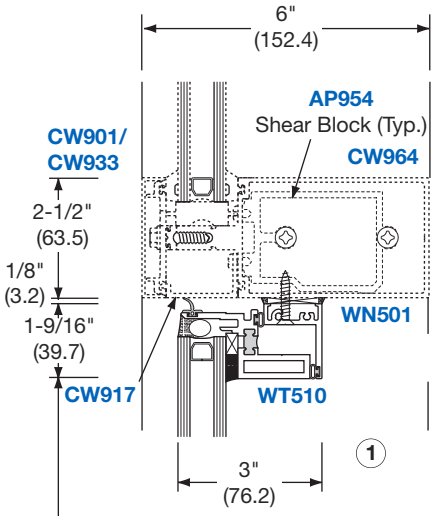

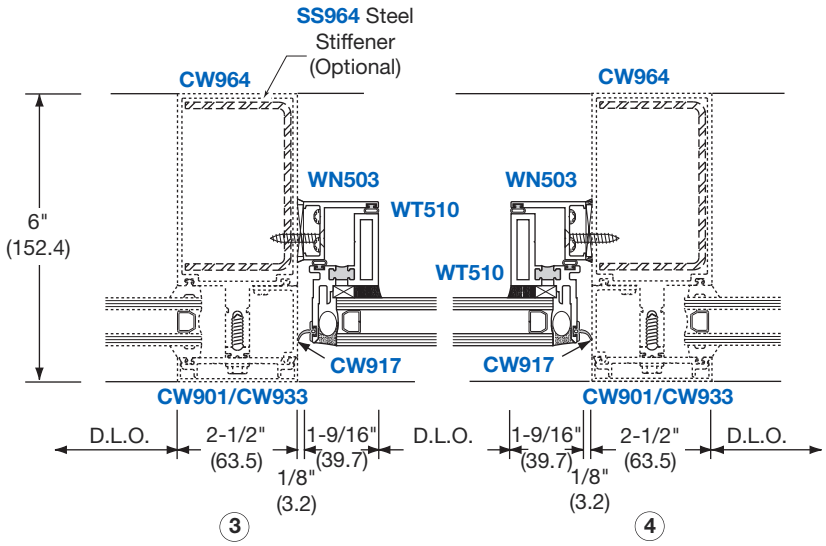

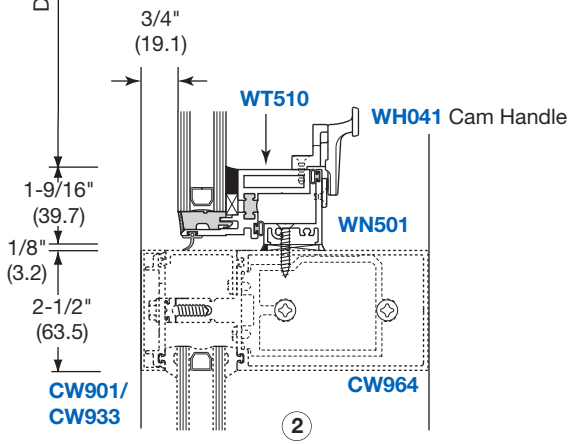

NOT TO SCALE

WINDOWS

Typical Details

Concealed Vent
• Series 7500

FOR 1" (25) GLAZING

Series 7500 Shown With Series 4500 Curtain Wall

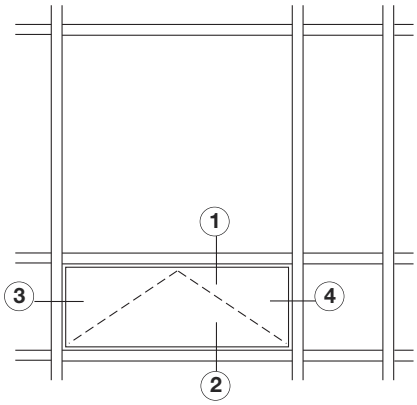

TYPICAL ELEVATION

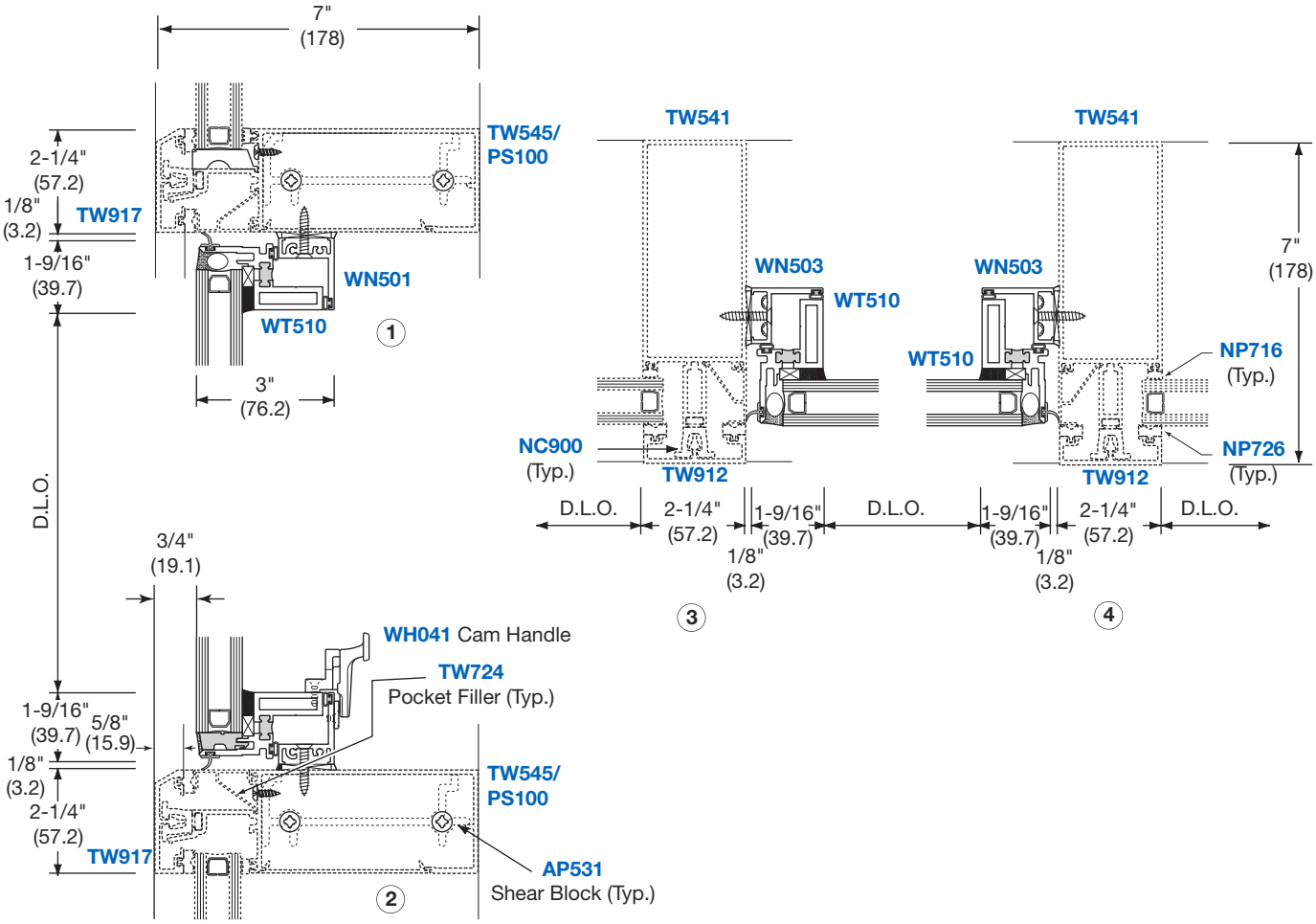

NOT TO SCALE

WINDOWS

Table of Contents

Concealed Vent
• Series 7600

SECTION L4 PAGE

SPECIFICATIONS .....02-L4 and 03-L4
SPECIAL FEATURES 04-L4
TYPICAL DETAILS WITH SERIES 3250 CURTAIN WALL, 1" (25) GLASS 05-L4
TYPICAL DETAILS WITH SERIES 4500 CURTAIN WALL, 1" (25) GLASS 06-L4

Project: 800J Lofts, Sacramento, CA

Due to the diversity in state/provincial, local, and federal laws and codes that govern the design and application of architectural products, it is the responsibility of the individual architect, owner, and installer to ensure that products selected for use on projects comply with all applicable building codes and laws. U.S. Aluminum exercises no control over the use or application of its products, glazing materials, and operating hardware, and assumes no responsibility thereof.

The rapidly changing technology within the architectural aluminum products industry demands that U.S. Aluminum reserve the right to revise, discontinue or change any product line, specification or electronic media without prior written notice.

NOTE: Dimensions in parentheses ( ) are millimeters unless otherwise noted.
Other metric units shown in this publication are:

m - meter	Kg - kilogram
Pa - pascal	KPa - kilopascal
MPa - megapascal	

WINDOWS

Specifications

Concealed Vent • Series 7600

SECTION 08 51 13 ALUMINUM WINDOWS

QUALITY ASSURANCE

Drawings and specifications are based on the Series 7600 Concealed Vent Thermal CW100 Windows as manufactured by U.S. Aluminum. Whenever substitute products are to be considered, supporting technical literature, samples, drawings, and performance data must be submitted 10 days prior to bid in order to make a valid comparsion of the products involved. Test reports certified by an AAMA independent test laboratory must be made available upon request.

PART 1 GENERAL

1.01 Work Included

A. Furnish and install aluminum architectural windows complete with hardware and related components as shown on drawings and specified in this section.

Specify glass and glazing in this section if window assemblies are to be glazed by the window manufacturer. If glazing is to be done by a different contractor, glass and glazing should be specified in Section 08 80 00.

B. Glass and Glazing

1. All units shall be factory glazed.

OR

1. Reference Section 08 80 00 for Glass and Glazing.

List work and materials related to this section but specified in other sections.

1.02 Related Work

Section 08 40 00 - Entrances and Storefronts
Section 08 44 00 - Glazed Curtain Walls
Section 08 50 00 - Windows

1.03 Testing and Performance Requirements

A. Test Units

1. Air, water, and structural test unit shall conform to requirements set forth in ANSI/AAMA/NWWDA 101 I.S. 2-97 and AAMA 910-93 or CSA A440.
2. Thermal test unit sizes shall be 36" x 60" (914 x 1524). Unit shall consist of a casement, fixed or projected window.

B. Test Procedures and Performances

1. **Standards:** Windows shall conform to all AAMA/ANSI/NWWDA-101 I.S. 2-97 and AAMA 910-93 or CSA A440 requirements for the window type referenced in 1.01.B. In addition, the following specific performance requirements shall be met.
2. **Air Infiltration Test:** With ventilators closed and locked, test unit in accordance with ASTM E 283-91 at a static air pressure difference of 6.24 psf. Air infiltration shall not exceed .30 cfm per foot of crack.
3. **Water Resistance Test:** With ventilators closed and locked, test unit in accordance with ASTM E 331-96/ASTM E 547 at a static air pressure difference of 12 psf. There shall be no uncontrolled water leakage.
4. **Uniform Load Deflection Test:** With ventilators closed and locked, test unit in accordance with ASTM E 330-97 at a static air pressure difference of 112.5 psf positive and negative pressure. No member shall deflect over L/175 of its span.
5. **Condensation Resistance Test (CRF):** With ventilators closed and locked, test unit in accordance with AAMA 1503. Condensation Resistance Factor (CRF) shall not be less than 49.
6. **Thermal Transmittance Test (Conductive U-Value):** With ventilators closed and locked, test unit in accordance with NFRC 100 and AAMA 1503. Conductive thermal transmittance (U-Value) shall have a range between 0.35 to 0.56 BTU/hr/ft^2/°F.
7. **AAMA CW100 Rating Testing Procedures:** Testing Procedures -AAMA/WDMA/CSA 101/I.S.2/A440-8 - Laboratory Performance Testing.
   AAMA 503-08 - Newly Installed Fenestration Products.
   AAMA 511-08 - Installed Fenestration Products After 6 Months.

1.04 Quality Assurance

A. Provide test reports from AAMA accredited laboratories certifying the performance as specified in 1.05 or 11.15 of CSA A440.

B. Test reports shall be accompanied by the window manufacturer's letter of certification, stating the tested window meets or exceeds the referenced criteria for the appropriate AAMA/NWWDA 101/I.S.2-97 and AAMA 910-93 or CSA A440 window type.

1.05 Submittals

A. Contractor shall submit shop drawings, finish samples, test reports, and warranties.

1.06 Warranties

A. Total Window System

1. The responsible contractor shall assume full responsibility and warrant for one year the satisfactory performance of the total window installation which includes that of the windows, hardware, glass (including insulating units), glazing, anchorage and setting system, sealing, flashing, etc., as it relates to air, water, and structural adequacy as called for in the specifications and approved shop drawings.

WINDOWS

Specifications

Concealed Vent
• Series 7600

SECTION 08 51 13 ALUMINUM WINDOWS

PART 2 PRODUCTS

2.01 Materials

A. Aluminum
1. Extruded aluminum shall be 6063-T5 alloy and tempered.

B. Hardware
1. Locking handles shall be Single Multi-Point as supplied by U.S. Aluminum.
2. Operating hardware shall be 4-bar stainless steel arms or equal.

C. Weatherstrip
1. All weatherstrip shall be E.P.D.M. or equal.

D. Thermal Barrier
1. Barrier material shall be poured-in-place two part polyurethane. To ensure that composite strength remains unaltered during thermal cycling, a mechanical bond between the aluminum and the thermal filling shall be created by mechanically abrading the extrusion thermal cavity prior to filling with the polyurethane polymer. A non-structural thermal barrier is unacceptable.
2. Specified hardware shall not bridge the thermal barrier.

E. Glass
1. Insulating glass shall be ( ) as manufactured by ( ) consisting of ( ) exterior, ( ) air spacer, and ( ) interior.

2.02 Fabrication

A. General
1. All primary aluminum frame and vent extrusions shall have a minimum wall thickness of .125" (3.2)
2. Mechanical fasteners, welded components, and hardware items shall not bridge thermal barriers. Thermal barriers shall align at all frame and vent corners.
3. Depth of frame 3" (76.2) for 1" (25) glazing.

B. Frame - Frame components shall be mechanically fastened.

C. Ventilator
1. All vent extrusions shall be tubular.
2. Each corner shall be mitered, reinforced with an extruded corner key, and hydraulically crimped.
3. Each vent shall be pressure equalized utilizing two rows of E.P.D.M. weatherstripping (or equal) installed in dovetail grooves in the extrusion.
4. The vent shall present a flush appearance with the main frame when in the closed position.

D. Screens
1. Screen frames shall be extruded.
2. Screen mounting holes in the window frame shall be factory drilled.
3. Screen mesh shall be aluminum or fiberglass. (if applicable)

E. Glazing - All units shall be glazed with spacer and structural silicone.

F. Finish
All exposed framing surfaces shall be free of scratches and other serious blemishes. Aluminum extrusions shall be given a caustic etch followed by an anodic oxide treatment to obtain... *(Specify one of the following)*
_____#11 Clear anodic coating
_____#22 Dark Bronze anodic coating
_____#33 Black anodic coating
A Fluoropolymer paint coating conforming with the requirements of AAMA 2605. Color shall be *(Specify a U.S. Aluminum standard color)*.

PART 3 EXECUTION

3.01 Inspection

A. Job Conditions
1. Verify that openings are dimensionally within allowable tolerances, plumb, level, clean, provide a solid anchoring surface, and are in accordance with approved shop drawings.

3.02 Installation

A. Use only skilled tradesmen with work done in accordance with approved shop drawings and specifications.

B. Adequately anchor to maintain positions permanently when subjected to normal thermal movement, specified building movement, and specified wind loads.

C. Adjust windows for proper operation after installation.

D. Furnish and apply sealants to provide a weather tight installation at all joints and intersections and at opening perimeters.

3.03 Protection and Cleaning

A. After completion of window installation, windows shall be inspected, adjusted, put into working order and left clean, free of labels, dirt, etc. Protection from this point shall be the responsibility of the general contractor.

WINDOWS

Special Features

Concealed Vent
• Series 7600

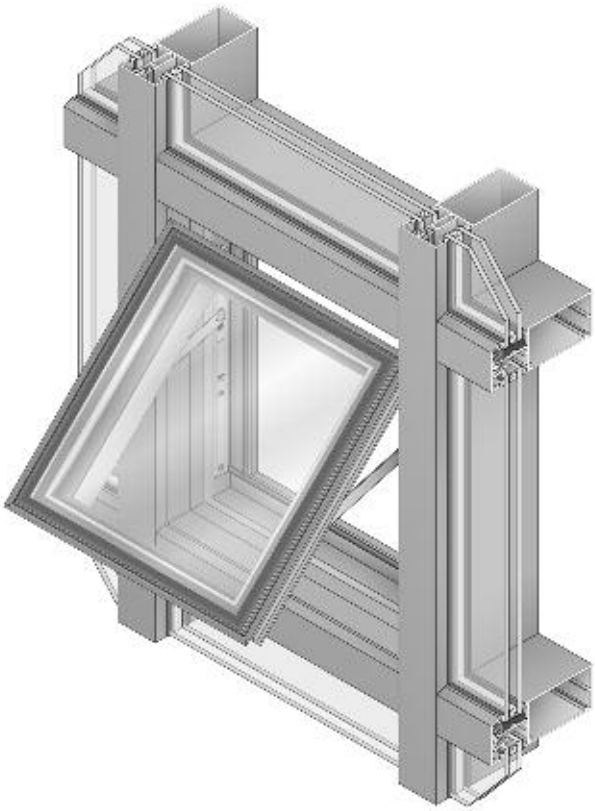

Series 7600 Concealed Vent

When closed, the vent is sealed to the frame with E.P.D.M. bulb gaskets ensuring an airtight seal. The glass is held in place with structural silicone. The Series 7600 Concealed Vent is available for 1" (25) Glazing.

The Series 7600 Concealed Vent is a minimal sightline, swing out, Thermally Broken Window, perfect for use in storefront, ribbon windows and curtain wall openings. Stainless steel 4-bar hinges and multi-point euro hardware locking handles complete the standard hardware. As with all of our operable windows, vent construction is accomplished with tubular vent components, mitered, reinforced with corner keys, and crimped.

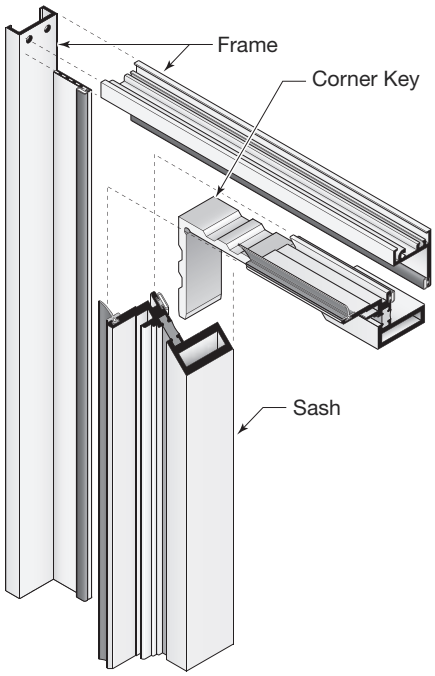

EURO HARDWARE SELECTION GUIDE			
Series 7600 Concealed Vent Window Locking Handles			
EUR1248W Powder Coat White	**EUR1248BL** Powder Coat Black	**EUR1248SN** Satin Nickel	**EUR1248SC** Satin Chrome

WINDOWS

Typical Details

Concealed Vent • Series 7600

FOR 1" (25) GLAZING

Series 7600 Shown With Series 3250 Curtain Wall

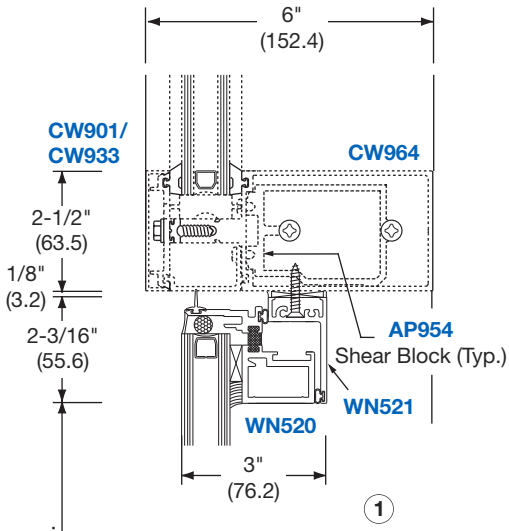

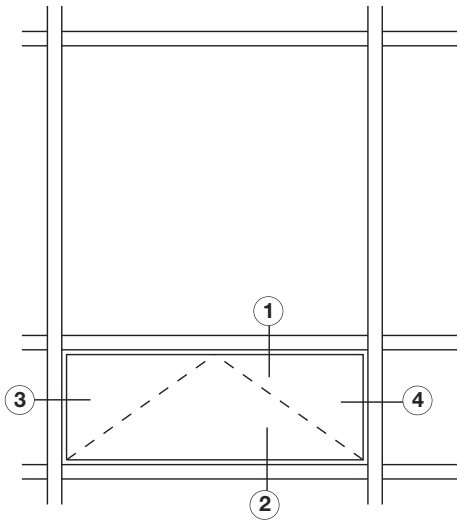

TYPICAL ELEVATION

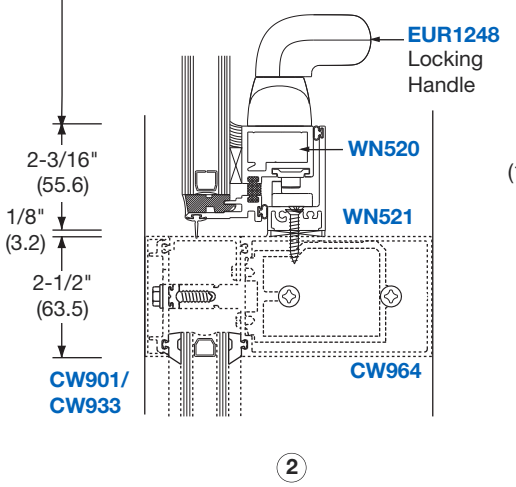

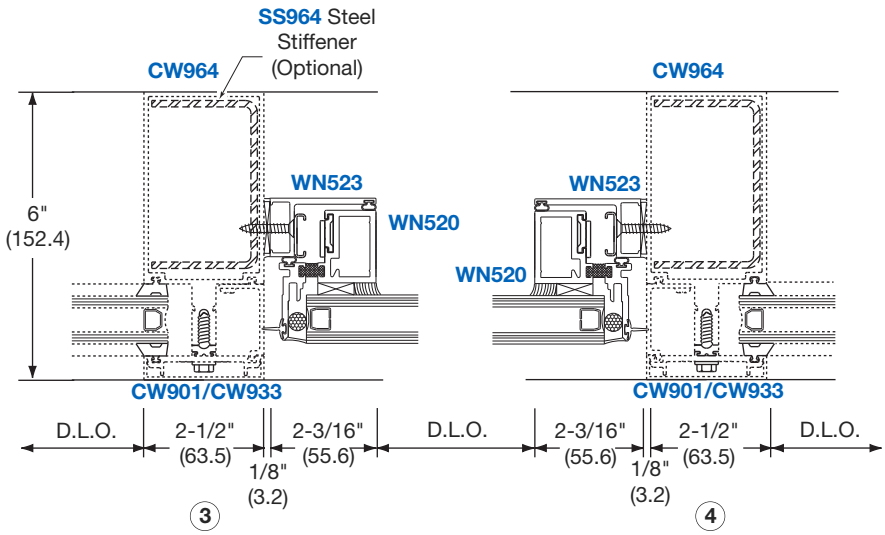

NOT TO SCALE

WINDOWS

Typical Details

Concealed Vent
• Series 7600

FOR 1" (25) GLAZING
Series 7600 Shown With Series 4500 Curtain Wall

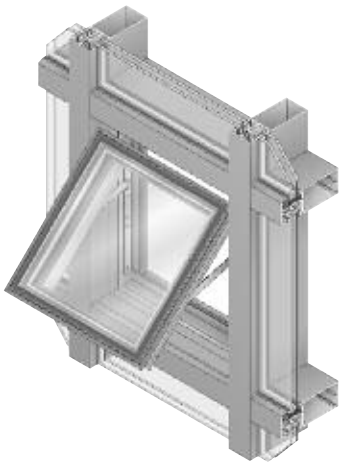

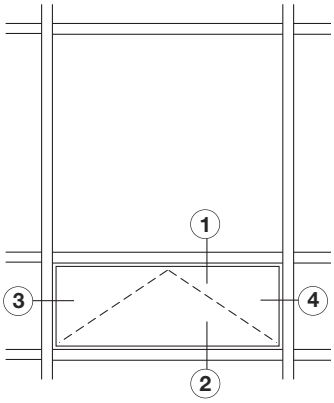

TYPICAL ELEVATION

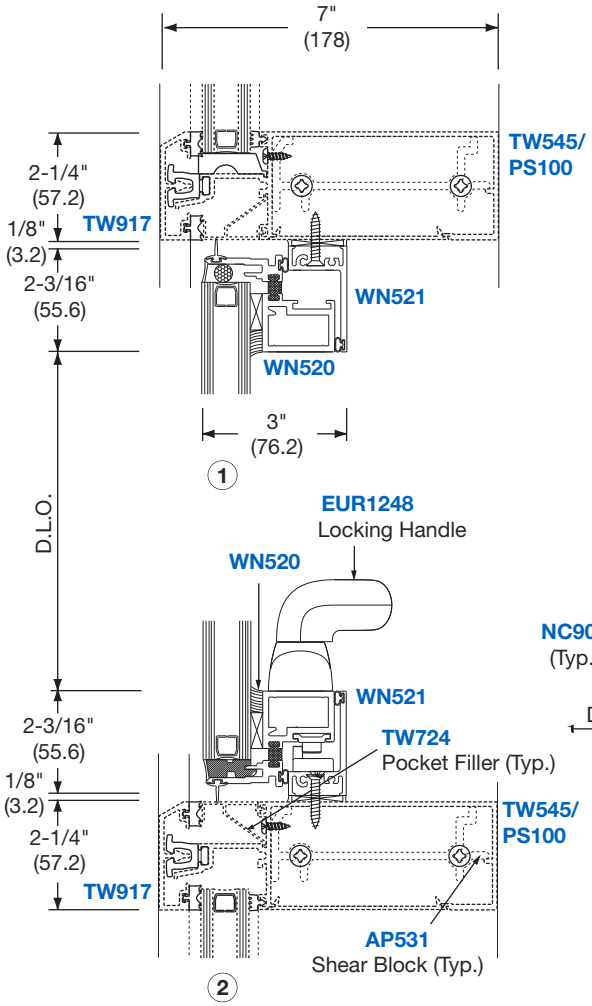

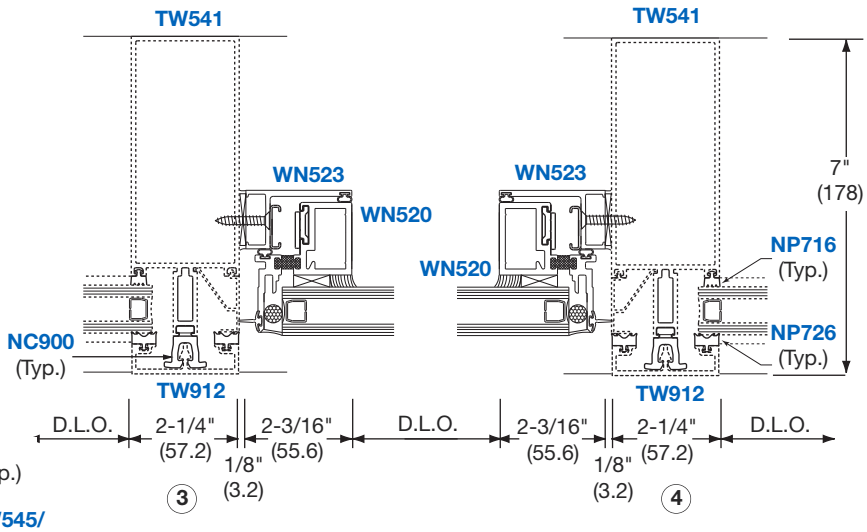

NOT TO SCALE

WINDOWS

Table of Contents

Single Hung, Fixed, and Sliding Windows

- Series 8000
- Series 8100
- Series 8200

SECTION L5 **PAGE**

SPECIFICATIONS SERIES 8000, 8100, AND 8200 WINDOWS ....02-L5 and 03-L5
SPECIAL FEATURES SINGLE HUNG SERIES 8000 WINDOW 04-L5
TYPICAL DETAILS SINGLE HUNG SERIES 8000 WINDOW 05-L5
SPECIAL FEATURES FIXED SERIES 8100 WINDOW 06-L5
TYPICAL DETAILS FIXED SERIES 8100 WINDOW 07-L5
SPECIAL FEATURES HORIZONTAL SLIDER SERIES 8200 WINDOW 08-L5
TYPICAL DETAILS HORIZONTAL SLIDER SERIES 8200 WINDOW 09-L5

Project: River Rock Casino Resort, British Columbia, Canada

Due to the diversity in state/provincial, local, and federal laws and codes that govern the design and application of architectural products, it is the responsibility of the individual architect, owner, and installer to ensure that products selected for use on projects comply with all applicable building codes and laws. U.S. Aluminum exercises no control over the use or application of its products, glazing materials, and operating hardware, and assumes no responsibility thereof.

The rapidly changing technology within the architectural aluminum products industry demands that U.S. Aluminum reserve the right to revise, discontinue or change any product line, specification or electronic media without prior written notice.

NOTE: Dimensions in parentheses ( ) are millimeters unless otherwise noted.
Other metric units shown in this publication are:

m - meter	Kg - kilogram
Pa - pascal	KPa - kilopascal
MPa - megapascal	

WINDOWS

Specifications

SECTION 08 51 13 ALUMINUM WINDOWS

Single Hung, Fixed, and Sliding Windows

- Series 8000
- Series 8100
- Series 8200

QUALITY ASSURANCE

Drawings and specifications are based on Series 8000 Single Hung, 8100 Fixed, or 8200 Horizontal Sliding *(Specify)* Thermal CW60 Windows as manufactured by U.S. Aluminum. Whenever substitute products are to be considered, supporting technical literature, samples, drawings, and performance data must be submitted 10 days prior to bid in order to make a valid comparsion of the products involved. Test reports certified by an AAMA independent test laboratory must be made available upon request.

PART 1 GENERAL

1.01 Work Included

A. Furnish and install aluminum architectural windows complete with hardware and related components as shown on drawings and specified in this section.

Specify glass and glazing in this section if window assemblies are to be glazed by the window manufacturer. If glazing is to be done by a different contractor, glass and glazing should be specified in Section 08 80 00.

B. Glass and Glazing
   1. All units shall be factory glazed.

OR

   1. Reference Section 08 80 00 for Glass and Glazing.

List work and materials related to this section but specified in other sections.

1.02 Related Work

Section 08 40 00 - Entrances and Storefronts
Section 08 44 00 - Glazed Curtain Walls
Section 08 50 00 - Windows

1.03 Testing and Performance Requirements

A. Test Units
   1. Air, water, and structural test unit shall conform to requirements set forth in ANSI/AAMA/NWWDA 101 I.S. 2-97 and AAMA 910-93 or CSA A440.
   2. Thermal test unit sizes shall be 47-1/4" x 59" (1200 x 1500) for Series 8000 and 8100, 59"x 47-1/4" (1500 x 1200) for Series 8200. Unit shall consist of a single hung, fixed or horizontal sliding window.

B. Test Procedures and Performances
   1. **Standards:** Windows shall conform to all AAMA/ANSI/NWWDA-101 I.S. 2-97 and AAMA 910-93 or CSA A440 requirements for the window type referenced in 1.01.B. In addition, the following specific performance requirements shall be met.
   2. **Air Infiltration Test:** With ventilators closed and locked, test unit in accordance with ASTM E 283-91 at a static air pressure difference of 6.24 psf. Air infiltration shall not exceed .30 cfm per foot of crack.
   3. **Water Resistance Test:** With ventilators closed and locked, test unit in accordance with ASTM E 331-96/ASTM E 547 at a static air pressure difference of 12 psf. There shall be no uncontrolled water leakage.
   4. **Uniform Load Deflection Test:** With ventilators closed and locked, test unit in accordance with ASTM E 330-97 at a static air pressure difference of 90 psf positive and negative pressure. No member shall deflect over L/175 of its span.
   5. **Condensation Resistance Test (CRF):** With ventilators closed and locked, test unit in accordance with AAMA 1503. Condensation Resistance Factor (CRF) shall not be less than 49 for Series 8100 and 8200. Not less than 50 for Series 8000.
   6. **Thermal Transmittance Test (Conductive U-Value):** With ventilators closed and locked, test unit in accordance with NFRC 100 and AAMA 1503. Conductive thermal transmittance (U-Value) for Series 8000 and 8200 Windows shall have a range between 0.35 to 0.56 BTU/hr/ft^2/ºF and Series 8100 Windows shall have a range between 0.33 to 0.56 BTU/hr/ft^2/ºF.
   7. **AAMA CW60 Rating Testing Procedures:**
      - AAMA/WDMA/CSA 101/I.S.2/ A440-8 - Laboratory Performance Testing.
      - AAMA 503-08 - Newly Installed Fenestration Products.
      - AAMA 511-08 - Installed Fenestration Products After 6 Months.

1.04 Quality Assurance

A. Provide test reports from AAMA accredited laboratories certifying the performance as specified in 1.05 or 11.15 of CSA A440.
B. Test reports shall be accompanied by the window manufacturer's letter of certification, stating the tested window meets or exceeds the referenced criteria for the appropriate AAMA/NWWDA 101/I.S.2-97 and AAMA 910-93 or CSA A440 window type.

1.05 Submittals

A. Contractor shall submit shop drawings, finish samples, test reports, and warranties.

1.06 Warranties

A. Total Window System
   1. The responsible contractor shall assume full responsibility and warrant for one year the satisfactory performance of the total window installation which includes that of the windows, hardware, glass (including insulating units), glazing, anchorage and setting system, sealing, flashing, etc., as it relates to air, water, and structural adequacy as called for in the specifications and approved shop drawings.

WINDOWS

Specifications

SECTION 08 51 13 ALUMINUM WINDOWS

Single Hung, Fixed, and Sliding Windows

- Series 8000
- Series 8100
- Series 8200

PART 2 PRODUCTS

2.01 Materials

A. Aluminum
1. Extruded aluminum shall be 6063-T5 alloy and tempered.

B. Hardware
1. Series 8000 and 8200 Windows have spring loaded self-locking latches as supplied by U.S. Aluminum.

C. Weatherstrip
1. For Series 8000 and 8200 Windows weatherstrip shall be fin seal or equal. For Series 8100 Windows all weatherstrip shall be E.P.D.M.

D. Thermal Barrier
1. Barrier material shall be poured-in-place two part polyurethane. To ensure that composite strength remains unaltered during thermal cycling, a mechanical bond between the aluminum and the thermal filling shall be created by mechanically abrading the extrusion thermal cavity prior to filling with the polyurethane polymer. A non-structural thermal barrier is unacceptable.
2. Specified hardware shall not bridge the thermal barrier.

E. Glass
1. Insulating glass shall be ( ) as manufactured by ( ) consisting of ( ) exterior, ( ) air spacer, and ( ) interior.

2.02 Fabrication

A. General
1. All primary aluminum frame, extrusions or vent extrusions shall have a minimum wall thickness of .062 (1.57)
2. Depth of frame 4-1/2" (114.3) for 1" (25) glazing.

B. Frame - Frame components shall be mechanically fastened.

C. Ventilator (Series 8000 and 8200)
1. All vent extrusions shall be notched.

D. Screens (Series 8000 and 8200)
1. Screen frames shall have springs locking the screen in place.
2. Screen mesh shall be aluminum or fiberglass. (if applicable)

E. Glazing - All units shall be either shop or field glazed.

F. Finish
All exposed framing surfaces shall be free of scratches and other serious blemishes. Aluminum extrusions shall be given a caustic etch followed by an anodic oxide treatment to obtain...
(Specify one of the following)
_____#11 Clear anodic coating
_____#22 Dark Bronze anodic coating
_____#33 Black anodic coating
A Fluoropolymer paint coating conforming with the requirements of AAMA 2605. Color shall be *(Specify a U.S. Aluminum standard color)*.

PART 3 EXECUTION

3.01 Inspection

A. Job Conditions
1. Verify that openings are dimensionally within allowable tolerances, plumb, level, clean, provide a solid anchoring surface, and are in accordance with approved shop drawings.

3.02 Installation

A. Use only skilled tradesmen with work done in accordance with approved shop drawings and specifications.

B. Adequately anchor to maintain positions permanently when subjected to normal thermal movement, specified building movement, and specified wind loads.

C. Adjust windows for proper operation after installation.

D. Furnish and apply sealants to provide a weather tight installation at all joints and intersections and at opening perimeters.

3.03 Protection and Cleaning

A. After completion of window installation, windows shall be inspected, adjusted, put into working order and left clean, free of labels, dirt, etc. Protection from this point shall be the responsibility of the general contractor.

WINDOWS

Special Features

Single Hung Window • Series 8000

The Series 8000 Single Hung Window uses a Class 5 Balance for smooth operation. The 4-1/2" (114) deep frame is designed to match typical building conditions, including our entrances and storefronts. An efficient thermally insulated frame accepts 1" (25) glazing, with extruded pulls at the interlock and bottom rail. The window features a self-locking latch.

- Tested to AAMA CW60
- Accepts 1" (25) Glazing
- Thermally Insulated-NFRC Certified
- U-Factors as Low as 0.34
- 4-1/2" (114) Deep Frame to Match Typical Building Conditions
- Choice of Block or Fin Frame
- Class 5 Balance for Ease of Operation
- Accessories Such as Screens, Mulling Bars, Subsills, Head and Jamb Channels are Available
- Available in an Array of Architectural Coatings and Anodized Finishes
- Complemented by the **Series 8200** Horizontal Sliding and **Series 8100** Fixed Windows
- Made in the U.S.A.

Single Hung Windows

WINDOWS

Typical Details

FOR 1" (25) GLAZING

Series 8000 Single Hung Window
With Series 3250 Curtain Wall System

A complete set of details
in DWG format is available
at **usalum.com**

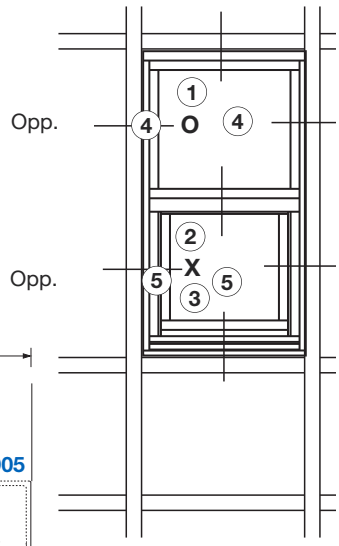

TYPICAL ELEVATION

Maximum Frame Size
56" x 91" (1422 x 2311)

Single Hung Window

• Series 8000

Meets or Exceeds Specifications:

- AAMA - CW60
- AAMA/WDMA/CSA 101/1.S.2/A 440 -08
  - ASTM E 283-04
  - ASTM E 330-02
  - ASTM E 331-00
  - AAMA 1503
- NFRC - NFRC 100-2004
  - NFRC 200-2004
  - NFRC 500-2004

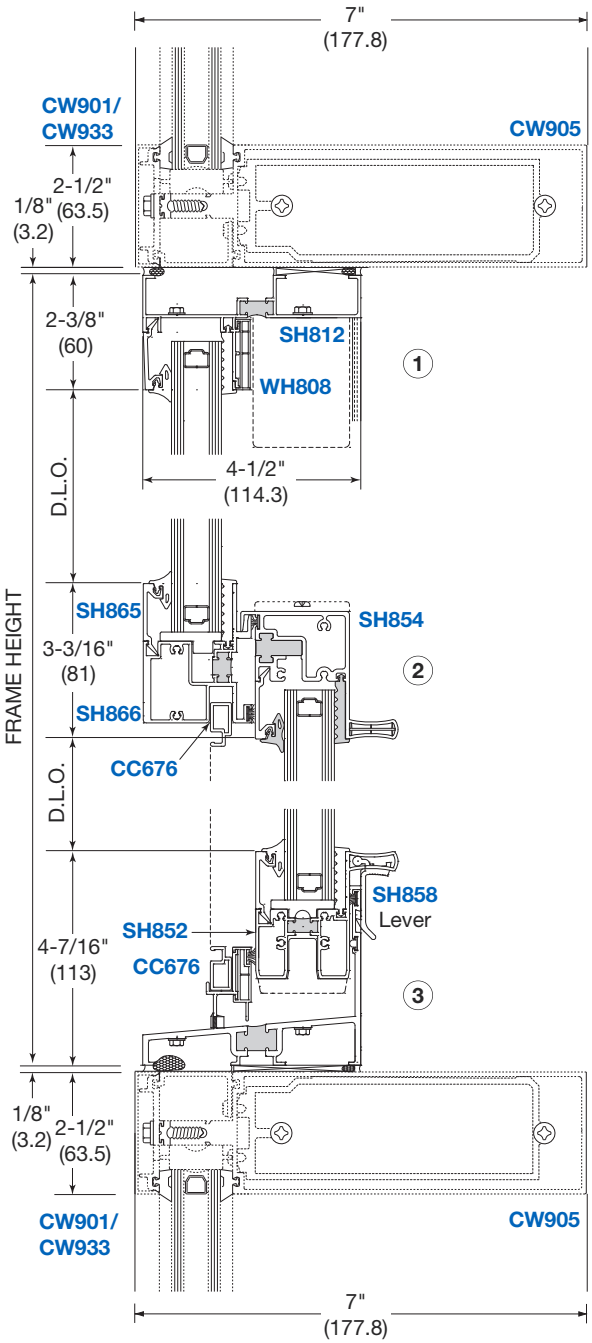

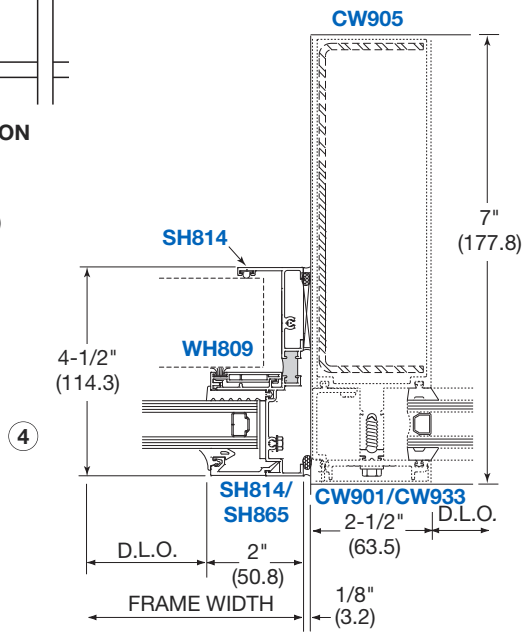

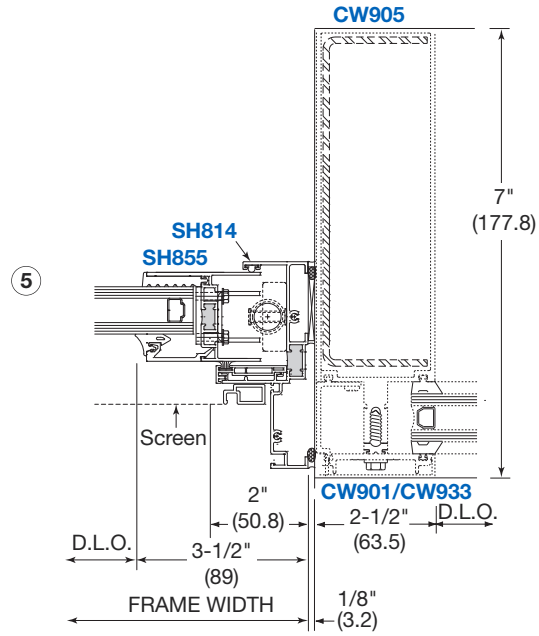

NOT TO SCALE

WINDOWS

Special Features

Fixed Window
• Series 8100

The Series 8100 Fixed Window has a 4-1/2" (114) deep frame designed to match typical building conditions, including our entrances and storefronts. An efficient thermally insulated frame accepts 1" (25) glazing. Available in an array of architectural coatings and anodized finishes.

- Tested to AAMA CW60
- Accepts 1" (25) Glazing
- Thermally Insulated-NFRC Certified
- U-Factors as Low as 0.34
- 4-1/2" (114) Deep Frame to Match Typical Building Conditions
- Choice of Block or Fin Frame
- Accessories Such as Mulling Bars, Subsills, Head and Jamb Channels are Available
- Available in an Array of Architectural Coatings and Anodized Finishes
- Made in the U.S.A.

Fixed Window

WINDOWS

Typical Details

FOR 1" (25) GLAZING

Fixed Window

• Series 8100

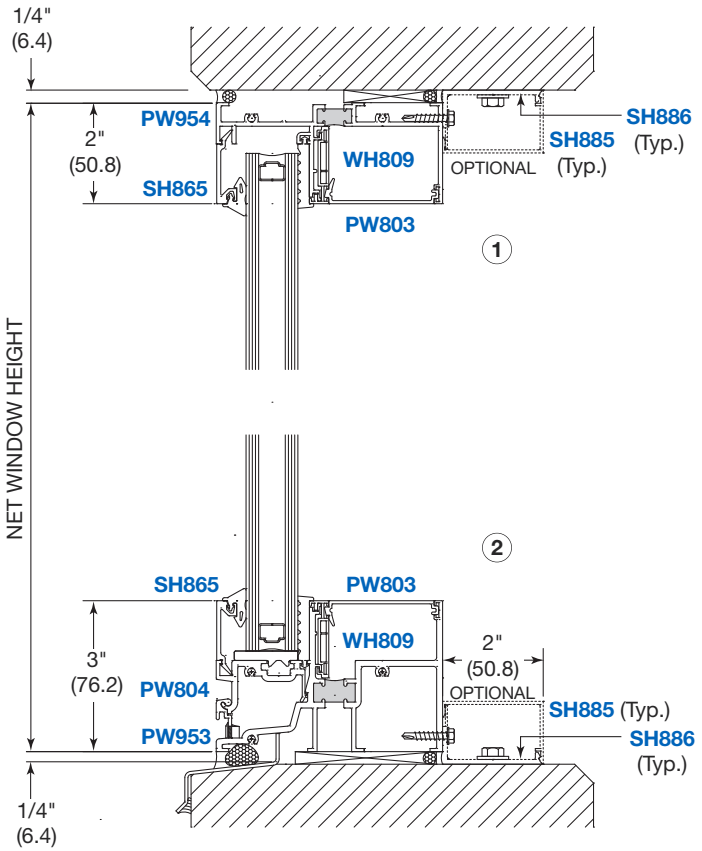

Meets or Exceeds Specifications:

- AAMA - CW60
- AAMA/WDMA/CSA 101/1.S.2/A 440 -08
  - ASTM E 283-04
  - ASTM E 330-02
  - ASTM E 331-00
  - AAMA 1503
- NFRC - NFRC 100-2004
  - NFRC 200-2004
  - NFRC 500-2004

Block Frame
Installation Method Shown

Maximum Frame Size
56" x 63" (1422 x 1600)

A complete set of details in DWG format is available at **usalum.com**

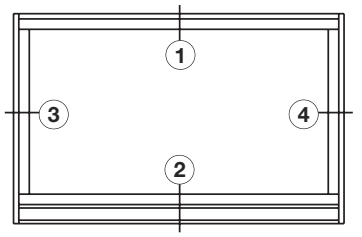

TYPICAL ELEVATION

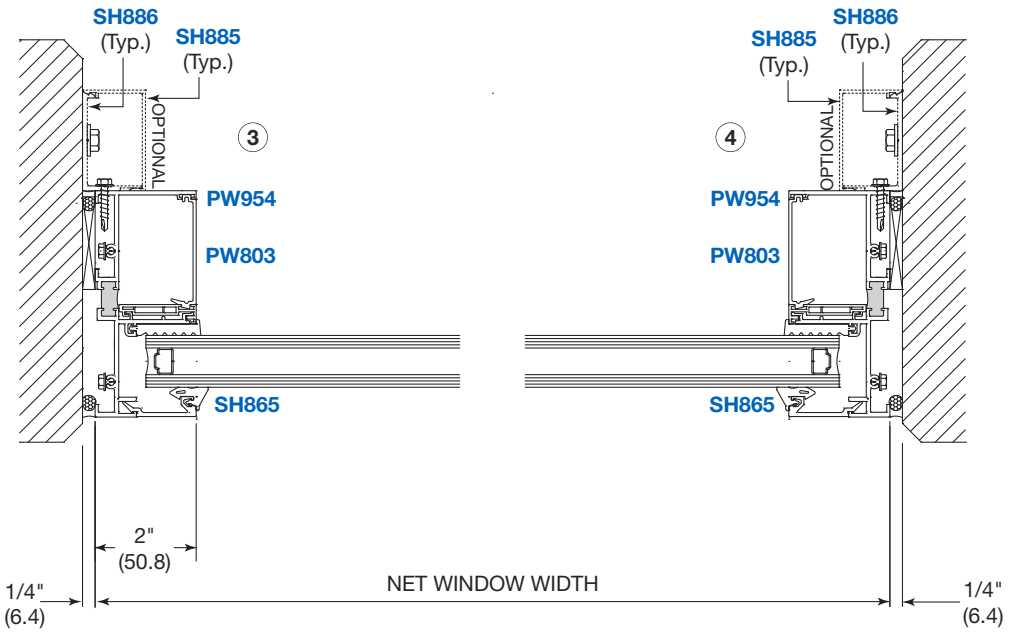

NOT TO SCALE

WINDOWS

Special Features

Sliding Window
• Series 8200

The Series 8200 Horizontal Sliding Window offers that rare combination of smooth operation, durability, and toughness. It has a 4-1/2" (114) deep frame designed to match typical building conditions, including our entrances and storefronts. An efficient thermally insulated frame accepts 1" (25) glazing. Available in an array of architectural coatings and anodized finishes.

- Tested to AAMA CW60
- Accepts 1" (25) Glazing
- Thermally Insulated-NFRC Certified
- U-Factors as Low as 0.34
- 4-1/2" (114) Deep Frame to Match Typical Building Conditions
- Choice of Block or Fin Frame
- Dry Glazed
- Self Locking Latch and Tandem Adjustable Rollers for Ease of Operation
- Accessories Such as Screens, Mulling Bars, Subsills, Head and Jamb Channels are Available
- Available in an Array of Architectural Coatings and Anodized Finishes
- Made in the U.S.A.

Horizontal Sliding Windows

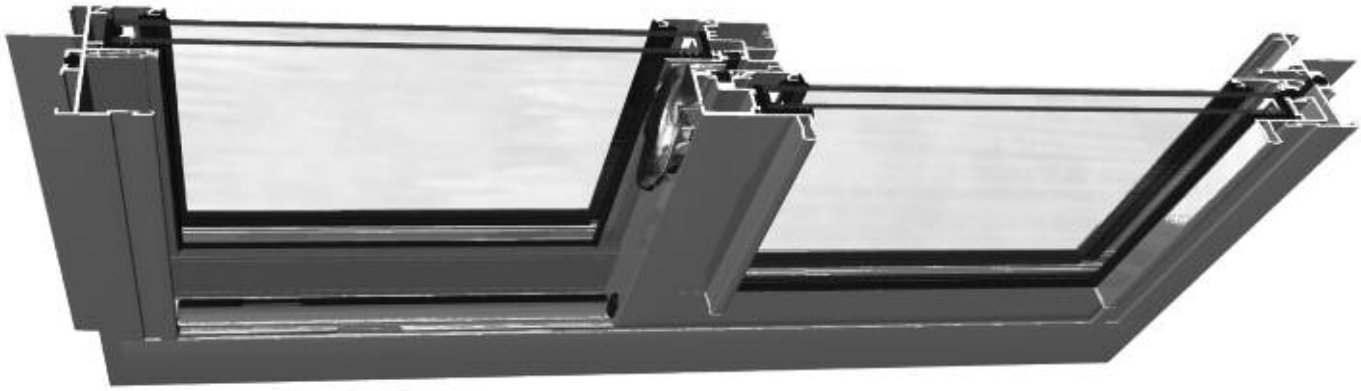

WINDOWS

Typical Details

FOR 1" (25) GLAZING

Series 8200 Horizontal Sliding Window
With Series 3250 Curtain Wall System

Horizontal Sliding Window
• Series 8200

Meets or Exceeds Specifications:

- AAMA - CW60
- AAMA/WDMA/CSA 101/1.S.2/A 440 -08
  - ASTM E 283-04
  - ASTM E 330-02
  - ASTM E 331-00
  - AAMA 1503
- NFRC - NFRC 100-2004
  - NFRC 200-2004
  - NFRC 500-2004

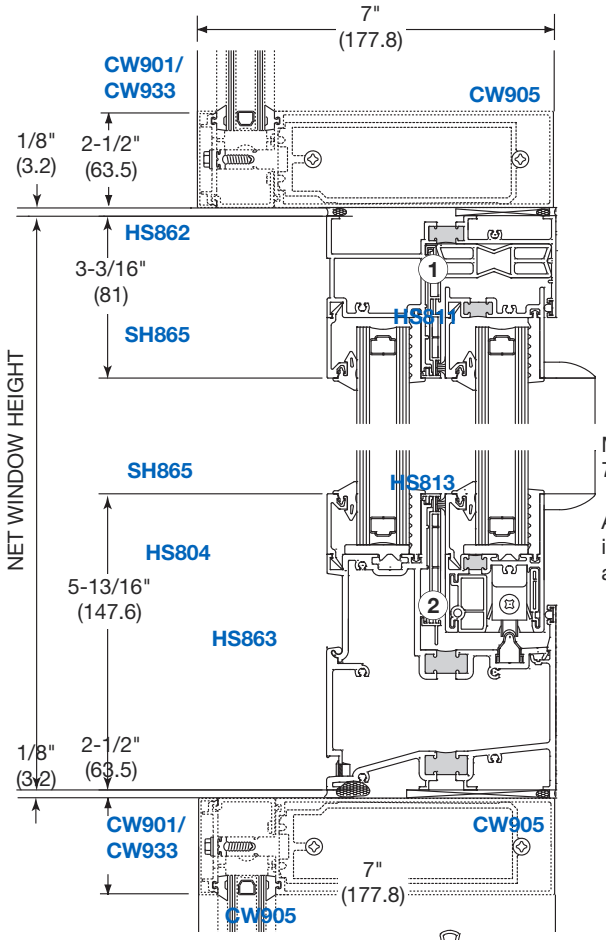

Maximum Frame Size
71" x 60" (1203 x 1524)

A complete set of details in DWG format is available at usalum.com

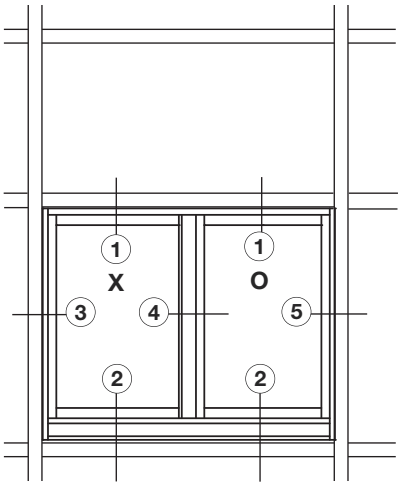

TYPICAL ELEVATION
(XO Shown, OX Opposite)

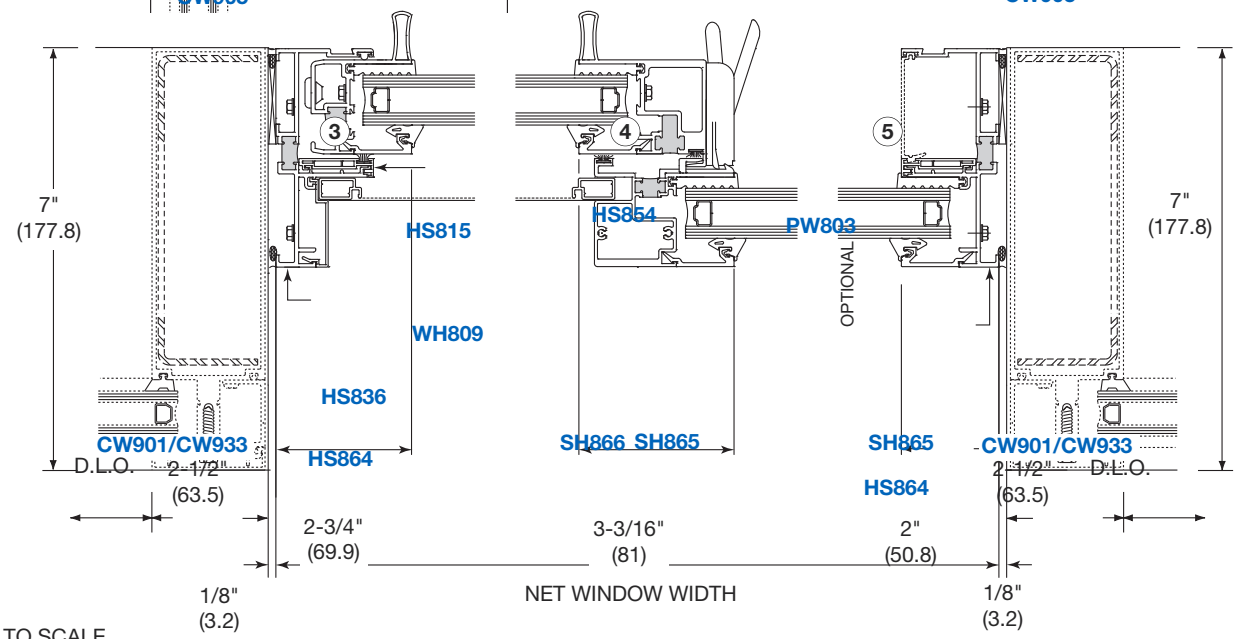

NOT TO SCALE

M

HURRICANE (IMPACT) RESISTANT SYSTEMS

- Storm Wall™ IW3250 Curtain Wall
- Series DH-350 Entrance Doors
- Series BAL-350 Terrace Doors
- Series IW7500/IW7600 IW8000/IW8100/IW8200 Windows

Toll Free Phone Service
(800) 262-5151
Ext. 5305

Toll Free Fax Service
(866) 262-3299
U.S. and Canada

CRL®
U.S. ALUMINUM

usalum.com

M HURRICANE (IMPACT) RESISTANT SYSTEMS

CRL U.S. ALUMINUM

Puerto Rico Convention Center
San Juan, PR

U.S. Aluminum Hurricane (Impact) Resistant Systems are constructed to provide essential protection in regions where impact resistant glazing systems are mandated. These systems have passed the stringent requirements of the Miami/Dade County protocols for protection from high winds and wind-borne debris.

We can design a collaboration of these variations on our Entrance, Storefront, and Curtain Wall Systems to suit the needs of retrofit or new construction in retail, commercial, and institutional facilities. An array of architectural coatings and anodized finishes can be selected to ensure these systems will meet the aesthetic demands of architects while also conforming to local and national building codes.

For a complete Glossary of Common Terms see pages 62-P1 thru 68-P1.

SYSTEM **PAGES**

- **Storm Wall™ IW3250 Curtain Wall .....01-M1 thru 14-M1**
- **Series DH-350 Entrance Doors .....01-M2 thru 07-M2**
- **Series BAL-350 Terrace Doors .....01-M3 thru 05-M3**
- **Series IW7500/IW7600/IW8000/IW8100/IW8200 Windows..01-M4 thru 14-M4**

For information or other assistance, use our toll free phone or fax service numbers from anywhere in the U.S. or Canada

Toll Free Phone (800) 262-5151 Ext. 5305 Toll Free Fax (866) 262-3299

Contact us through our web site at usalum.com

STORM WALL™

Table of Contents

Hurricane (Impact) Resistant Curtain Walls
• Series IW3250

SECTION M1 PAGE

SPECIFICATIONS ..... 02-M1 and 03-M1
TECHNICAL DATA 04-M1
SPECIAL FEATURES 05-M1
TYPICAL DETAILS FOR 7/16" (11) GLAZING 06-M1
TYPICAL DETAILS FOR 1-3/16" (30) GLAZING 07-M1
TYPICAL DETAILS WITH IG600 ENTRANCE DOOR 08-M1
TYPICAL DETAILS FOR MID-SPAN ANCHORS AND MULLION SPLICING ..... 09-M1 and 10-M1
ACCESSORIES ..... 11-M1 thru 13-M1
WINDLOAD AND DEADLOAD CHARTS 14-M1

Project: North Charleston City Hall, North Charleston , SC

Due to the diversity in state/provincial, local, and federal laws and codes that govern the design and application of architectural products, it is the responsibility of the individual architect, owner, and installer to ensure that products selected for use on projects comply with all applicable building codes and laws. U.S. Aluminum exercises no control over the use or application of its products, glazing materials, and operating hardware, and assumes no responsibility thereof.

The rapidly changing technology within the architectural aluminum products industry demands that U.S. Aluminum reserve the right to revise, discontinue or change any product line, specification or electronic media without prior written notice.

NOTE: Dimensions in parentheses ( ) are millimeters unless otherwise noted.
Other metric units shown in this publication are:

m - meter	Kg - kilogram
Pa - pascal	KPa - kilopascal
MPa - megapascal	

STORM WALL™

Specifications

Hurricane (Impact) Resistant Curtain Walls
• Series IW3250

SECTION 08 44 13 ALUMINUM CURTAIN WALL SYSTEMS

I. GENERAL DESCRIPTION
Work included: Furnish all necessary materials, labor, and equipment for the complete installation of aluminum framing as shown on the drawings and specified herein. *(Specifier Note: It is suggested that related items such as aluminum entrance doors, glass, and sealants be included whenever possible.)*
Work not included: Structural support of the framing system, interior closures, trim. *(Specifier list other exclusions). Related Work Specified Elsewhere: (Specifier list).*

QUALITY ASSURANCE
Drawings and specifications are based on the Series IW3250 Dry Glazed Curtain Wall System as manufactured by U.S. Aluminum. Whenever substitute products are to be considered, supporting technical literature, samples, drawings, and performance data must be submitted 10 days prior to bid in order to make a valid comparison of the products involved. Test reports certified by an independent test laboratory must be made available upon request.

PERFORMANCE REQUIREMENTS
Air Infiltration: Shall be tested in accordance with Dade County Protocol PA 202-94 and ASTM E 283-91 (99).
- IW3250 Storm Wall™/Curtain Wall Infiltration shall not exceed .06 cfm per square foot (.003 m3/sm2) fixed area when tested at 6.24 psf (300 Pa).
- IG500/IG600 Storm Front™ Entrance Doors Infiltration shall not exceed 1.00 cfm per square foot at 6.24 psf (300 Pa).

Water Infiltration: Shall be tested in accordance with Dade County Protocol PA 202-94 and ASTM E 331-93. No water penetration at test pressure of:
- IW3250 Curtain Wall - 15 psf
- IG500/IG600 Pair of Doors - 12 psf (Water resistant threshold)

Structural Performance: Shall be tested in Accordance with Dade County Protocol PA 220-94 and ASTM 330-96 and based on:
- Maximum deflection of L/175 of the span. [3/4" (19.1) max.]
- Allowable stress with a safety factor of 1.65. The system shall perform to this criteria under a wind load of *(Specify)* psf.
- IW3250 Curtain Wall Design 44 psf (131 mph) Structural ± 66 psf (161mph)
- IG500/IG600 Pair of Doors Design 44 psf (131 mph) Structural ± 66 psf (161 mph)

Forced Entry Resistance: Shall be tested with a 300 lb. force applied to the active door panel simultaneously with a 150 lb. force applied in both perpendicular directions to the 300 lb. force as per the Dade County Protocol PA 220-94.

Large Missile Impact Test: Shall be tested in accordance with Dade County Protocol PA 201-94 with a 9 lb. 2x4 traveling at 50 fps.

Small Missile Impact Test: Shall be tested in accordance with Dade County Protocol PA 201-94 with 10-2 gram steel ball bearings traveling 130 fps.

Cycle Load Test: Shall be tested in accordance with Dade County Protocol PA 201-94 for 9,000 cycles.
- IW3250 Curtain Wall
- IG500/IG600 Pair of Doors

Testing Procedures: ASTM 283, E 331, and E 330 - Laboratory performance testing. AAMA 503-08 - Newly installed curtain walls. AAMA 511-08 - Installed curtain walls after six months.

II. PRODUCTS MATERIALS
Extrusions shall be 6063-T5 alloy and temper (ASTM B221 alloy T5 temper). Fasteners, where exposed, shall be aluminum, stainless steel or zinc plated steel in accordance with ASTM A 164. Perimeter anchors shall be aluminum or steel, providing the steel is properly isolated from the aluminum. Glazing gaskets shall be E.P.D.M. elastomeric extrusions.

FINISH
All exposed framing surfaces shall be free of scratches and other serious blemishes. Aluminum extrusions shall be given a caustic etch followed by an anodic oxide treatment to obtain… *(Specify one of the following)*:
____#11 Clear anodic coating
____#22 Dark Bronze anodic coating
____#33 Black anodic coating
A Fluoropolymer paint coating conforming with the requirements of AAMA 2605. Color shall be *(Specify a U.S. Aluminum standard color)*.

FABRICATION
All mullions and horizontals shall have flexible (PVC) thermal break material located on exterior side of glass plane. Exterior glazing seal gasket shall be secured by extruded aluminum pressure plates fastened to main grid members. Provisions shall be made at all sealed horizontals to weep moisture accumulation to the exterior. A cover shall be snapped over pressure plate to show only a sharp, uninterrupted exterior profile. Framing members shall provide for straight-in glazing on all sides, with through sight lines and no projecting stops or face joints. Vertical and horizontal framing members shall have a nominal width of 2-1/2" (63.5). Back members depth of system shall be 5" (127). System shall provide for two-piece horizontal framing so that all fasteners at intersection horizontal and vertical members will be concealed. There shall be no exposed fasteners at perimeter sections. Entrance framing members shall be compatible with glass framing in appearance. Provide for internal drainage of infiltrated water into an extruded aluminum subsill channel where it is drained to the exterior through weep slots.

STORM WALL™

Specifications

Hurricane (Impact) Resistant Curtain Walls
• Series IW3250

SECTION 08 44 13 ALUMINUM CURTAIN WALL SYSTEMS

Glazing
- IW3250 Curtain Wall

Large missile test - 7/16" (11) heat strengthened glass with 0.100" Sentry Glas® Plus by Dupont®.
Small missile test - 7/16" (11) heat strengthened glass with 0.090" Butacite® PVB by Dupont®.
- 1-3/16" (30) Laminated Impact Glazing
- IG500/IG600 Pair of Doors

Large missile test - 9/16" (14) heat strengthened glass with 0.090" Sentry Glas® Plus by Dupont®.

Sealants
The IG500/IG600 entrance doors shall use DOW 995 structural silicone to adhere glass to the door sash.

III. EXECUTION INSTALLATION
All glass framing shall be set in correct location as shown in the details and shall be level, square, plumb, and in alignment with other work in accordance with the manufacturer's installation instructions and approved shop drawings. All joints between framing and the building structure shall be sealed in order to secure a watertight installation.

PROTECTION AND CLEANING
After installation the General Contractor shall adequately protect exposed portions of aluminum surfaces from damage by grinding and polishing compounds, plaster, lime, acid, cement, or other contaminants. The General Contractor shall be responsible for final cleaning.

Project: Puerto Rico Convention Center, San Juan, PR

STORM WALL™

Technical Data

Hurricane (Impact) Resistant Curtain Walls
• Series IW3250

Strength, versatility, and economics make Series IW3250 High Impact Resistant Curtain Wall an industry standard for low to mid-rise applications where protection from high winds and wind-borne debris is required. Series IW3250 is thermally improved by a continuous thermal spacer interlocked with the horizontal and vertical pressure plates. Dual colors can be achieved by specifying different finishes for the exterior face covers and interior mullions. Two piece horizontals and extruded shear blocks allow for a concealed horizontal to vertical joint. These joint intersections also have concealed injection molded plastic end dams for controlling any infiltrated water.

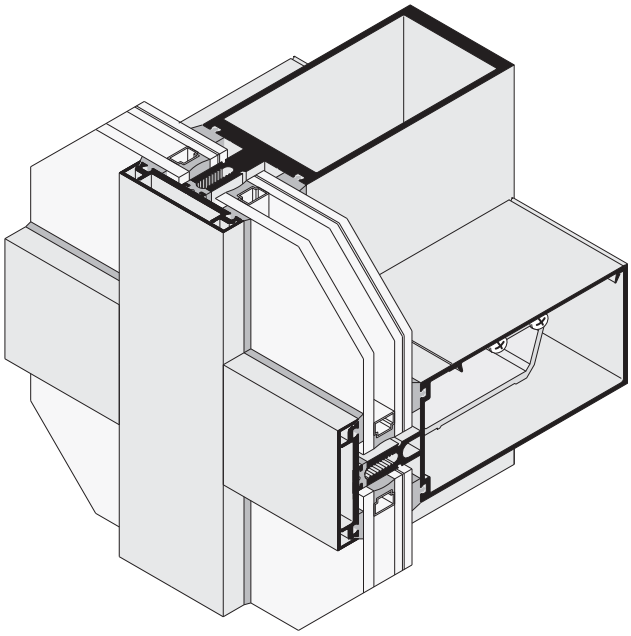

SERIES IW3250
Impact Resistant Curtain Walls

SERIES	WIDTH	OVERALL DEPTH	GLAZING INFILL	APPLICATIONS
IW3250	2-1/2" (63.5)	6-1/4" (158.8)	7/16" (11)	Low-Rise to Mid-Rise Buildings Where Impact Resistant Specifications are Required.
	2-1/2" (63.5)	7" (177.8)	1-3/16" (30)	

GLASS SIZES*	
Glass Width and Height	= Daylight Opening + 1-5/8" (41.3)

* These formulae do not take into account glass tolerances. Consult glass manufacturer before ordering glass.

STORM WALL™

Special Features

Hurricane (Impact) Resistant Curtain Walls
• Series IW3250

The Series IW3250 Curtain Wall System has been engineered specifically to withstand high winds and wind-borne debris, now required in glass wall systems used in coastal areas. IW3250 is an extension of the Series 3250 curtain wall system utilizing many of the same components and assembly procedures. IW3250 requires that impact resistant glass be used, either 7/16" (11) or 1-3/16" (30) laminated glass.

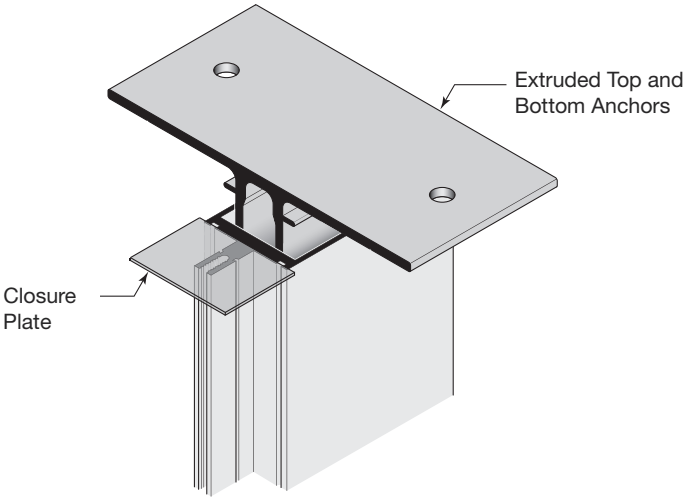

Injection Molded Closure Plates at top and bottom of verticals prevents perimeter seal failure. Easily installed Top and Bottom Anchors facilitate a quick and accurate installation. See pages 12-M1 and 13-M1 for more information.

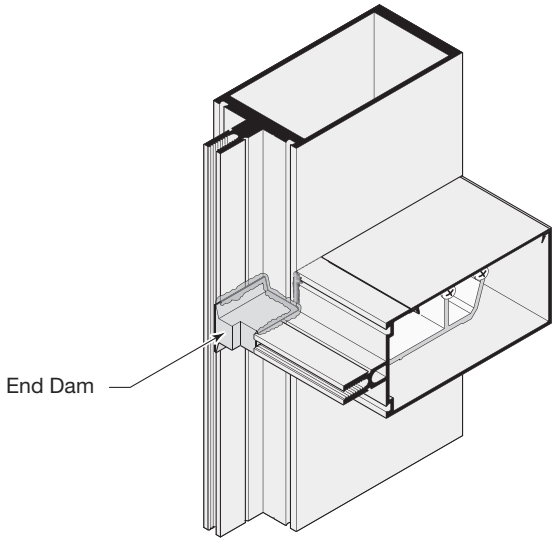

Injection Molded End Dams at vertical and horizontal intersections control any infiltrated water. See page 13-M1 for more information.

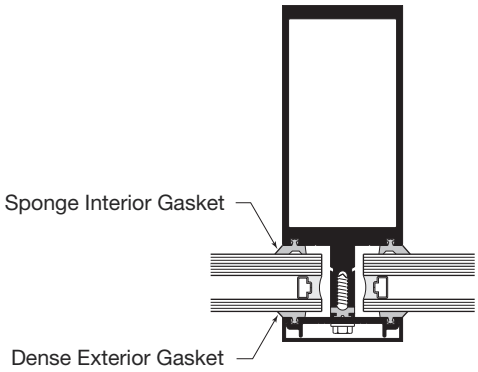

Unlike other Impact Resistant Wall Systems that require structural silicone to hold the glass in place, IW3250 utilizes Gaskets, offering a much faster and more economical installation without sacrificing system integrity. See page 12-M1 for more information.

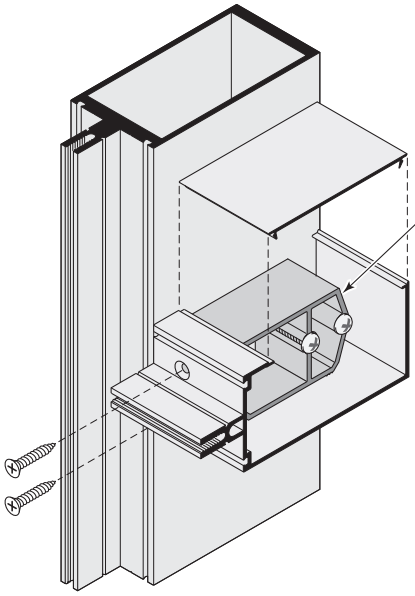

Extruded aluminum Shear Blocks for tight horizontal to vertical joinery with no exposed screws. See page 13-M1 for more information.

NOTE: To accelerate installation times with pinpoint accuracy of Horizontal Shear Blocks to Curtain Wall Mullions see pages 56-P1 and 57-P1.

STORM WALL™

Typical Details

Hurricane (Impact) Resistant Curtain Walls
• Series IW3250

VERTICAL AND HORIZONTALS FOR 7/16" (11) LAMINATED IMPACT GLAZING

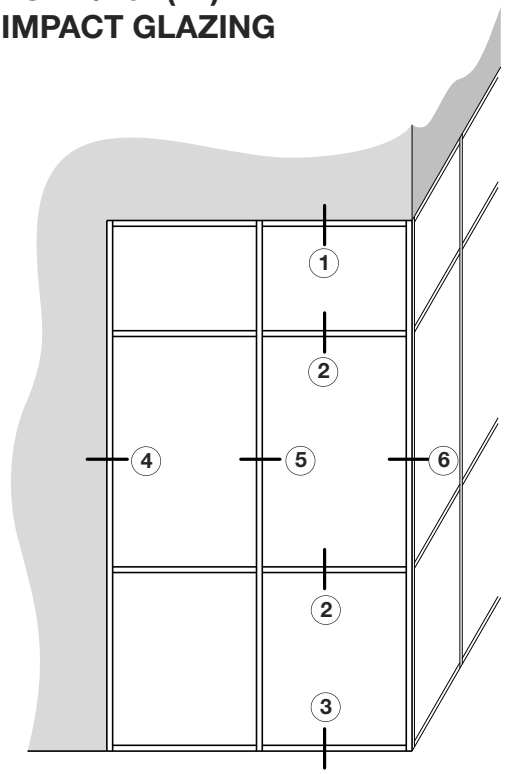

TYPICAL ELEVATION

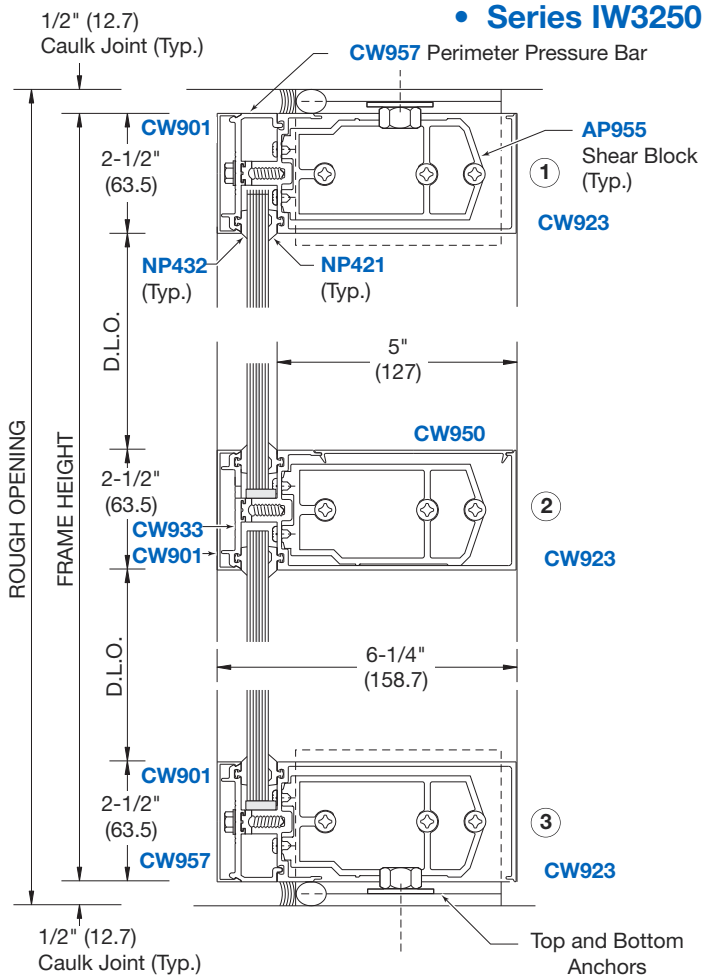

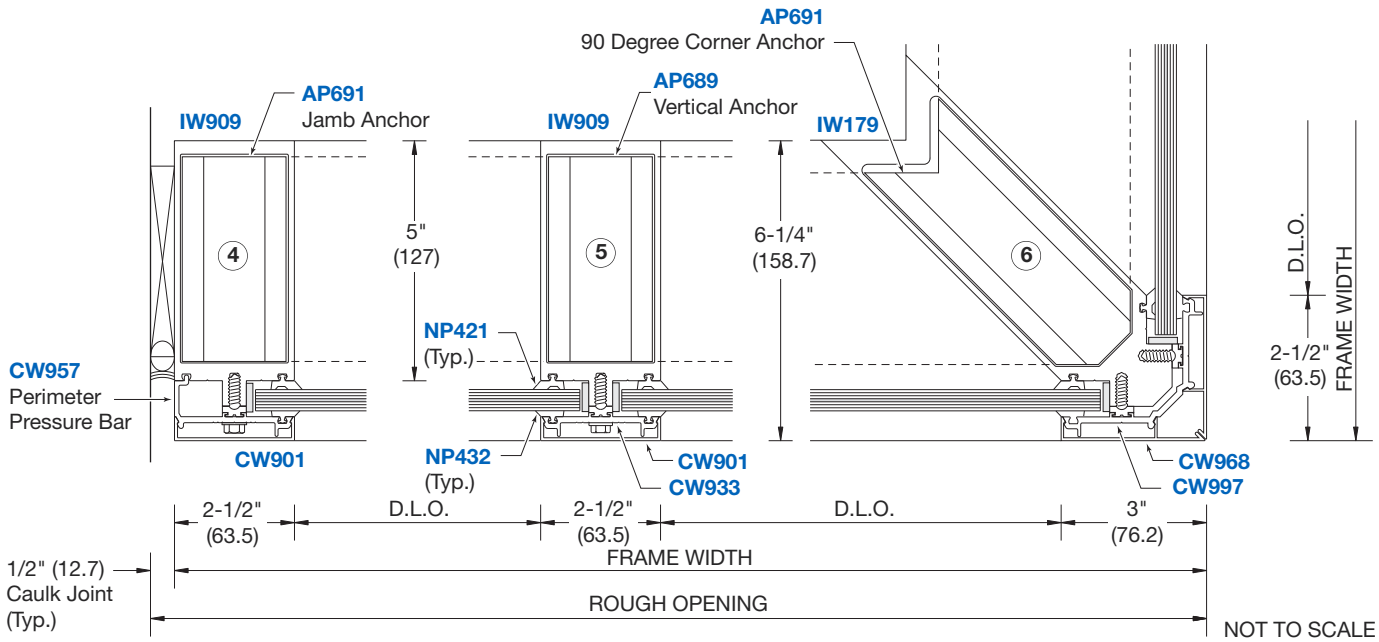

CRL U.S. ALUMINUM

STORM WALL™

Typical Details

Hurricane (Impact) Resistant Curtain Walls • Series IW3250

VERTICAL AND HORIZONTALS FOR 1-3/16" (30) LAMINATED IMPACT GLAZING

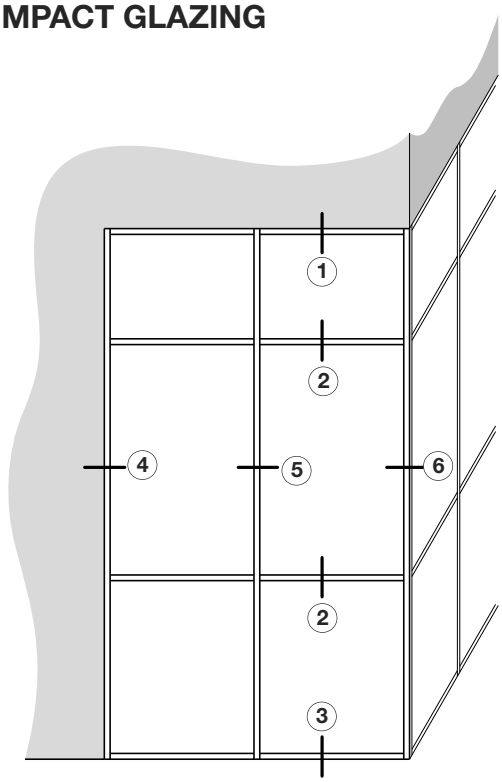

TYPICAL ELEVATION

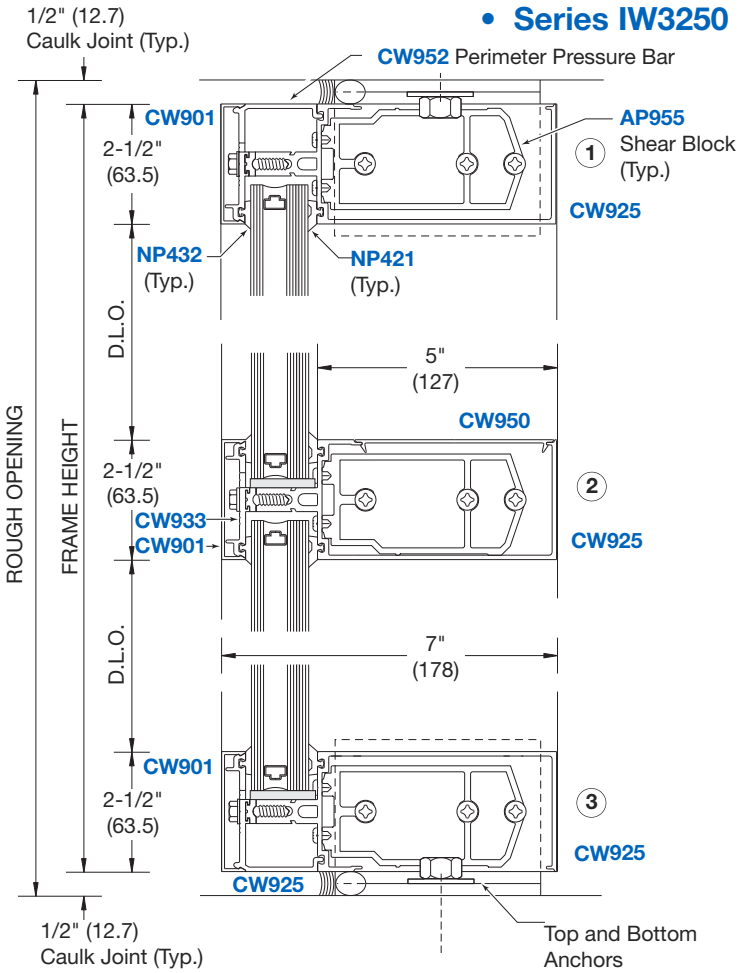

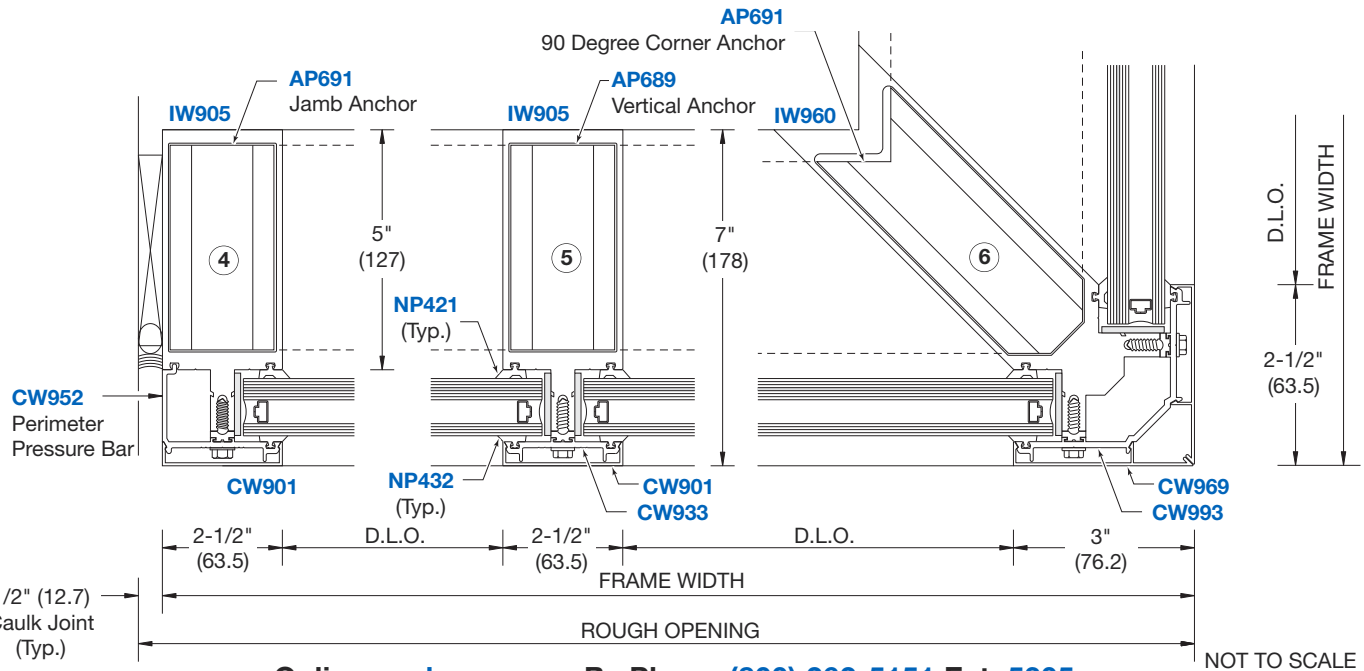

STORM WALL™

Typical Details

Hurricane (Impact) Resistant Curtain Walls
• Series IW3250

DOOR FRAMING FOR 1-3/16" (30) GLAZING

Series IW3250 Curtain Wall Shown with Series IG600 Entrance Door.

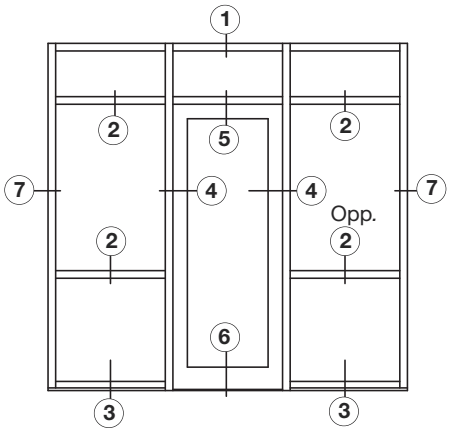

TYPICAL ELEVATION

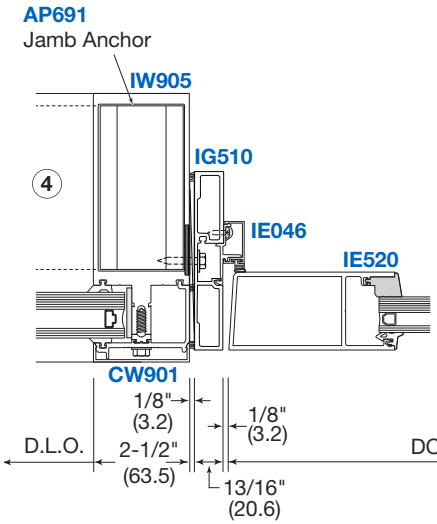

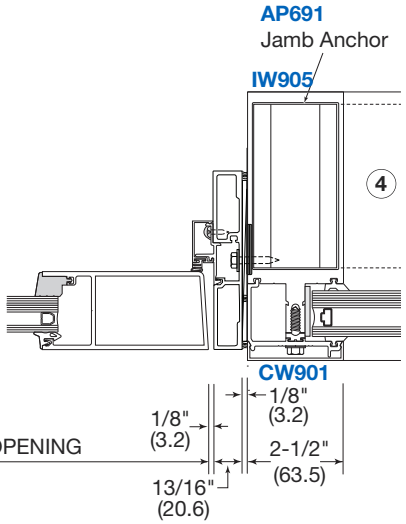

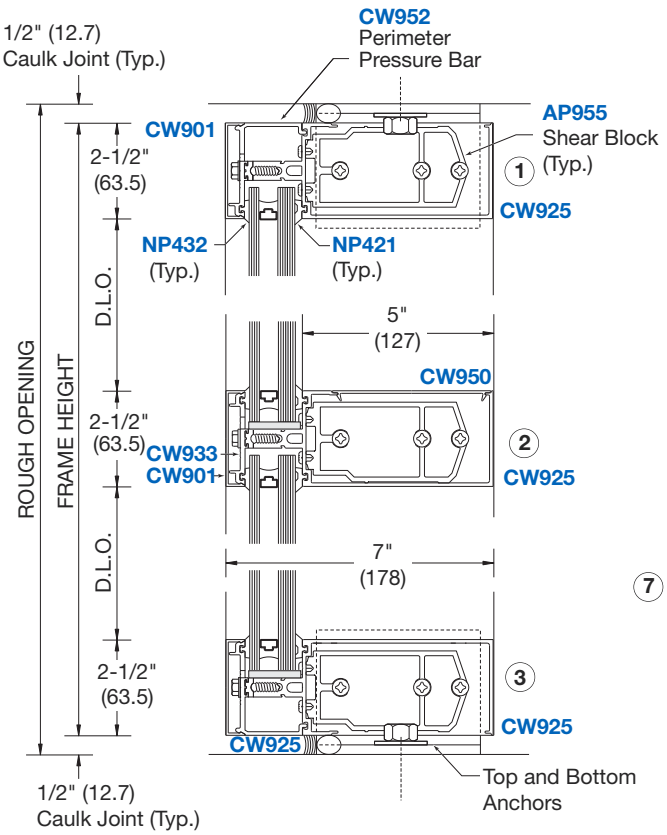

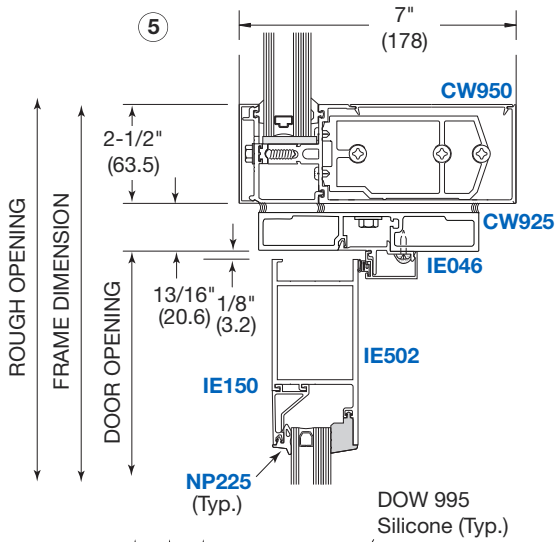

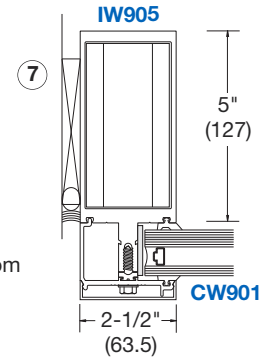

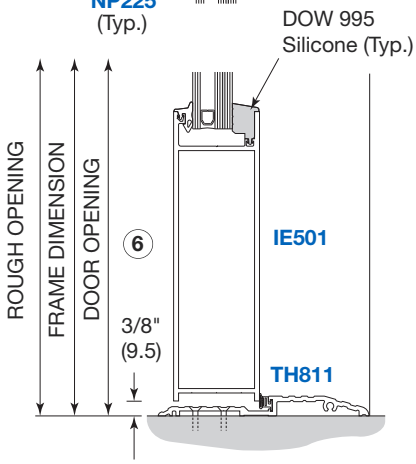

STORM WALL™

Typical Details

Hurricane (Impact) Resistant Curtain Walls
• Series IW3250

MID-SPAN ANCHORS AND MULLION SPLICE

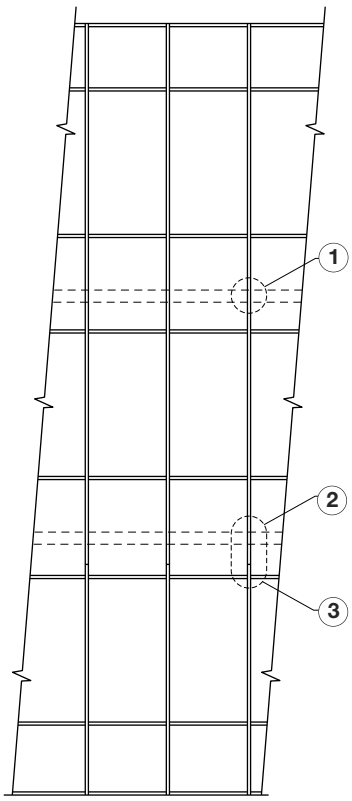

TYPICAL ELEVATION

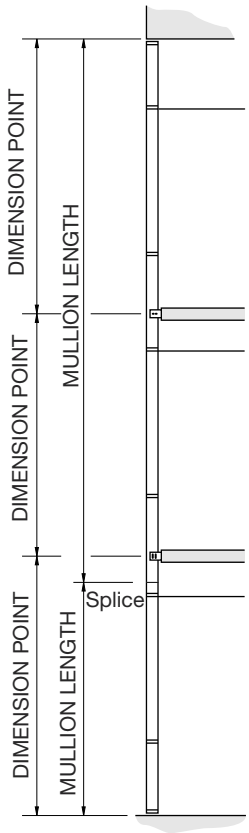

SECTION DETAIL

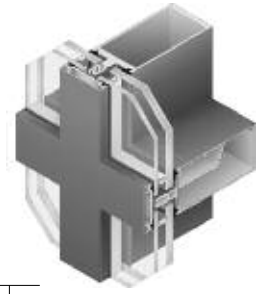

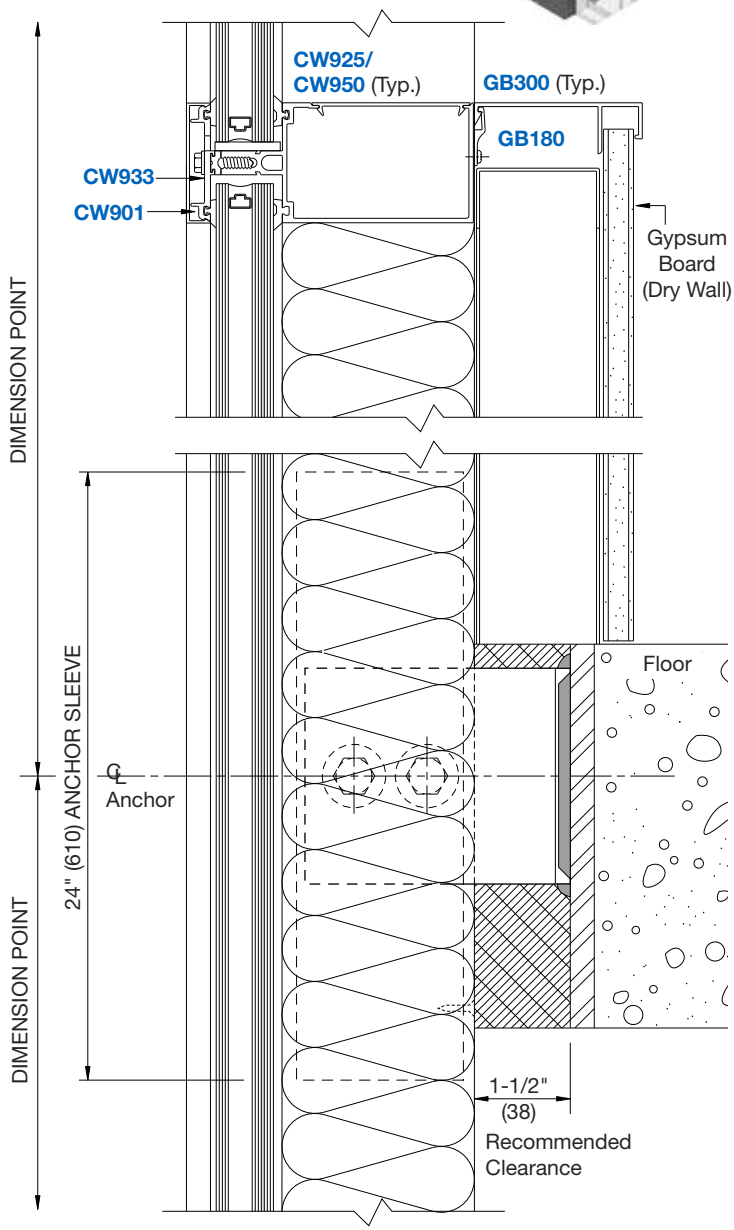

1

DEADLOAD ANCHOR

NOT TO SCALE

STORM WALL™

Typical Details

MID-SPAN ANCHORS AND MULLION SPLICE

Hurricane (Impact) Resistant Curtain Walls
• Series IW3250

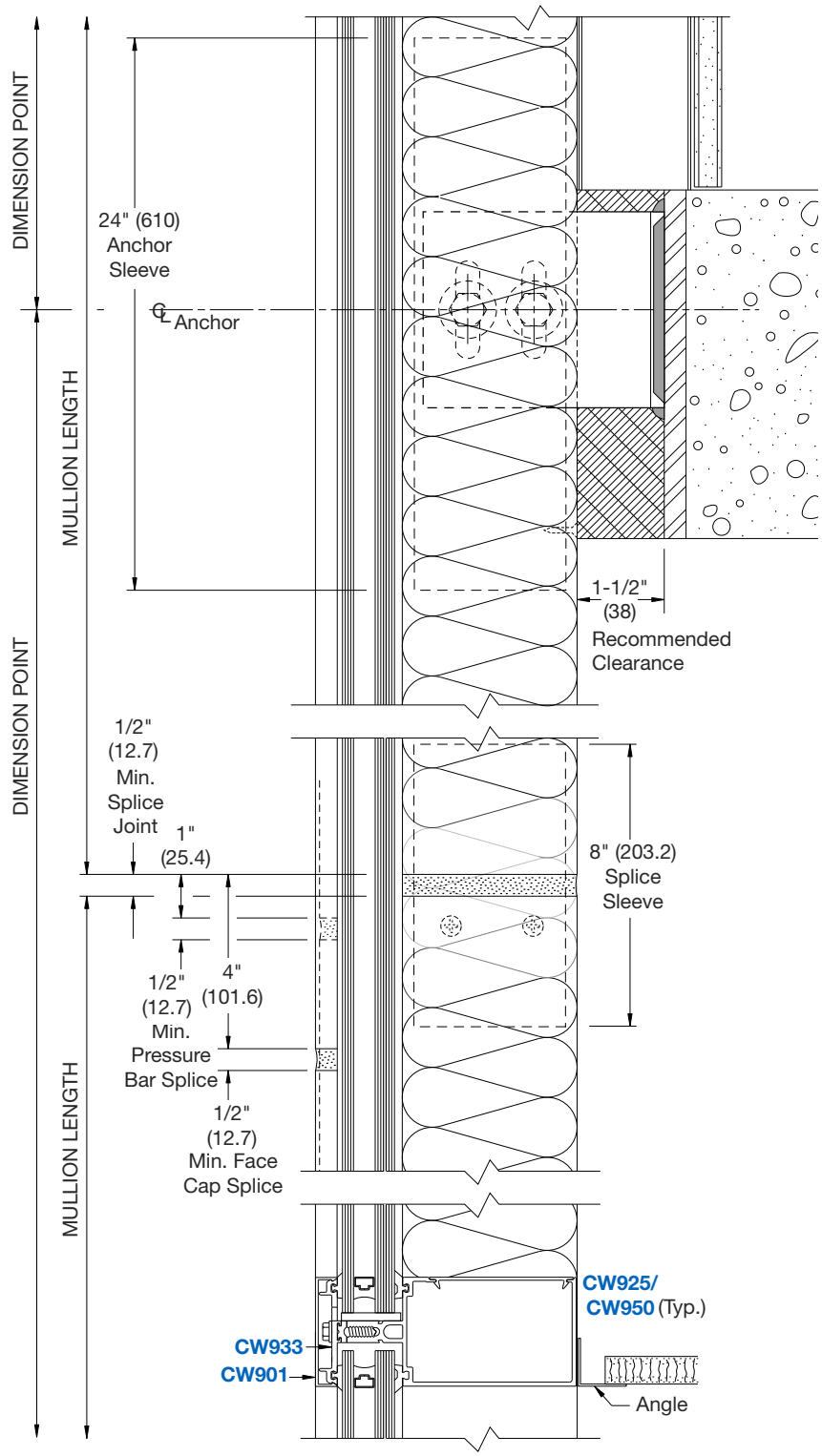

② **EXPANSION ANCHOR (WINDLOAD ANCHOR)**

NOTE: Anchor Type and Size Varies Per Job Requirements.

③ **SPLICE JOINT**

NOTE: Joint Width Should be Based on Mullion Length and Temperature Differential. A 1/2" (12.7) Gap Allows for 1/4" (6.4) Movement.

NOT TO SCALE

CRL U.S. ALUMINUM

STORM WALL™

Accessories

Hurricane (Impact) Resistant Curtain Walls
• Series IW3250

MID-SPAN ANCHORS

PART NO.	DESCRIPTION	PKG. QTY.	FOR GLAZING INFILLS	
			7/16" (11)	1-3/16" (30)
AP681	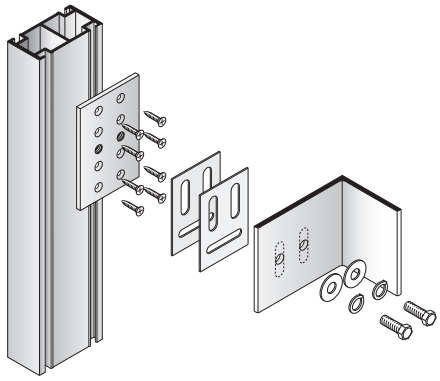 **Anchor for Wall Jamb** **Includes:** (1) TB681 Aluminum Tapping Bar (2) AP360 Nylatron Slip Pads (2) MF335 1/2 -13 x 1-1/2" (38.1) GR-5 HH Bolts (2) MF257 Flat Washers (2) MF258 Lock Washers (8) ST277 #12 x1" (25) FH Screws (1) SL907 Reinforcement Insert	6	●	●
AP682	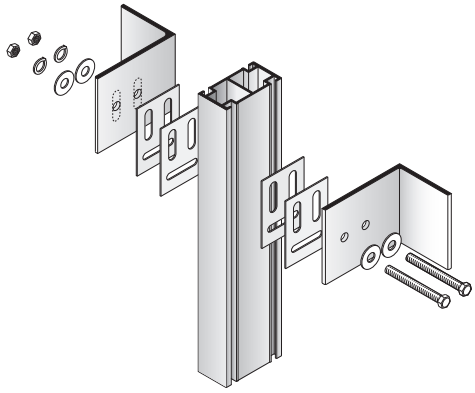 **Anchor for Intermediate Vertical** **Includes:** (4) AP360 Nylatron Slip Pads (2) MF351 1/2 -13 x 4-1/2" (114.3) GR-5 HH Bolts (4) MF257 Flat Washers (2) MF258 Lock Washers (2) MF261 1/2 -13 Hex Nut w/Nylon Lock (1) SL907 Reinforcement Insert	12	●	●
AP683	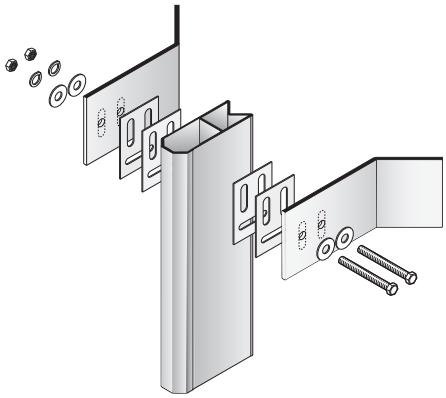 **Anchor for Corner Vertical** **Includes:** (4) AP360 Nylatron Slip Pads (2) MF351 1/2 -13 x 4-1/2" (114.3) GR-5 HH Bolts (4) MF257 Flat Washers (2) MF258 Lock Washers (2) MF261 1/2 -13 Hex Nut w/Nylon Lock (1) SL977 Reinforcement Insert	6	●	●

M

STORM WALL™

Accessories

Hurricane (Impact) Resistant Curtain Walls
• Series IW3250

PART NO.	DETAIL	DESCRIPTION	PKG. QTY.	FOR GLAZING INFILLS	
				7/16" (11)	1-3/16" (30)
AP689	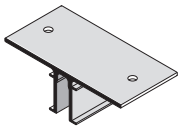	Intermediate Mullion Anchor	12	●	●
AP691	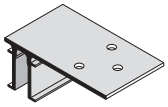	Wall Jamb Anchor	6	●	●
AP690	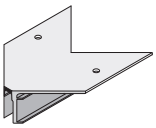	Corner Mullion Anchor	6	●	●
SL909		Mullion Splice Sleeve	12	●	●
SL979	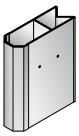	Corner Mullion Splice Sleeve	5	●	●
NP432	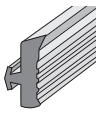	Exterior Gasket	500' Roll	●	●
NP421	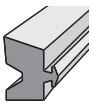	Interior Gasket	500' Roll	●	●
CW368	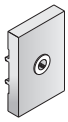	Temporary Glass Retainer	50	●	●
WB902	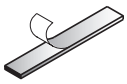	Edge Block for 7/16" (11) Glass; 5/8" x 4" (15.9 x 101.6)	50	●	
SB902	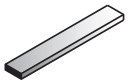	Setting Block for 7/16" (11) Glass; 1/2" x 4" (12.7 x 101.6)	100	●	
WB901	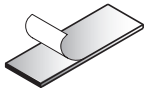	Edge Block for 1-3/16" (30) Glass; 1-3/8" x 4" (34.9 x 101.6)	50		●
SB901	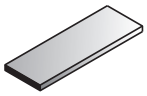	Setting Block for 1-3/16" (30) Glass; 1-3/8" x 4" (34.9 x 101.6)	100		●

CRL U.S. ALUMINUM

STORM WALL™

Accessories

Hurricane (Impact) Resistant Curtain Walls
• Series IW3250

PART NO.	DETAIL	DESCRIPTION	PKG. QTY.	FOR GLAZING INFILLS	
				7/16" (11)	1-3/16" (30)
AP695		Shear Block (Includes Screws)	20	●	●
AP696	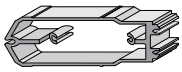	Corner Shear Block (Includes Screws)	8	●	●
HD973		End Dam for 7/16" (11) Glass	50	●	
HD975	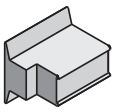	End Dam for 1-3/16" (30) Glass	50		●
CP925	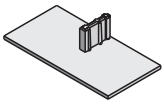	Closure Plate for 7/16" (11) Glass	50	●	
CP965	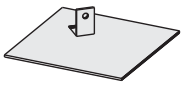	Corner Closure Plate for 7/16" (11) Glass	10	●	
CP900	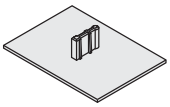	Closure Plate for 1-3/16" (30) Glass	50		●
CP901	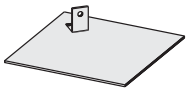	Corner Closure Plate for 1-3/16" (30) Glass	10		●
MS212		Screw for Pressure Bar for 7/16" (11) Glass; 1/4"-20 x 3/4" (19) HWHCS with SRG5	200	●	
MS222	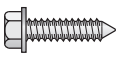	Screw for Pressure Bar for 1-3/16" (30) Glass; 1/4"-20 x 1" (25) HWHCS with SRG5	200		●
DJ960	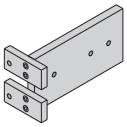	Drill Jig for Vertical Mullions	1	●	●

M

STORM WALL™

Windload Charts
FOR VERTICALS

Hurricane (Impact) Resistant Curtain Walls
• Series IW3250

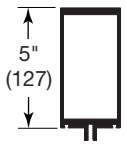

IW909 for 7/16" (11)
Laminated Impact Glazing
Ixx = 11.122 (452.98 x 10^4)
Sxx = 3.983 (65.26 x 10^3)

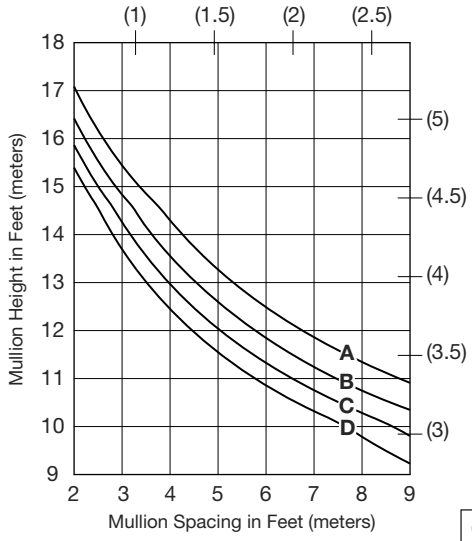

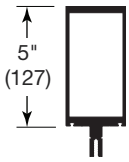

IW905 for 1-3/16" (30)
Laminated Impact Glazing
Ixx = 13.795 (574.25 x 10^4)
Sxx = 4.501 (73.75 x 10^3)

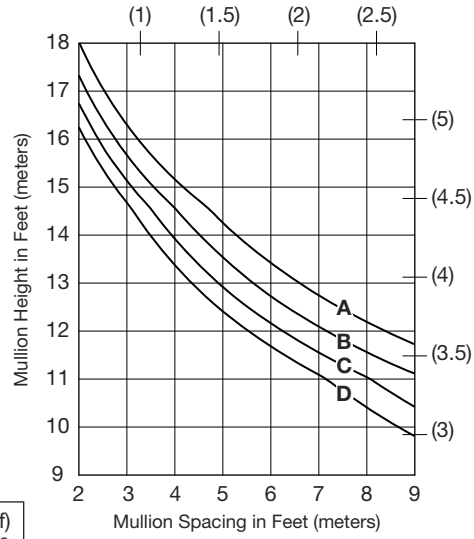

CURVES **A** = 106 mph wind (29 psf)
CURVES **B** = 115 mph wind (34 psf)
CURVES **C** = 123 mph wind (39 psf)
CURVES **D** = 130 mph wind (44 psf)

Deadload Charts
FOR HORIZONTALS

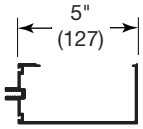

CW923 for 7/16" (11)
Laminated Impact Glazing
Iyy = .851 (35.42 x 10^4)

Glass weight calculated at 5 psf.
(2) 3/16" Glass + (1) .1" laminate interlayer.

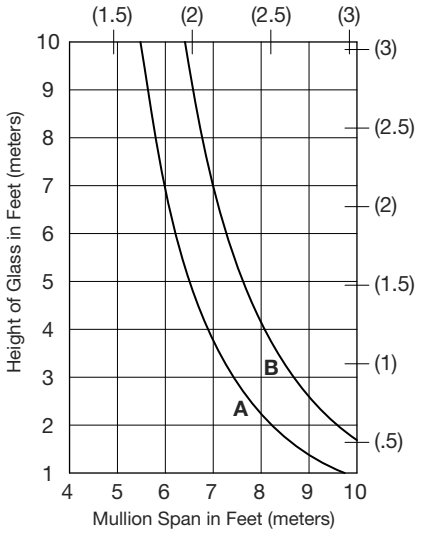

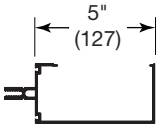

CW925 for 1-3/16" (30)
Laminated Impact Glazing
Iyy = .934 (38.88 x 10^4)

Glass weight calculated at 8.25 psf.
(1) 1/4" Glass + 1/2" Air + (2) 1/8" Glass + (1) .030" laminate interlayer.

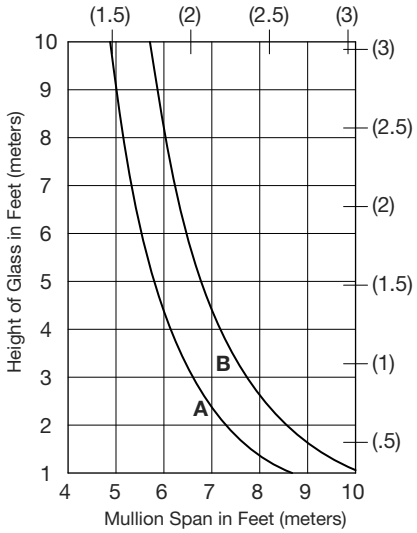

Curve **A** for 1/4 point setting block locations

Curve **B** for 1/8 point setting block locations

STORM FRONT™

Table of Contents

Hurricane (Impact) Resistant Entrance Doors
• Series DH-350

Storm Front™

SECTION M2 PAGE

SPECIFICATIONS 02-M2
TECHNICAL DATA.....03-M2
TYPICAL DETAILS .....04-M2 and 05-M2
DOOR FRAMES 06-M2
ACCESSORIES 07-M2

Project: Adrienne Arsht Center for Performing Arts, Miami, FL

Due to the diversity in state/provincial, local, and federal laws and codes that govern the design and application of architectural products, it is the responsibility of the individual architect, owner, and installer to ensure that products selected for use on projects comply with all applicable building codes and laws. U.S. Aluminum exercises no control over the use or application of its products, glazing materials, and operating hardware, and assumes no responsibility thereof.

The rapidly changing technology within the architectural aluminum products industry demands that U.S. Aluminum reserve the right to revise, discontinue or change any product line, specification or electronic media without prior written notice.

NOTE: Dimensions in parentheses ( ) are millimeters unless otherwise noted.
Other metric units shown in this publication are:

m - meter	Kg - kilogram
Pa - pascal	KPa - kilopascal
MPa - megapascal	

STORM FRONT™

Specifications

SECTION 08 39 80
HURRICANE RESISTANT DOORS

Hurricane (Impact) Resistant Entrance Doors
• Series DH-350

NOA: 10-0121.10 Out-Swing
NOA: 08-0618.06 In-Swing

SERIES	FACE WIDTH	DEPTH	GLAZING INFILL	GLAZING METHOD
DH-350	3-3/4" (95.3)	2" (50.8)	9/16" (14)	Wet Glaze

I. GENERAL DESCRIPTION

Work Included: Furnish all necessary materials, labor, and equipment for the complete installation of aluminum framing as shown on the drawings and specified herein. *(Specifier Note: It is suggested that related items such as aluminum entrance doors, glass, and sealants be included whenever possible.)*
Work Not Included: Structural support of the framing system, interior closures, trim. *(Specifier list other exclusions).*
Related Work Specified Elsewhere: *(Specifier list).*

QUALITY ASSURANCE

Drawings and specifications are based on the U.S. Aluminum Series DH-350 System. Whenever substitute products are to be considered, supporting technical literature, samples, drawings, and performance data must be submitted 10 days prior to bid in order to make a valid comparison of the products involved. Test reports certified by an independent test laboratory must be made available upon request.

PERFORMANCE REQUIREMENTS

Air Infiltration: 0.050 cfm/sq. ft at a pressure differential of 6.24 psf.
Forced Entry Resistance:
AAMA 1304. Dade County Protocol TAS-201, 202, and 203: Meets all Miami-Dade County, Florida air, structural, and impact requirements. Large and Small Missile Impact Test: Maximum design pressure of +100 psf to -100 psf.

II. PRODUCTS MATERIALS

Extrusions shall be 6063-T5 alloy and temper (ASTM B221 alloy T6 temper). Fasteners, where exposed, shall be aluminum, stainless steel or zinc plated steel in accordance with ASTM A 164. Perimeter anchors shall be aluminum or steel, providing the steel is properly isolated from the aluminum. Glazing gaskets shall be E.P.D.M. elastomeric extrusions.

FINISH

All exposed framing surfaces shall be free of scratches and other serious blemishes. Aluminum extrusions shall be given a Kynar 500 AAMA 2605 paint. *(Specify one of the following):*
_____Bone White
_____Statuary Bronze
_____Kynar 500 (special order)
with the requirements of AAMA 2605. Color shall be *(Specify).*
Class 1 anodized extrusions shall be given a caustic etch followed by a anodic oxide treatment to obtain...
_____Bronze Anodize
_____Clear Anodize

FABRICATION

Vertical and horizontal framing members shall have a nominal face dimension of 1-3/4" x 5" x 1/8" thick (44 x 127 x 3.2).

GLAZING

Dade County
- DH-350 Single Door - 9/16" (14) Heat strengthened with SentryGlas® Plus interlayer
- DH-350 Pair of Doors - 9/16" (14) Heat strengthened with SentryGlas® Plus interlayer.

SEALANTS

All metal to metal joints shall use DOW 795 Silicone.

III. EXECUTION INSTALLATION

All glass framing shall be set by a qualified installer in correct locations as shown in the details and shall be level, square, plumb, and in alignment with other work in accordance with the manufacturer's installation instructions and approved shop drawings. All joints between framing and the building structure shall be sealed in order to secure a watertight installation.

PROTECTION AND CLEANING

After installation the General Contractor shall adequately protect exposed portions of aluminum surfaces from damage by grinding and polishing compounds, plaster, lime, acid, cement, or other contaminants. The General Contractor shall be responsible for final cleaning.

IV. OPTIONS

- Concealed Overhead Closers
- Exposed Heavy-Duty Closers

STORM FRONT™

Technical Data

Hurricane (Impact) Resistant Entrance Doors
• Series DH-350

The DH-350 is a High Performance Hurricane Resistant Storefront Entrance Door designed for all commercial entrance applications including retail space, hotels, condominiums, office buildings, institutional facilities, and industrial structures. The DH-350 complies with the stringent requirements of Florida's Miami-Dade County Building Codes, making it the top choice for installation in areas ravished by hurricanes. The DH-350 is intended to be installed in punched openings or as a liner frame within other U.S. Aluminum Impact Framing Systems.

Series DH-350 Hurricane Resistant Out-Swing Medium Stile Entrance (Exterior View)

Standard Features:
- Factory Pre-Glazed With Structural Silicone
- Standard Panel Sizes: 36" x 84" (914 x 2137) for Single Doors
  72" x 84" (1829 x 2137) for Pairs of Doors
  36" x 96" (914 x 2438) for Single Doors
  72" x 96" (1829 x 2438) for Pairs of Doors
- Heavy Commercial Grade
- 8" (203.2) Bottom Rail
- Heavy-Duty Internal Corner Clips
- 1" x 5" (25 x 127) or 1-3/4" x 5" (44.5 x 127) Door Frame
- 0.125 Nominal Wall Thickness, Door, and Frame
- 1-1/2 Pair of 4" x 4-1/2" (101.6 x 114.3) Mortised Aluminum Butt Hinges with Non-Removable Stainless Steel Hinge Pins for 3070 / 6070 Doors
- Two Pairs of 4" x 4-1/2" (101.6 x 114.3) Mortised Aluminum Butt Hinges with Non-Removable Stainless Steel Hinge Pins for 3080 / 6080 Doors
- Double Rows of Weather Seals
- Three-Point Locking System with Cylinder and Thumbturn Included
- Standard Push/Pull Set 1" (25) Round US28 Finish
- Non-Removable Interior Glass Stops
- Wet Glazing Method
- Three Color Option

Series DH-350 Hurricane Resistant In-Swing Medium Stile Entrance (Exterior View)

Options:
- Custom Finishes: AAMA 2605 Compliant Painted Finishes
- Concealed Overhead Closers
- Exposed Heavy-Duty Closer for Coastal and High Wind Zones
- Glass Tint Available as Selected by the Architect/Owner
- CRL Jackson Concealed Panic Exit Device
- Open for Glazing by Customer
- Glass: Large Missile 9/16" (14) Laminated Impact Glass 0.090" Interlayer SGP by Dupont; Laminated Glass Composition: 1/4" (6) Heat-Strengthened Laminated with 0.090" SentryGlas® Plus Interlayer and 1/4" (6) Heat-Strengthened Glass

STORM FRONT™

Typical Details

Hurricane (Impact) Resistant Entrance Doors
• Series DH-350

OUT-SWING DOORS AND FRAMES

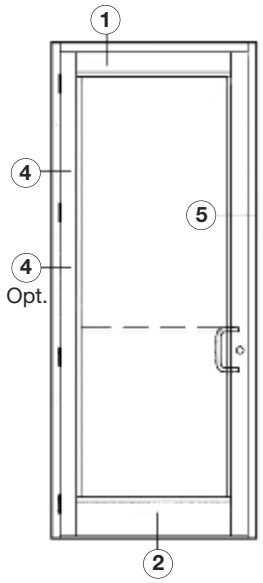

TYPICAL ELEVATION
OUT-SWING SINGLE DOOR

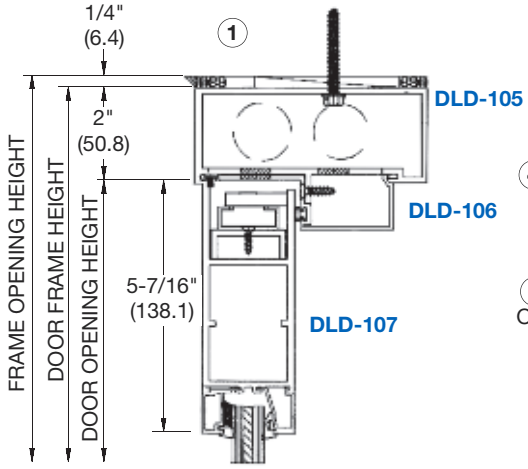

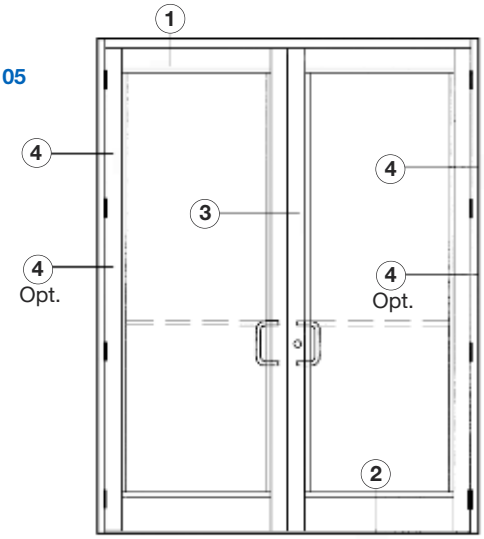

TYPICAL ELEVATION
OUT-SWING PAIR OF DOORS

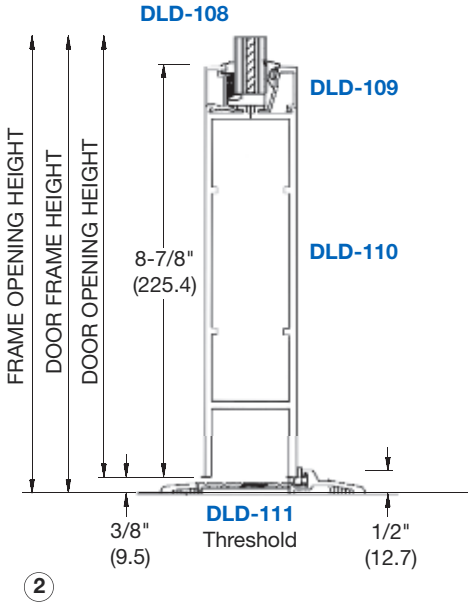

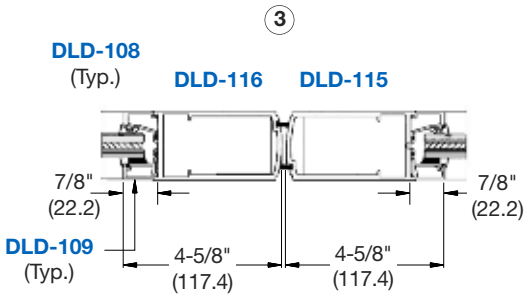

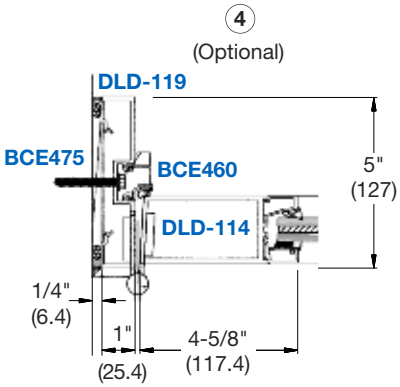

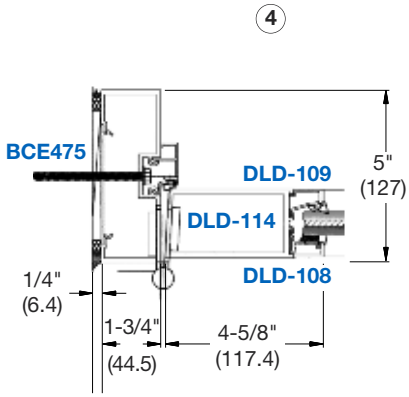

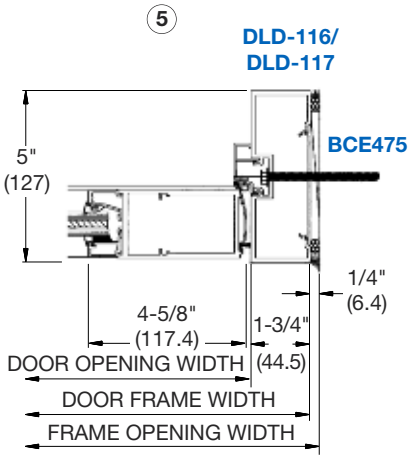

NOT TO SCALE

CRL U.S. ALUMINUM

STORM FRONT™

Typical Details

Hurricane (Impact) Resistant Entrance Doors
• Series DH-350

IN-SWING DOORS AND FRAMES

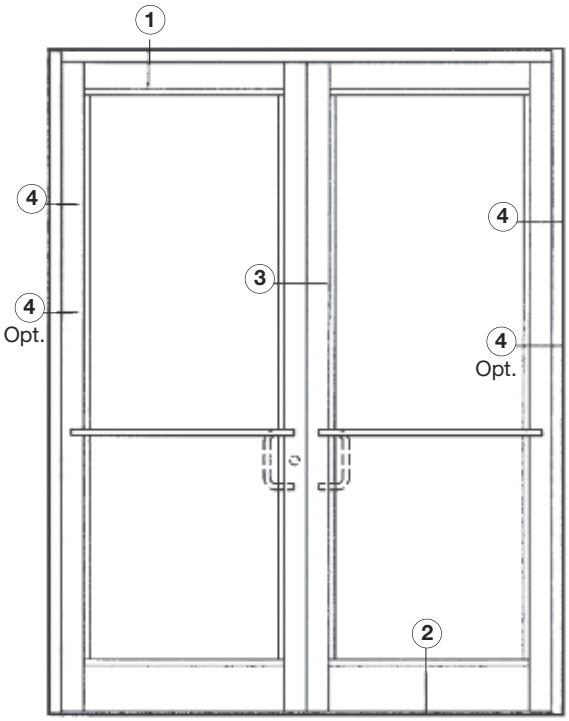

TYPICAL ELEVATION
IN-SWING PAIR OF DOORS

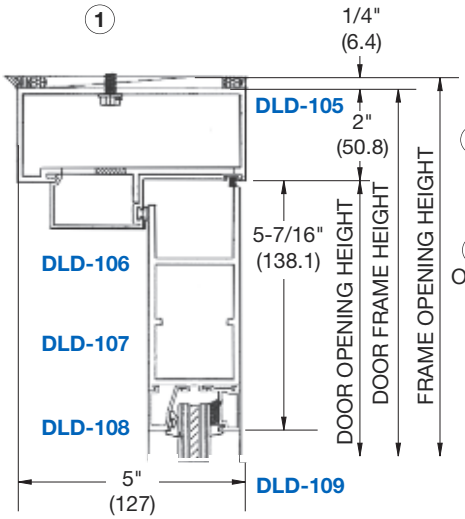

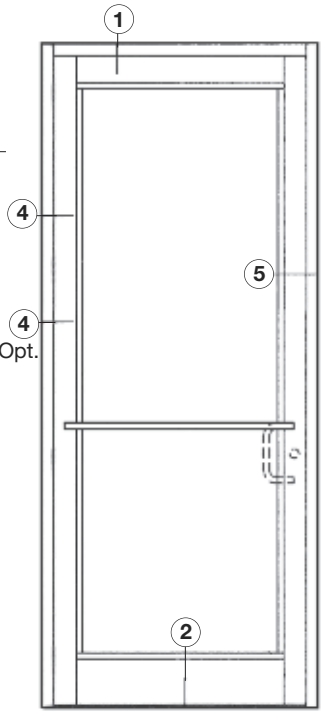

TYPICAL ELEVATION
IN-SWING SINGLE DOOR

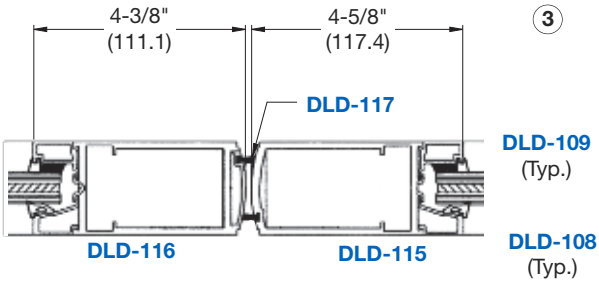

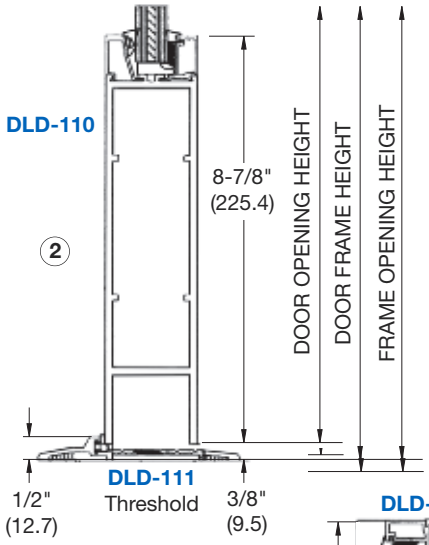

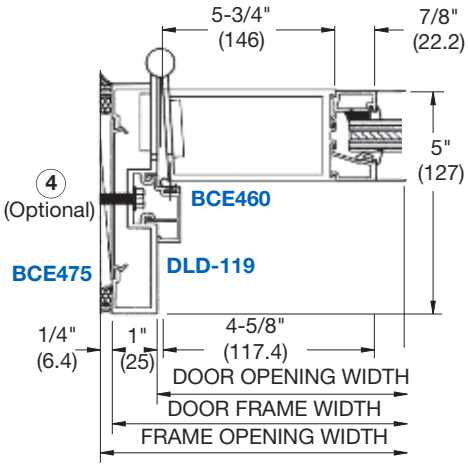

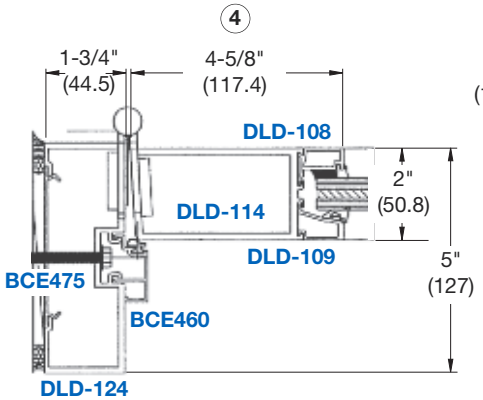

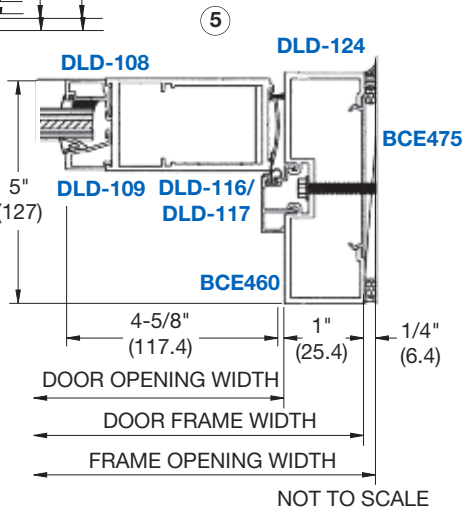

NOT TO SCALE

STORM FRONT™

CRL U.S. ALUMINUM

Hurricane (Impact) Resistant Entrance Doors • Series DH-350 Frames

OUT-SWING DOOR FRAMES

UP/OVER FRAMES FOR SINGLE AND PAIRS	HARDWARE	PART NO.*
Frame without Transom 39-1/2" x 86" or 39-1/2" x 98"	3 Butt Hinges 3-Point Lock 36" x 84" D.O.	DH350A10FN
	3 Butt Hinges Jackson Exit Device 36" x 84" D.O.	DH350A20FN
	4 Butt Hinges 3-Point Lock 36" x 96" D.O.	DH350A11FN
	4 Butt Hinges Jackson Exit Device 36" x 96" D.O.	DH350A21FN
Frame without Transom 75-1/2" x 86" or 75-1/2" x 98"	3 Butt Hinges 3-Point Lock 72" x 84" D.O.	DH350A10FNP
	3 Butt Hinges Jackson Exit Device 72" x 84" D.O.	DH350A20FNP
	4 Butt Hinges 3-Point Lock 72" x 96" D.O.	DH350A11FNP
	4 Butt Hinges Jackson Exit Device 72" x 96" D.O.	DH350A21FNP

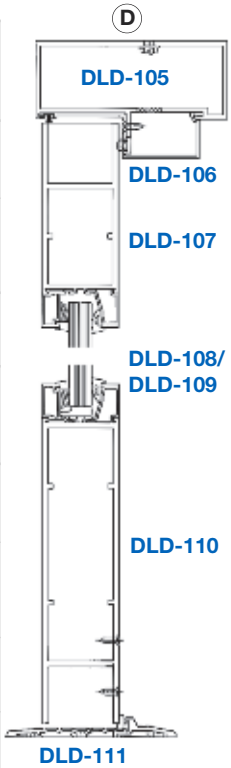

* For single door frames specify right or left handed at time of order.

TRANSOM FRAMES FOR SINGLE AND PAIRS	HARDWARE	PART NO.*
Frame with Transom 39-1/2" x 120"	3 Butt Hinges 3-Point Lock 36" x 84" D.O.	DH350A10FT
	3 Butt Hinges Jackson Exit Device. 36" x 84" D.O.	DH350A20FT
	4 Butt Hinges 3-Point Lock 36" x 96" D.O.	DH350A11FT
	4 Butt Hinges Jackson Exit Device 36" x 96" D.O.	DH350A21FT
Frame with Transom 75-1/2" x 120"	3 Butt Hinges 3-Point Lock 72" x 84" D.O.	DH350A10FTP
	3 Butt Hinges Jackson Exit Device 72" x 84" D.O.	DH350A20FTP
	4 Butt Hinges 3-Point Lock 72" x 96" D.O.	DH350A11FTP
	4 Butt Hinges Jackson Exit Device 72" x 96" D.O.	DH350A21FTP

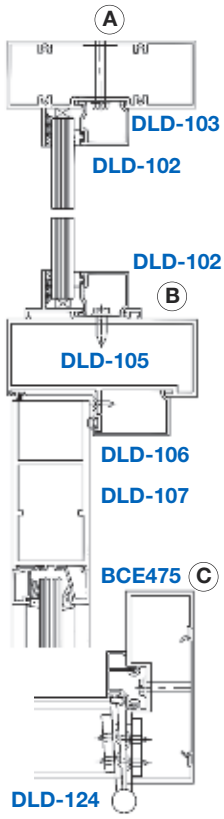

* For single door frames specify right or left handed at time of order.

IN-SWING DOOR FRAMES

UP/OVER FRAMES FOR SINGLE AND PAIRS	HARDWARE	PART NO.*
Frame without Transom 39-1/2" x 86" or 39-1/2" x 98"	3 Butt Hinges 3-Point Lock 36" x 84" D.O.	DH3501NA10FN
	4 Butt Hinges 3-Point Lock 36" x 96" D.O.	DH3501NA11FN
Frame without Transom 75-1/2" x 86" or 75-1/2" x 98"	3 Butt Hinges 3-Point Lock 72" x 84" D.O.	DH3501NA10FNP
	4 Butt Hinges 3-Point Lock 72" x 96" D.O.	DH3501NA11FNP

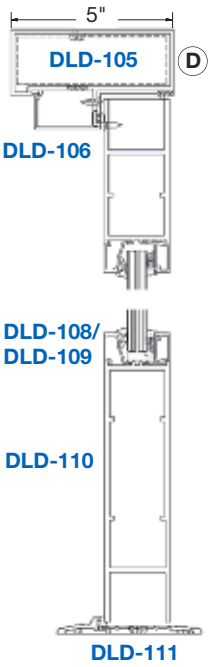

* For single door frames specify right or left handed at time of order.

TRANSOM FRAMES FOR SINGLE AND PAIRS	HARDWARE	PART NO.*
Frame with Transom 39-1/2" x 120"	3 Butt Hinges 3-Point Lock 36" x 84" D.O.	DH3501NA10FT
	4 Butt Hinges 3-Point Lock 36" x 96" D.O.	DH3501NA11FT
Frame with Transom 75-1/2" x 120"	3 Butt Hinges 3-Point Lock 36" x 84" D.O.	DH3501NA10FTP
	4 Butt Hinges 3-Point Lock 36" x 96" D.O.	DH3501NA11FTP

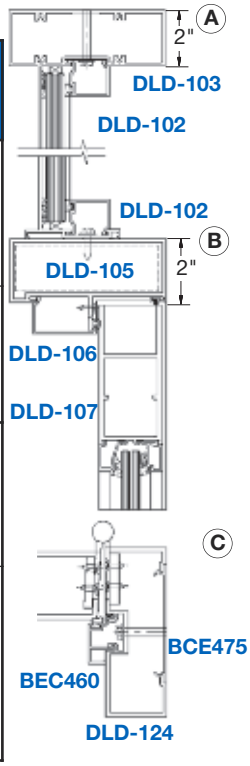

* For single door frames specify right or left handed at time of order.

CRL U.S. ALUMINUM

STORM FRONT™

Accessories

Hurricane (Impact) Resistant Entrance Doors
• Series DH-350

PART NO.	DETAIL	DESCRIPTION	PKG. QTY.
V220414	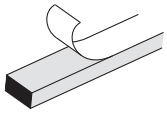	Norton 1/8" x 1/4" (3.2 x 6.4) ThermalBond Glazing Tape	50' (15.2 m) Roll
ACE1013		E.P.D.M. Glazing Gasket	300' (91.4 m) Roll
12N125SFPS		Assembly Screws #12 X 1-1/4" (31.8) Pan Head Phillips	100
SB574	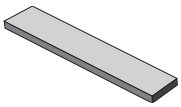	Neoprene Setting Block 1/8" x 3/4" x 4" (3.2 x 19 x 102) Long	100
12NWFS2Z		Bolts 1/4-20 x 2" (51) MS With Washer and Nut	100
BCE475	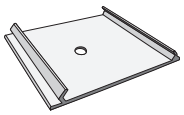	Flat Fillers 2-1/2" (63.5) Long. Used at Anchor Locations	50

Project: Corporate Offices, Miami, FL

STORM FRONT™

Table of Contents

Hurricane (Impact) Resistant Balcony/Terrace Doors
• Series BAL-350

SECTION M3 PAGE

SPECIFICATIONS 02-M3
TECHNICAL DATA.....03-M3
TYPICAL DETAILS .....04-M3 and 05-M3

M

Project: Private Condominiums, Miami, FL

Due to the diversity in state/provincial, local, and federal laws and codes that govern the design and application of architectural products, it is the responsibility of the individual architect, owner, and installer to ensure that products selected for use on projects comply with all applicable building codes and laws. U.S. Aluminum exercises no control over the use or application of its products, glazing materials, and operating hardware, and assumes no responsibility thereof.

The rapidly changing technology within the architectural aluminum products industry demands that U.S. Aluminum reserve the right to revise, discontinue or change any product line, specification or electronic media without prior written notice.

NOTE: Dimensions in parentheses ( ) are millimeters unless otherwise noted.
Other metric units shown in this publication are:

m - meter	Kg - kilogram
Pa - pascal	KPa - kilopascal
MPa - megapascal	

CRL U.S. ALUMINUM

STORM FRONT™

Specifications

SECTION 08 39 80
HURRICANE RESISTANT DOORS

Hurricane (Impact) Resistant Balcony/Terrace Doors
• Series BAL-350

NOA: 10-1102.01 Out-Swing

SERIES	FACE WIDTH	DEPTH	GLAZING INFILL	GLAZING METHOD
BAL-350	3-3/4" (95.3)	2" (50.8)	9/16" (14)	Factory Pre-Glazed

I. GENERAL DESCRIPTION
Work Included: The glazing contractor shall furnish all necessary materials, labor, and equipment for the complete installation of aluminum terrace doors and framing as detailed on the drawings and specified herein.
Work Not Included: A Structural support of the framing system, wood framing, structural steel, masonry, interior trim, and final cleaning.

QUALITY ASSURANCE
For purposes of designating type and quality for work in this section, drawings and specifications are based on U.S. Aluminum, Series BAL-350 Balcony/Terrace Door, 3-3/4" (95.3) vertical face dimension and 2" (50.8) depth. A 1" x 5" (25.4 x 127) or 1-3/4" x 5" (44.5 x 127) frame is available for moderate traffic applications. When substitute products are to be considered, supporting technical literature, samples, and drawings must be submitted 10 days prior to bid date in order to make a valid comparison of the products involved.

PERFORMANCE REQUIREMENTS
Meets all Miami-Dade County, Florida air, water, structural, and impact requirements.

Air Infiltration: When closed and locked, the test specimen shall be tested in accordance with ASTM E 283 and shall not exceed 0.27 cfm/sq. ft. at a test pressure differential of 6.24 PSF.
Water Resistance: When closed and locked, the test specimen shall be tested in accordance with ASTM E 331 and ASTM E 547 there shall be no uncontrolled leakage as defined in the test method at a static air pressure differential of 18 PSF. (single doors)
Large and Small Missile Impact Test: Maximum design pressure of +100 psf +0/-100 psf (large missile impact) and +120 psf/-120 psf (small missile impact).
Forced Entry Resistance - 300 pound concentrated load.

II. PRODUCTS/MATERIALS
Door members shall be extruded architectural aluminum 6063-T6 alloy and temper. Major portions of all door sections, shall be nominal .125" (3.2). Wall thickness of frame members shall be nominal .125" (3.2). Screws, nuts, washers, bolts, rivets, and other fastening devices shall be aluminum, stainless steel or other non-corrosive materials.

DOOR AND FRAME CONSTRUCTION
Door corners are to be accurately joined using "Secure Bolt" construction. The weather seals shall be open cell urethane foam core bonded to a U.V. stabilized polyurethane liner. Doors shall have non-removable interior glass stops with custom E.P.D.M. spacer by Tremco, DOW 995 Structural Silicone, and E.P.D.M. Wedge by Tremco.
No exposed screws shall be permitted except for anchoring.

HARDWARE
Four-point locking hardware shall be as recommended by manufacturer.
Finishes available are: Polished Brass, Brushed Brass, Matte Aluminum, Polished Chrome, Brushed Aluminum, White, and Black. Door leaves shall have a pair and a half (minimum) of heavy-duty mortised 4" x 4-1/2" (101.6 x 114.3) long butt hinges with non-removable stainless steel pins.
If hardware is to be furnished by others, templates and physical hardware must be submitted prior to any fabrication being started.

FINISH
All exposed framing surfaces shall be free of scratches and other serious blemishes. Standard aluminum extrusions shall be given a Kynar 500 AAMA 2605 paint.

(Specify one of the following):
_____Bone White
_____Statuary Bronze
_____Kynar 500 (Special Order) with the requirements of AAMA 2605. Color shall be *(specify).*
Class 1 anodized extrusions shall be given a caustic etch followed by a anodic oxide treatment to obtain...
_____Clear Anodize
_____Bronze Anodize

III. EXECUTION INSTALLATION
All items under this heading shall be set by a qualified installer in their correct locations as shown in the details and shall be level, square, plumb, and at proper elevation and in alignment with other work in accordance with the manufacturer's installation instructions and approved shop drawings. All joints between entrance framing and the building structure shall be sealed in order to secure a watertight installation. Upon completion of the installation of the entrances, it shall be the contractor's responsibility to make all necessary final adjustments to attain normal operation of each door and its mechanical hardware.

PROTECTION AND CLEANING
After installation the General Contractor shall adequately protect exposed portions of the aluminum entrance work from damage by grinding and polishing compounds, plaster, lime, acid, cement or other contaminants. The General Contractor shall be responsible for final cleaning.

IV. OPTIONS
- Concealed Overhead Closers
- Exposed Heavy-Duty Closers
- Standard 1" (25.4) Round Push/Pull Sets
- Three Point Locking System With Exterior Cylinder and Interior Thumbturn

STORM FRONT™

Technical Data

Hurricane (Impact) Resistant Balcony/Terrace Doors
• Series BAL-350

The BAL-350 Hurricane (Impact) Resistant Balcony/Terrace Door is elegantly designed for high rise applications such as hotels, condominiums, and office buildings. Being tested for both small and large missile impact resistance, as well as its high performance for water resistance, makes the BAL-350 meet and exceed all commercial and high-rise condominium developer requirements with the highest level of quality. With the growing need for a commercial impact resistant product in the residential market, the BAL-350 by U.S. Aluminum has topped the list for single terrace and balcony doors.

Series BAL-350 Impact Resistant Out-Swing Balcony/Terrace Door (Exterior View)

Designer Latch Lock

Standard Features:
- Factory Pre-Glazed With Structural Silicone
- Maximum Panel Size: 42" x 108" (1067 x 2743)
- Heavy Commercial Grade
- Maximum Frame Height 120" (3048), Including Transom
- 4-7/16" (112.7) Top Rail and 8" (203.2) Bottom Rail
- 3" (76.2) High Water Threshold
- Heavy-Duty Internal Corner Clips
- 1" x 5" (25 x 127) or 1-3/4" x 5" (44.5 x 127) Door Frame
- 0.125 (3.2) Nominal Wall Thickness, Door and Frame
- 1-1/2 Pair of 4" x 4-1/2" (101.6 x 114.3) Mortised Aluminum Butt Hinges With Non-Removable Stainless Steel Hinge Pins for Door Opening Heights Up to 84" (2137)
- Two Pairs of 4" x 4-1/2" (101.6 x 114.3) Mortised Aluminum Butt Hinges With Non-Removable Stainless Steel Hinge Pins for Door Opening Heights Greater Than 84" (2137)
- Double Rows of Weather Seals
- Stainless Steel Four-Point Locking System Including Latch Lock, Deadbolt Lock With Shoot-Bolts Top and Bottom
- Solid Brass Lever Handle by Ashland
- Non-Removable Interior Glass Stops
- Wet Glazing Method

Options:
- Custom Finishes: AAMA 2605 Compliant Painted Finishes
- Concealed Overhead Closers
- Surface Mounted Heavy-Duty Closers
- Large Missile 9/16" (14) VS Laminated Impact Glass
  - Laminated Glass Composition:
  - 1/4" (6) Heat Strengthened Laminated Glass
  - 0.075" VS02 Interlayer
  - 1/4" (6) Heat Strengthened Glass
- Small Missile 9/16" (14) PVB Laminated Impact Glass
  - Laminated Glass Composition:
  - 1/4" (6) Heat Strengthened Glass
  - 0.90" PVB Interlayer
  - 1/4" (6) Heat Strengthened Glass
- Glass Tint Available as Selected by the Architect/Owner
- Designer Latch Lock Hardware Finishes Available: Black, Brushed Aluminum, Brushed Brass, Matte Aluminum, Polished Brass, Polished Chrome, and White.
- Open for Glazing by Customer

CRL U.S. ALUMINUM

STORM FRONT™

Typical Details

Hurricane (Impact) Resistant Balcony/Terrace Doors • Series BAL-350

OUT-SWING DOORS AND FRAMES

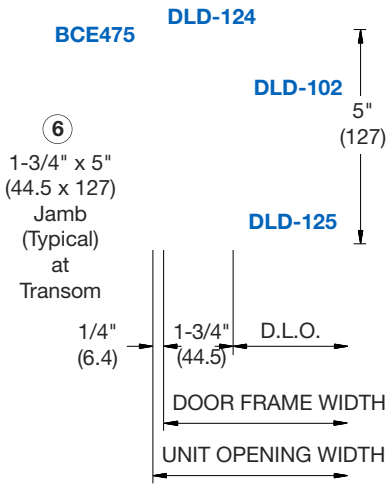

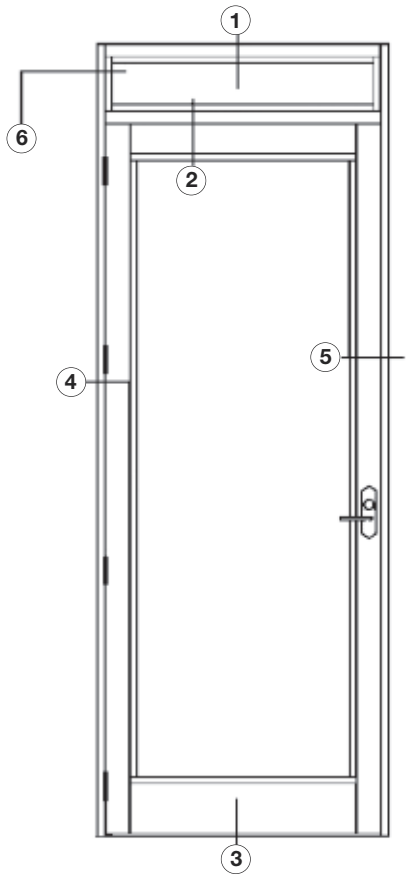

TYPICAL ELEVATION
OUT-SWING DOOR

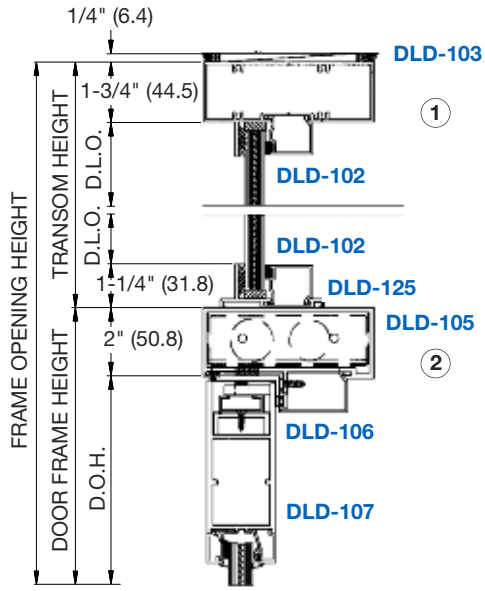

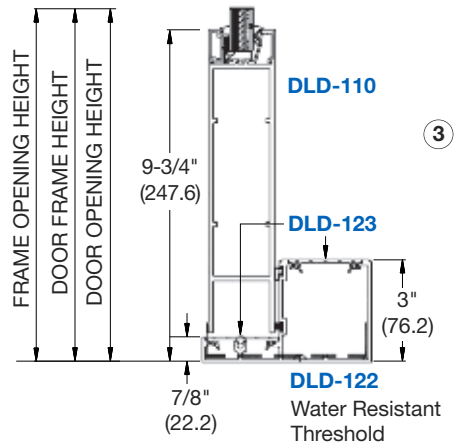

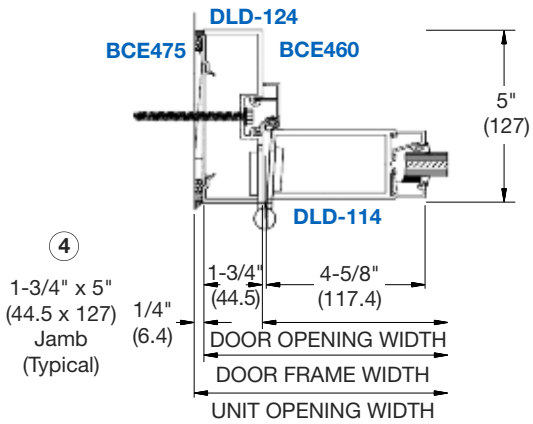

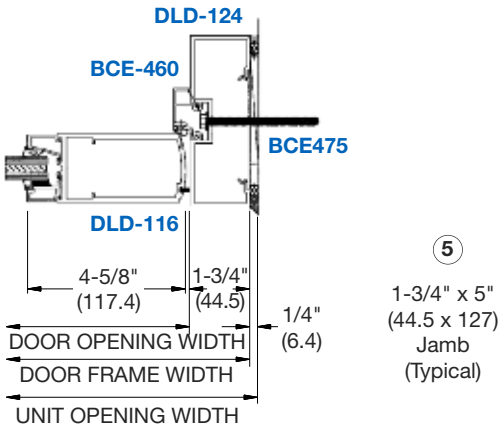

NOT TO SCALE

M

STORM FRONT™

OUT-SWING DOOR FRAMES

Hurricane (Impact) Resistant Balcony/Terrace Doors
• Series BAL-350

UP/OVER FRAME FOR SINGLE DOOR	HARDWARE	PART NO.*
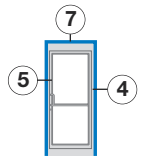 Frame without Transom 39-1/2" x 86" or 39-1/2" x 98"	3 Butt Hinges 36" x 84" D.O.	BAL350W10FN
	4 Butt Hinges 36" x 96" D.O.	BAL350W11FN

* Specify Right or Left Hand when ordering.

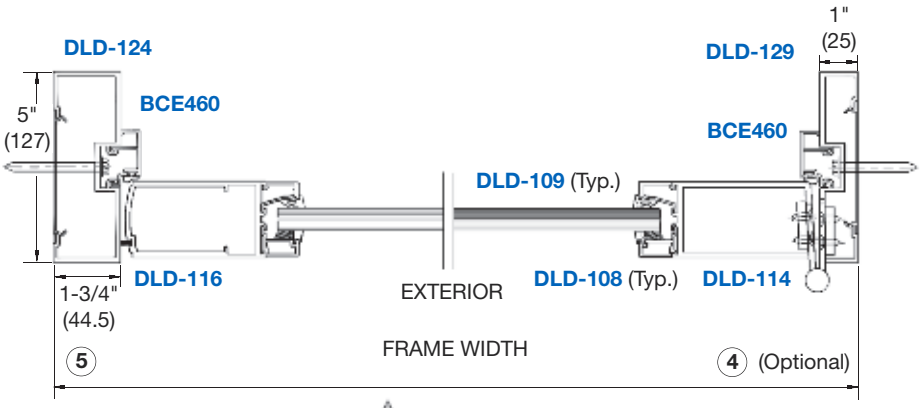

TRANSOM FRAME	HARDWARE	PART NO.*
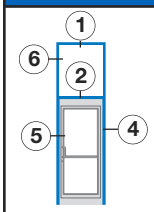 Frame with Transom 39-1/2" x 120"	3 Butt Hinges 36" x 84" D.O.	BAL350W10FT
	4 Butt Hinges 36" x 96" D.O.	BAL350W11FT

* Specify Right or Left Hand when ordering. Maximum door frame size 39-1/2" x 10' (1003 x 3048) with Transom; 39-1/2" x 9' 2" (1003 x 2794) without Transom

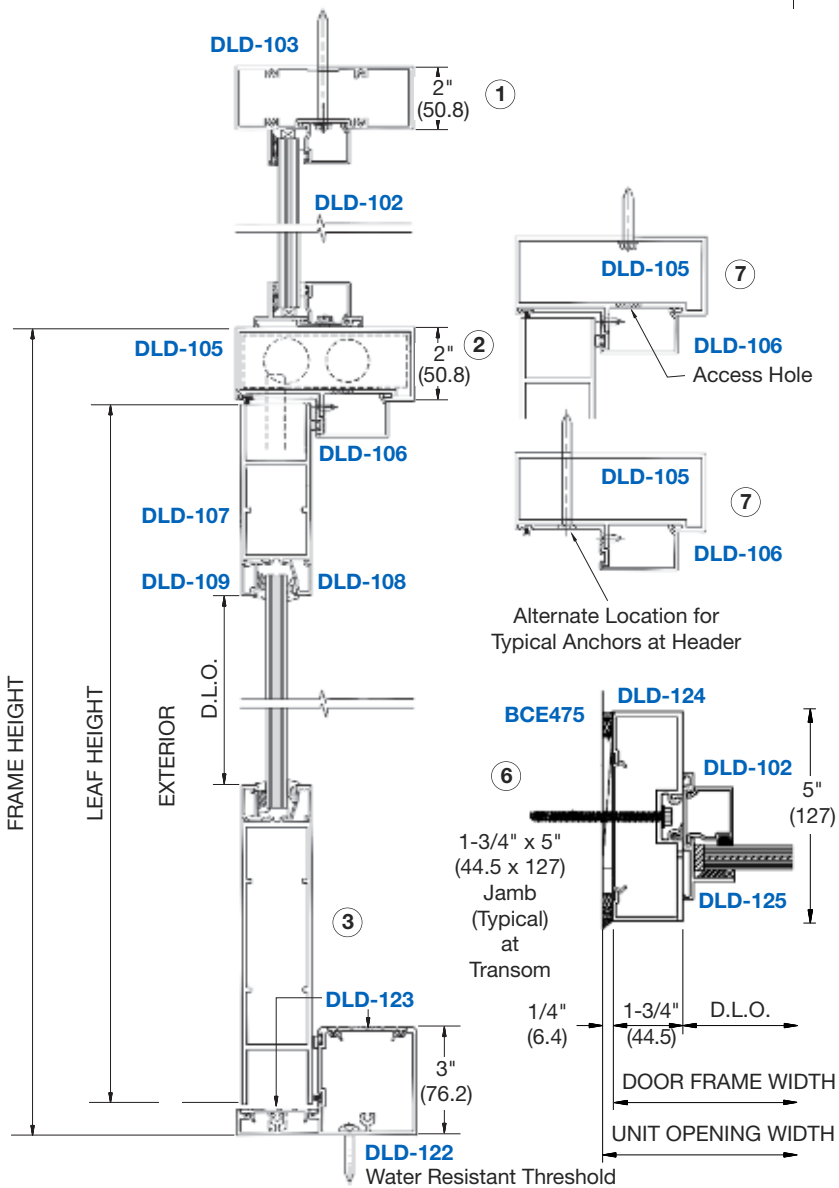

BAL-350 Balcony Door Frame Standard Features:
- Factory Assembled
- 1-3/4" x 5" (44.5 x 127) Door Jamb
- Stainless Steel Butt Hinges With Aluminum Back-Up Plates
- 3" (76.2) Water Resistant Threshold
- Pre-Drilled for Anchors
- Stainless Steel Water Resistant Keeper
- Silicone Sealed Corner Joinery

BAL-350 Balcony Door Frame Options:
- 1" (25) Door Jambs

STORM FRONT™ WINDOWS

Table of Contents

Hurricane (Impact) Resistant Windows

- Series IW7500
- Series IW7600
- Series IW8000
- Series IW8100
- Series IW8200

SECTION M4 PAGE

SPECIFICATIONS SERIES IW7500 AND IW7600 WINDOWS .....02-M4 and 03-M4
SPECIAL FEATURES SERIES IW7500 WINDOW 04-M4
TYPICAL DETAILS SERIES IW7500 WINDOW 05-M4
SPECIAL FEATURES SERIES IW7600 WINDOW 06-M4
TYPICAL DETAILS SERIES IW7600 WINDOW 07-M4
SPECIFICATIONS SERIES IW8000, IW8100, AND IW8200 WINDOWS .....08-M4 and 09-M4
SPECIAL FEATURES SERIES IW8000 WINDOW 10-M4
TYPICAL DETAILS SERIES IW8000 WINDOW 11-M4
SPECIAL FEATURES SERIES IW8200 WINDOW 12-M4
TYPICAL DETAILS SERIES IW8200 WINDOW 13-M4
SPECIAL FEATURES AND TYPICAL DETAILS SERIES IW8100 WINDOW 14-M4

Due to the diversity in state/provincial, local, and federal laws and codes that govern the design and application of architectural products, it is the responsibility of the individual architect, owner, and installer to ensure that products selected for use on projects comply with all applicable building codes and laws. U.S. Aluminum exercises no control over the use or application of its products, glazing materials, and operating hardware, and assumes no responsibility thereof.

The rapidly changing technology within the architectural aluminum products industry demands that U.S. Aluminum reserve the right to revise, discontinue or change any product line, specification or electronic media without prior written notice.

NOTE: Dimensions in parentheses ( ) are millimeters unless otherwise noted.
Other metric units shown in this publication are:

m - meter	Kg - kilogram
Pa - pascal	KPa - kilopascal
MPa - megapascal	

STORM FRONT™ WINDOWS

Specifications

SECTION 08 56 40
HURRICANE (IMPACT) RESISTANT WINDOWS

Hurricane (Impact) Resistant Concealed Vent Windows

- Series IW7500
- Series IW7600

PART 1 GENERAL

1.01 Work Included

A. Furnish and install aluminum architectural windows complete with hardware and related components as shown on drawings and specified in this section.

B. All windows shall be U.S. Aluminum Series IW7500 C75 or Series IW7600 CW100 Rated Hurricane Resistant Concealed Vent Thermal Windows *(Specify)*. Other manufacturers requesting approval to bid their product as an equal must submit the following information 10 days prior to close of bidding.

1. A sample window, 36" x 24" (914 x 610) single unit, as per requirements of architect.
2. Test reports documenting compliance with requirements of Section 1.05 or 11.15 of CSA A440.

(Specify glass and glazing in this section if window assemblies are to be glazed by the window manufacturer. If glazing is to be done by a different contractor, glass and glazing should be specified in Section 08 80 00).

C. Glass and Glazing

1. Reference Section 08 80 00 for Glass and Glazing.

1.02 Related Work

Section 08 40 00 - Entrances and Storefronts
Section 08 44 00 - Glazed Curtain Walls
Section 08 50 00 - Windows
Section 08 88 19 - Hurricane Resistant Glazing

1.03 Testing and Performance Requirements

A. Test Units

1. Air, water, and structural test unit shall conform to requirements set forth in ANSI/AAMA/NWWDA 101 I.S. 2-97 and AAMA 910-93 or CSA A440.
2. Thermal test unit sizes shall be 36" x 60" (914 x 1524). Unit shall consist of a casement, fixed or projected window.

B. Test Procedures and Performances

1. Windows shall conform to all AAMA/ANSI/NWWDA-101 I.S. 2-97 and AAMA 910-93 or CSA A440 requirements for the window type referenced in 1.01.B. In addition, the following specific performance requirements shall be met.
2. **Air Infiltration Test:**
   a. With ventilators closed and locked, test unit in accordance with ASTM E 283-91 at a static air pressure difference of 6.24 psf.
   b. Air infiltration shall not exceed .30 cfm per foot of crack.
3. **Water Resistance Test:**
   a. With ventilators closed and locked, test unit in accordance with ASTM E 331-96/ASTM E 547 at a static air pressure difference of 12 psf.
   b. There shall be no uncontrolled water leakage.
4. **Uniform Load Deflection Test:**
   a. With ventilators closed and locked, test unit in accordance with ASTM E 330-97 at a static air pressure difference of 112.5 psf positive and negative pressure.
   b. No member shall deflect over L/175 of its span.
5. **Condensation Resistance Test (CRF)**:
   a. With ventilators closed and locked, test unit in accordance with AAMA 1503.
   b. Condensation Resistance Factor (CRF) shall not be less than 49.
6. **Thermal Transmittance Test (Conductive U-Value)**:
   a. With ventilators closed and locked, test unit in accordance with NFRC 100, 200, and AAMA 1503.
   b. Conductive thermal transmittance (U-Value) shall not be more than 0.63 BTU/hr/ft^2/°F.
7. **AAMA Testing Procedures:** Testing Procedures- AAMA/WDMA/CSA 101/I.S.2/A440-0.8 - Laboratory Performance Testing. AAMA 502-08 - Newly Installed Fenestration Products. AAMA 511-08 - Installed Fenestration Products After 6 Months.
8. Hurricane Resistant Testing as per Miami/Dade County Protocols TAS 201, 202, and 203.

1.04 Quality Assurance

A. Provide test reports from AAMA accredited laboratories certifying the performance as specified in 1.05 or 11.15 of CSA A440.

B. Test reports shall be accompanied by the window manufacturer's letter of certification, stating the tested window meets or exceeds the referenced criteria for the appropriate AAMA/NWWDA 101/I.S.2-97 and AAMA 910-93 or CSA A440 window type.

1.05 Submittals

A. Contractor shall submit shop drawings, finish samples, test reports, and warranties.

1.06 Warranties

A. Total Window System

1. The responsible contractor shall assume full responsibility and warrant for one year the satisfactory performance of the total window installation which includes that of the windows, hardware, glass (including insulated units), glazing, anchorage and setting system, sealing, flashing, etc., as it relates to air, water, and structural adequacy as called for in the specifications and approved shop drawings.

STORM FRONT™ WINDOWS

Specifications

SECTION 08 56 40
HURRICANE (IMPACT) RESISTANT WINDOWS

Hurricane (Impact) Resistant Concealed Vent Windows

- Series IW7500
- Series IW7600

PART 2 PRODUCTS

2.01 Materials

A. Aluminum
1. Extruded aluminum shall be 6063-T5 alloy and tempered.

B. Hardware
1. Locking handles shall be supplied by U.S. Aluminum.
2. Operating hardware shall be 4-Bar Stainless Steel Arms or equal.

C. Weatherstrip
1. All weatherstrip shall be E.P.D.M. or equal.

D. Thermal Barrier
1. Barrier material shall be poured-in-place two part polyurethane. To ensure that composite strength remains unaltered during thermal cycling, a mechanical bond between the aluminum and the thermal filling shall be created by mechanically abrading the extrusion thermal cavity prior to filling with the polyurethane polymer. A non-structural thermal barrier is unacceptable.
2. Specified hardware shall not bridge the thermal barrier.

E. Accepts Laminated 1" (25) Glazing

2.02 Fabrication

A. General
1. All primary aluminum frame and vent extrusions shall have a minimum wall thickness of .125" (3.2)
2. Mechanical fasteners, welded components, and hardware items shall not bridge thermal barriers. Thermal barriers shall align at all frame and vent corners.
3. Depth of frame and vent shall not be less than 3" (76.2) for 1" (25) glazing.

B. Frame
1. Frame components shall be mechanically fastened.

C. Ventilator
1. All vent extrusions shall be tubular.
2. Each corner shall be mitered, reinforced with an extruded corner key, and hydraulically crimped.
3. Each vent shall be pressure equalized utilizing two rows of E.P.D.M. weatherstripping (or equal) installed in dovetail grooves in the extrusion.
4. The vent shall present a flush appearance with the main frame when in the closed position.

D. Screens
1. Screen frames shall be extruded.
2. Screen mounting holes in the window frame shall be factory drilled.
3. Screen mesh shall be aluminum or fiberglass (if applicable).

E. Glazing
1. All units shall be glazed with spacer and structural silicone.

F. Finish
All exposed framing surfaces shall be free of scratches and other serious blemishes. Aluminum extrusions shall be given a caustic etch followed by an anodic oxide treatment to obtain…
(Specify one of the following):
_____#11 Clear anodic coating
_____#22 Dark Bronze anodic coating
_____#33 Black anodic coating
A Fluoropolymer paint coating conforming with the requirements of AAMA 2605. Color shall be *(Specify a U.S. Aluminum standard color)*.

PART 3 EXECUTION

3.01 Inspection

A. Job Conditions
1. Verify that openings are dimensionally within allowable tolerances, plumb, level, clean, provide a solid anchoring surface, and are in accordance with approved shop drawings.

3.02 Installation

A. Use only skilled tradesmen with work done in accordance with approved shop drawings and specifications.

B. Plumb and align window faces in a single plane for each wall plane, and erect windows and materials square and true. Adequately anchor to maintain positions permanently when subjected to normal thermal movement, specified building movement, and specified wind loads.

C. Adjust windows for proper operation after installation.

D. Furnish and apply sealants to provide a weather tight installation at all joints and intersections, and at opening perimeters.

3.03 Protection and Cleaning

A. After completion of window installation, windows shall be inspected, adjusted, put into working order and left clean, free of labels, dirt, etc. Protection from this point shall be the responsibility of the general contractor.

STORM FRONT™ WINDOWS

Special Features

FOR 1" (25) GLAZING

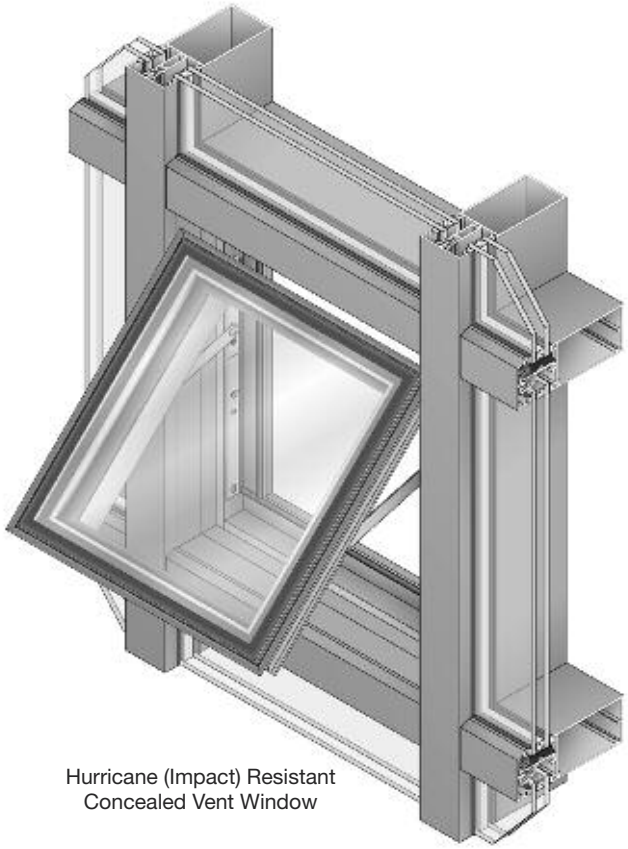

Hurricane (Impact) Resistant
Concealed Vent Window

When closed, the vent is sealed to the frame with E.P.D.M. bulb gaskets ensuring an air tight seal. The 1" (25) laminated glazing is held in place with structural silicone.

Hurricane (Impact) Resistant Concealed Vent Window

• Series IW7500

The Series IW7500 Hurricane (Impact) Resistant Concealed Vent is a minimal sightline out-swing thermally broken window perfect for use in storefront, window wall, and curtain wall openings in coastal areas requiring Hurricane (Impact) Resistant Systems. Stainless steel 4-bar hinges and cam locking handles complete the heavy-duty hardware used on the Hurricane (Impact) Resistant Window. As with all of our operable windows, vent construction is accomplished with tubular vent components, mitered, reinforced with corner keys, and crimped.

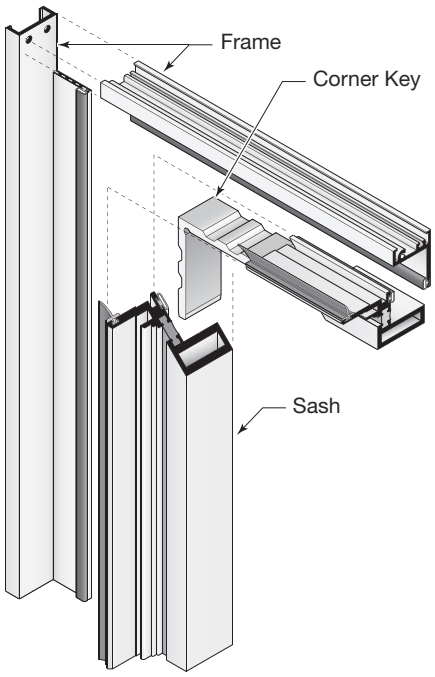

M

HARDWARE SELECTION GUIDE				
SERIES IW7500 HURRICANE (IMPACT) RESISTANT CONCEALED VENT WINDOW				
		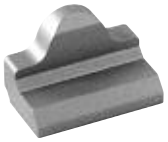		
WH601 Locking Handle	**WH602** Keeper	**WH603** Handle Base	**WH765** Snubber Driver	**WH766** Snubber Receiver

STORM FRONT™ WINDOWS

Typical Details

FOR 1" (25) GLAZING

Series IW7500 Concealed Vent Window
With Storm Wall® IW3250 Curtain Wall System

Hurricane (Impact) Resistant Concealed Vent Window
• Series IW7500

For specifications, details, and testing data go to **usalum.com**

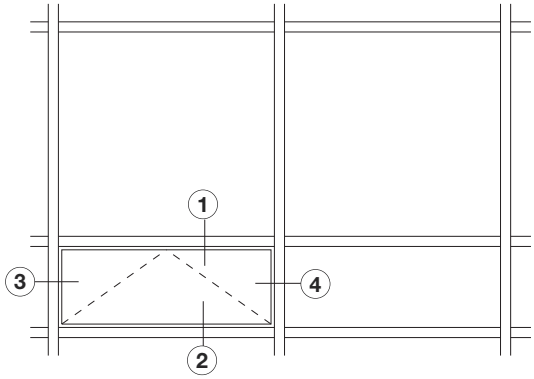

TYPICAL ELEVATION

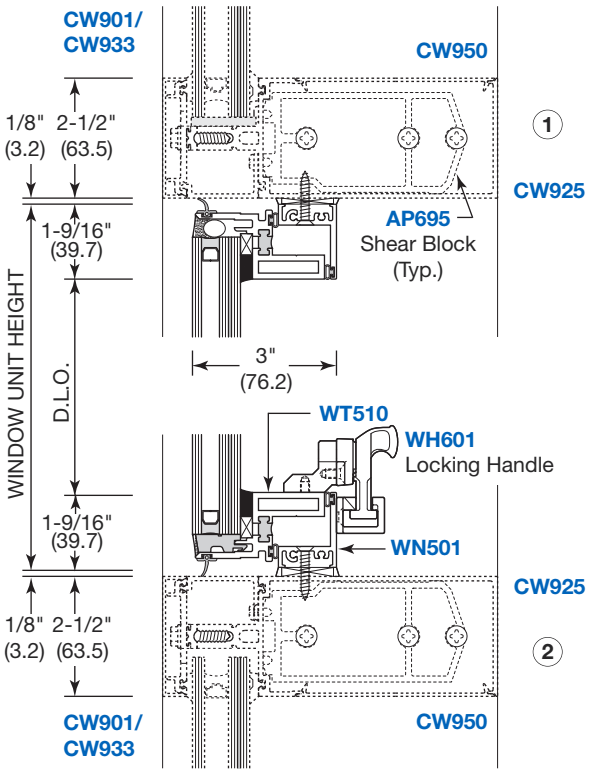

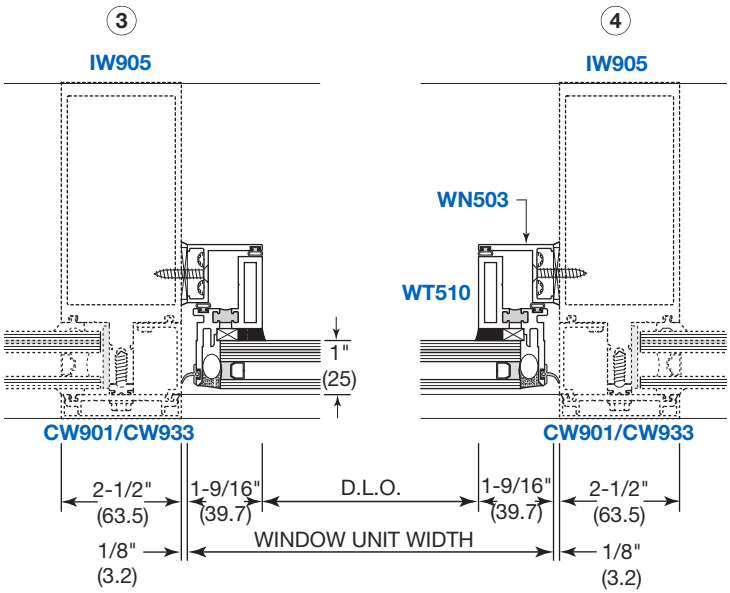

NOT TO SCALE

STORM FRONT™ WINDOWS

Special Features

FOR 1" (25) GLAZING

Hurricane (Impact) Resistant Concealed Vent Window

• Series IW7600

Storm Front™

The Series IW7600 Concealed Vent is a minimal sightline window perfect for use in storefront, ribbon window, and curtain wall openings. Standard hardware includes a single Multi-Point Locking Handle. As with all of our operable windows, vent construction starts with tubular vent components that are mitered, reinforced with corner keys, and crimped at all corners. When closed, the vent is sealed to the frame with bulb gaskets ensuring an air tight seal. The high performance IW7600 Window meets the stringent requirements of the Miami/Dade County protocol for maximum protection from high winds and wind-borne debris.

- AAMA CW100-Rated
- Accepts 1" (25) Glazing
- Minimal Sightline
- Structural Silicone Glazed
- Euro Multi-Point Locking Handles
- Use With Storefront or Curtain Wall
- Thermally Broken
- U-Factor 0.56 to 0.34
- Reinforced Corner Construction
- Made in the U.S.A.

Hurricane Resistant
Concealed Vent Window

STORM FRONT™ WINDOWS

Typical Details

FOR 1" (25) GLAZING

Series IW7600 Concealed Vent Window With Storm Wall™ IW3250 Curtain Wall System

For specifications, details, and testing data go to **usalum.com**

Hurricane (Impact) Resistant Concealed Vent Window

• Series IW7600

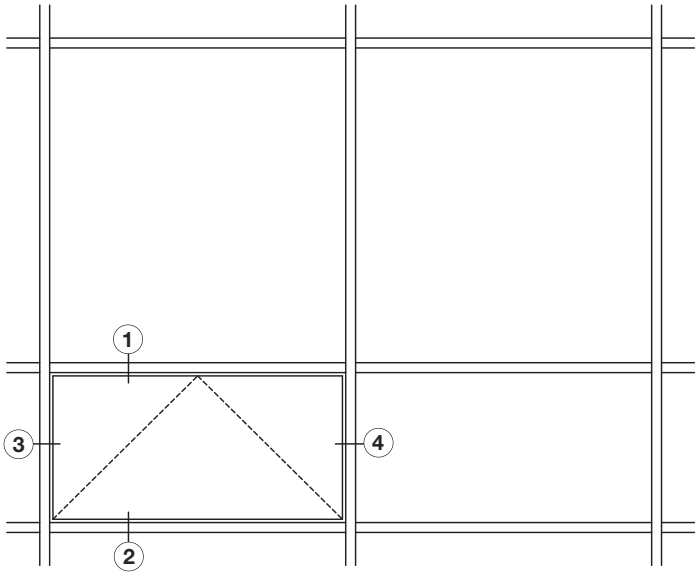

TYPICAL ELEVATION

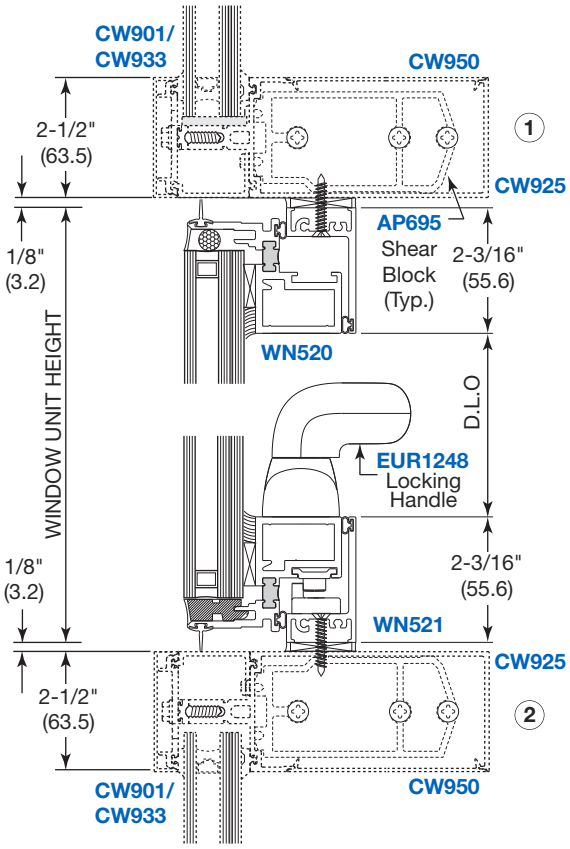

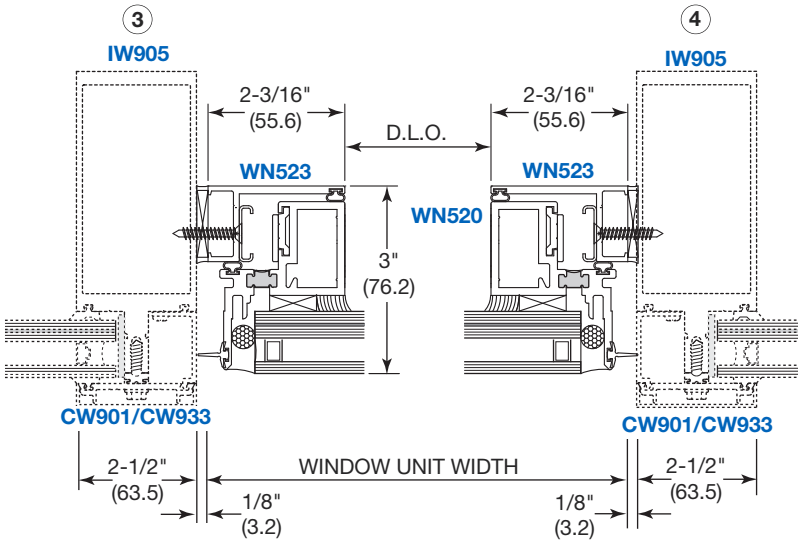

EURO MULTI-POINT LOCKING HANDLES

PART NO.	FINISH
EUR1248W	Powder Coat White
EUR1248BL	Powder Coat Black
EUR1248SN	Satin Nickel
EUR1248SC	Satin Chrome

NOT TO SCALE

STORM FRONT™ WINDOWS

Specifications

Hurricane (Impact) Resistant Single Hung, Sliding, and Fixed Windows

- Series IW8000
- Series IW8100
- Series IW8200

SECTION 08 56 40
HURRICANE (IMPACT) RESISTANT WINDOWS

QUALITY ASSURANCE

Drawings and specifications are based on Series IW8000 Single Hung, IW8100 Fixed, or IW8200 Horizontal Sliding *(Specify)* CW60 Hurricane Resistant Thermal Windows as manufactured by U.S. Aluminum. Whenever substitute products are to be considered, supporting technical literature, samples, drawings, and performance data must be submitted 10 days prior to bid in order to make a valid comparsion of the products involved. Test reports certified by an AAMA independent test laboratory must be made available upon request.

PART 1 GENERAL

1.01 Work Included

A. Furnish and install aluminum architectural windows complete with hardware and related components as shown on drawings and specified in this section.

(Specify glass and glazing in this section if window assemblies are to be glazed by the window manufacturer. If glazing is to be done by a different contractor, glass and glazing should be specified in Section 08 80 00).

B. 1-7/32" (31) Thick Glass and Glazing
   1. All units shall be factory glazed.

OR

   1. Reference Section 08 80 00 for Glass and Glazing.

List work and materials related to this section but specified in other sections.

1.02 Related Work

Section 08 40 00 - Entrances and Storefronts
Section 08 44 00 - Glazed Curtain Walls
Section 08 50 00 - Windows

1.03 Testing and Performance Requirements

A. Test Units
   1. Air, water, and structural test unit shall conform to requirements set forth in ANSI/AAMA/NWWDA 101 I.S. 2-97 and AAMA 910-93 or CSA A440.
   2. Thermal test unit sizes shall be 47-1/4" x 59" (1200 x 1500) for Series IW8000 and IW8100, 59" x 47-1/4" (1500 x 1200) for Series IW8200. Unit shall consist of a single hung, fixed or horizontal sliding window.

B. Test Procedures and Performances
   1. Windows shall conform to all AAMA/ANSI/NWWDA-101 I.S. 2-97 and AAMA 910-93 or CSA A440 requirements for the window type referenced in 1.01.B. In addition, the following specific performance requirements shall be met.
   2. **Air Infiltration Test:** With ventilators closed and locked, test unit in accordance with ASTM E 283-91 at a static air pressure difference of 6.24 psf. Air infiltration shall not exceed .30 cfm per foot of crack.
   3. **Water Resistance Test:** With ventilators closed and locked, test unit in accordance with ASTM E 331-96/ASTM E 547 at a static air pressure difference of 12 psf. There shall be no uncontrolled water leakage.
   4. **Uniform Load Deflection Test:** With ventilators closed and locked, test unit in accordance with ASTM E 330-97 at a static air pressure difference of 90 psf positive and negative pressure. No member shall deflect over L/175 of its span.
   5. **Condensation Resistance Test (CRF):** With ventilators closed and locked, test unit in accordance with AAMA 1503. Condensation Resistance Factor (CRF) shall not be less than 49 for Series IW8100 and IW8200. Not less than 50 for Series IW8000.
   6. **Thermal Transmittance Test (Conductive U-Value):** With ventilators closed and locked, test unit in accordance with NFRC 100 and AAMA 1503. Conductive thermal transmittance (U-Value) for Series IW8000 and IW8200 Windows shall have a range between 0.35 to 0.56 BTU/hr/ft^2/°F and Series IW8100 Windows shall have a range between 0.33 to 0.56 BTU/hr/ft^2/°F.
   7. **AAMA Testing Procedures:**
      - AAMA/WDMA/CSA 101/I.S.2/A440-0.8 - Laboratory Performance Testing.
      - AAMA 503-08 - Newly Installed Fenestration Products.
      - AAMA 511-08 - Installed Fenestration Products After 6 Months.
   8. Hurricane Resistant Testing as per Miami/Dade County Protocols TAS 201, 202, and 203.

1.04 Quality Assurance

A. Provide test reports from AAMA accredited laboratories certifying the performance as specified in 1.05 or 11.15 of CSA A440.

B. Test reports shall be accompanied by the window manufacturer's letter of certification, stating the tested window meets or exceeds the referenced criteria for the appropriate AAMA/NWWDA 101/I.S.2-97 and AAMA 910-93 or CSA A440 window type.

1.05 Submittals

A. Contractor shall submit shop drawings, finish samples, test reports, and warranties.

STORM FRONT™ WINDOWS

Specifications

Hurricane (Impact) Resistant Single Hung, Sliding, and Fixed Windows

- Series IW8000
- Series IW8100
- Series IW8200

SECTION 08 56 40
HURRICANE (IMPACT) RESISTANT WINDOWS

1.06 Warranties

A. Total Window System

1. The responsible contractor shall assume full responsibility and warrant for one year the satisfactory performance of the total window installation which includes that of the windows, hardware, glass (including insulating units), glazing, anchorage and setting system, sealing, flashing, etc., as it relates to air, water, and structural adequacy as called for in the specifications and approved shop drawings.

PART 2 PRODUCTS

2.01 Materials

A. Aluminum

1. Extruded aluminum shall be 6063-T5 alloy and tempered.

B. Hardware

1. Series IW8000 and IW8200 Windows have spring loaded self-locking latches as supplied by U.S. Aluminum.

C. Weatherstrip

1. For Series IW8000 and IW8200 Windows weatherstrip shall be fin seal or equal. For Series IW8100 Windows all weatherstrip shall be E.P.D.M.

D. Thermal Barrier

1. Barrier material shall be poured-in-place two part polyurethane. To ensure that composite strength remains unaltered during thermal cycling, a mechanical bond between the aluminum and the thermal filling shall be created by mechanically abrading the extrusion thermal cavity prior to filling with the polyurethane polymer. A non-structural thermal barrier is unacceptable.
2. Specified hardware shall not bridge the thermal barrier.

E. Glass

1. Insulating glass shall be 1-7/32" (31) as manufactured by ( ) consisting of ( ) exterior, ( ) air spacer, and ( ) interior.

2.02 Fabrication

A. General

1. All primary aluminum frame, extrusions or vent extrusions shall have a minimum wall thickness of .062 (1.57)
2. Depth of frame 4-1/2" (114.3) for 1-7/32" (31) glazing.

B. Frame - Frame components shall be mechanically fastened.

C. Ventilator (Series IW8000 and IW8200)

1. All vent extrusions shall be notched .

D. Screens (Series IW8000 and IW8200)

1. Screen frames shall have springs locking the screen in place.
2. Screen mesh shall be aluminum or fiberglass. (if applicable)

E. Glazing - All units shall be either shop or field glazed.

F. Finish

All exposed framing surfaces shall be free of scratches and other serious blemishes. Aluminum extrusions shall be given a caustic etch followed by an anodic oxide treatment to obtain...

(Specify one of the following)

_____#11 Clear anodic coating

_____#22 Dark Bronze anodic coating

_____#33 Black anodic coating

A Fluoropolymer paint coating conforming with the requirements of AAMA 2605. Color shall be *(Specify a U.S. Aluminum standard color)*.

PART 3 EXECUTION

3.01 Inspection

A. Job Conditions

1. Verify that openings are dimensionally within allowable tolerances, plumb, level, clean, provide a solid anchoring surface, and are in accordance with approved shop drawings.

3.02 Installation

A. Use only skilled tradesmen with work done in accordance with approved shop drawings and specifications.

B. Adequately anchor to maintain positions permanently when subjected to normal thermal movement, specified building movement, and specified wind loads.

C. Adjust windows for proper operation after installation.

D. Furnish and apply sealants to provide a weather tight installation at all joints and intersections and at opening perimeters.

3.03 Protection and Cleaning

A. After completion of window installation, windows shall be inspected, adjusted, put into working order and left clean, free of labels, dirt, etc. Protection from this point shall be the responsibility of the general contractor.

STORM FRONT™ WINDOWS

Special Features

FOR 1-7/32" (31) GLAZING

Hurricane (Impact) Resistant Single Hung Window

• Series IW8000

Storm Front™

As part of the 8000 Series of heavy commercial windows, the IW8000 Hurricane Resistant Single Hung Window offers a 4-1/2" (114) deep frame designed to match typical building conditions, including our entrances and storefronts. An efficient, thermally insulated frame accepts 1-7/32" (31) glazing, with extruded pulls at the interlock and bottom rail. The window features a self-locking latch and Class 5 balances for ease of operation. Accessories such as Mulling Bars, Subsills, Head and Jamb Channels are available.

The high performance IW8000 Window is both AAMA CW60 Rated and NFRC Certified, and meets the stringent requirements of the Miami/Dade County Protocols TAS 201, 202, and 203 for maximum protection from high winds and wind-borne debris.

- AAMA CW60 Rated Window
- Accepts 1-7/32" (31) Glazing
- 4-1/2" (114) Deep Frame to Match Entrances and Storefronts
- Thermally Insulated-NFRC Certified
- Choice of Block or Fin Frame
- Class 5 Balance for Ease of Operation
- Available in an Array of Architectural Coatings and Anodized Finishes
- Made in the U.S.A.

Hurricane Resistant
Single Hung Window

STORM FRONT™ WINDOWS

Typical Details

FOR 1-7/32" (31) GLAZING

Series IW8000 Single Hung Window
With Storm Wall™ IW3250 Curtain Wall

Maximum Frame Size
65" x 91" (1651 x 2311)

A complete set of details
in DWG format is available
at usalum.com

Hurricane (Impact) Resistant Single Hung Window • Series IW8000

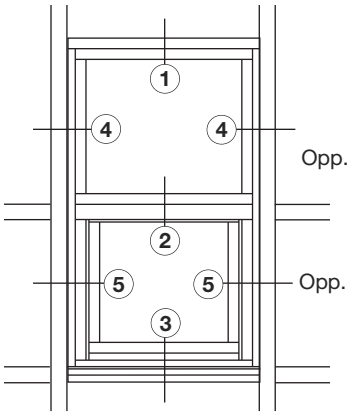

TYPICAL ELEVATION

Meets or Exceeds Specifications:

- AAMA - CW60
- AAMA/WDMA/CSA 101/1.S.2/A 440-08
  - ASTM E 283-04
  - ASTM E 330-02
  - ASTM E 331-00
  - AAMA 1503
- NFRC - NFRC 100-2004
  - NFRC 200-2004
  - NFRC 500-2004
- MIAMI/DADE COUNTY PROTOCOLS
  - TAS 201
  - TAS 202
  - TAS 203

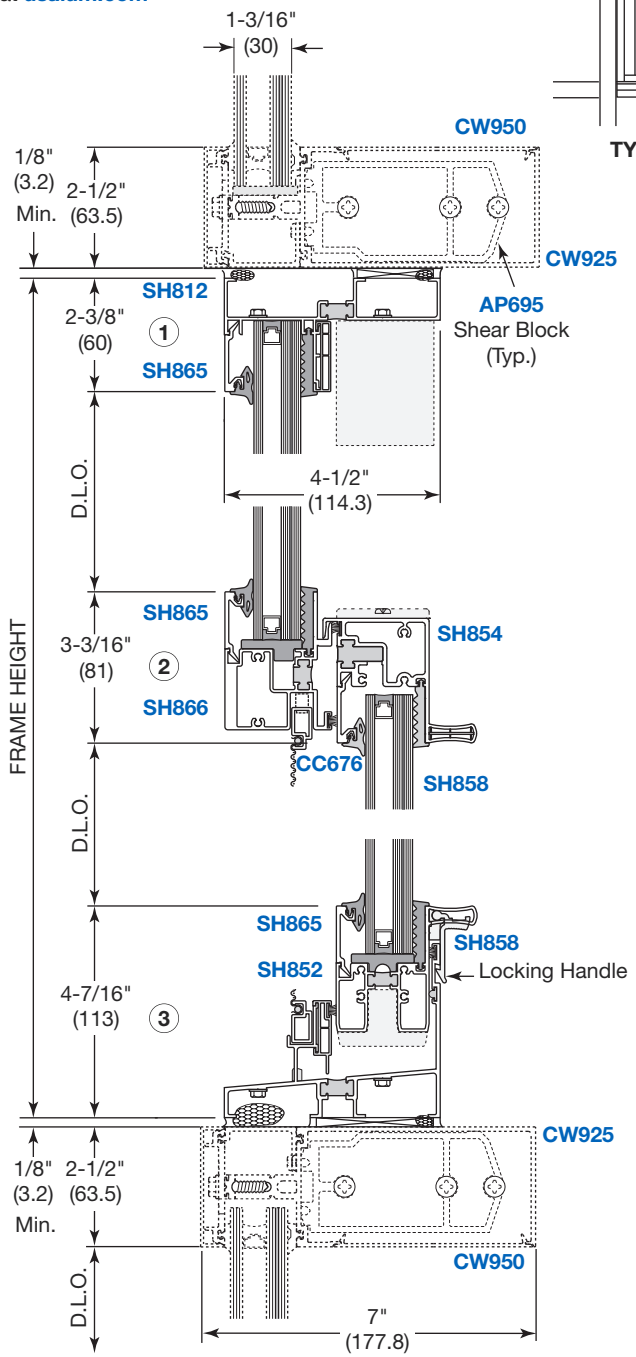

NOT TO SCALE

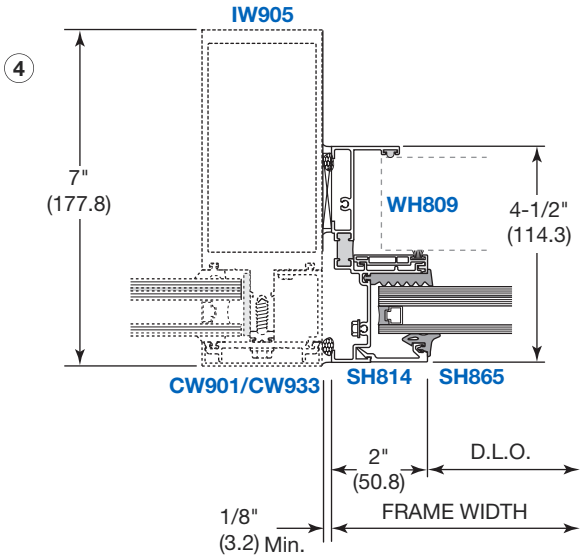

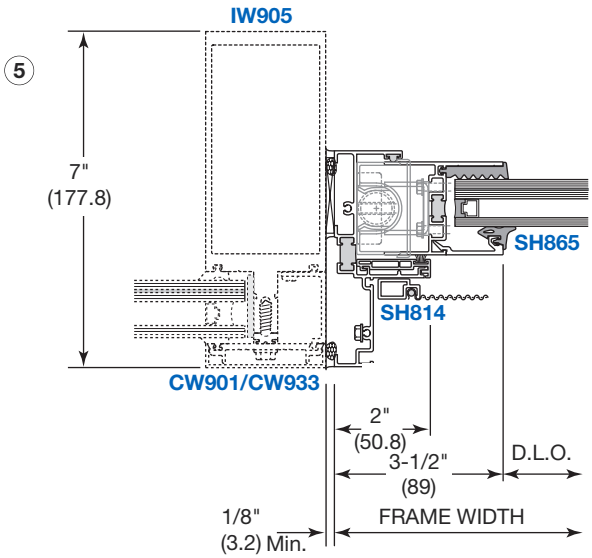

STORM FRONT™ WINDOWS

Special Features

FOR 1-7/32" (31) GLAZING

Hurricane (Impact) Resistant Horizontal Sliding Window

• Series IW8200

Storm Front™

The Series IW8200 Horizontal Sliding Window offers that rare combination of smooth operation, durability, and toughness to meet stringent requirements of the Miami/Dade County Protocols TAS 201, 202, and 203 for maximum protection from high winds and wind-borne debris.

- Tested to AAMA CW60
- Accepts 1-7/32" (31) Glazing
- Thermally Insulated-NFRC Certified
- U-Factors as Low as 0.34
- 4-1/2" (114) Deep Frame to Match Typical Building Conditions
- Choice of Block or Fin Frame
- Dry Glazed
- Self-Locking Latch and Tandem Adjustable Rollers for Ease of Operation
- Accessories Such as Screens, Mulling Bars, Subsills, Head and Jamb Channels are Available
- Available in an Array of Architectural Coatings and Anodized Finishes
- Made in the U.S.A.

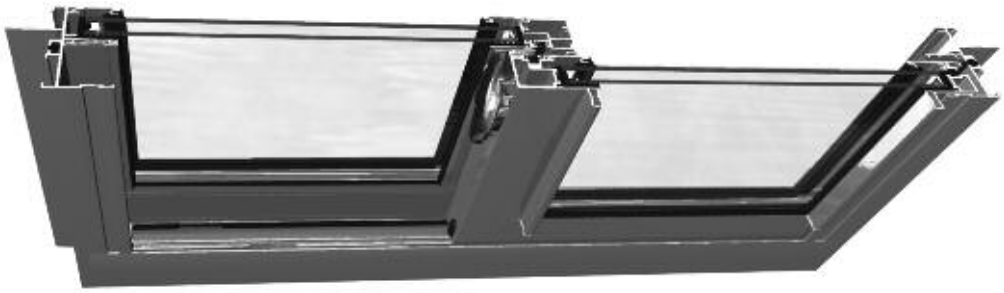

Hurricane Resistant Horizontal Sliding Window

STORM FRONT™ WINDOWS

Typical Details

FOR 1-7/32" (31) GLAZING

Series IW8200 Horizontal Sliding Window
With Storm Wall™ IW3250 Curtain Wall

Hurricane (Impact) Resistant Horizontal Sliding Window
• Series IW8200

Meets or Exceeds Specifications:

- AAMA - CW60
- AAMA/WDMA/CSA 101/1.S.2/A 440-08
  - ASTM E 283-04
  - ASTM E 330-02
  - ASTM E 331-00
  - AAMA 1503
- NFRC - NFRC 100-2004
  - NFRC 200-2004
  - NFRC 500-2004
- MIAMI/DADE COUNTY PROTOCOLS
  - TAS 201
  - TAS 202
  - TAS 203

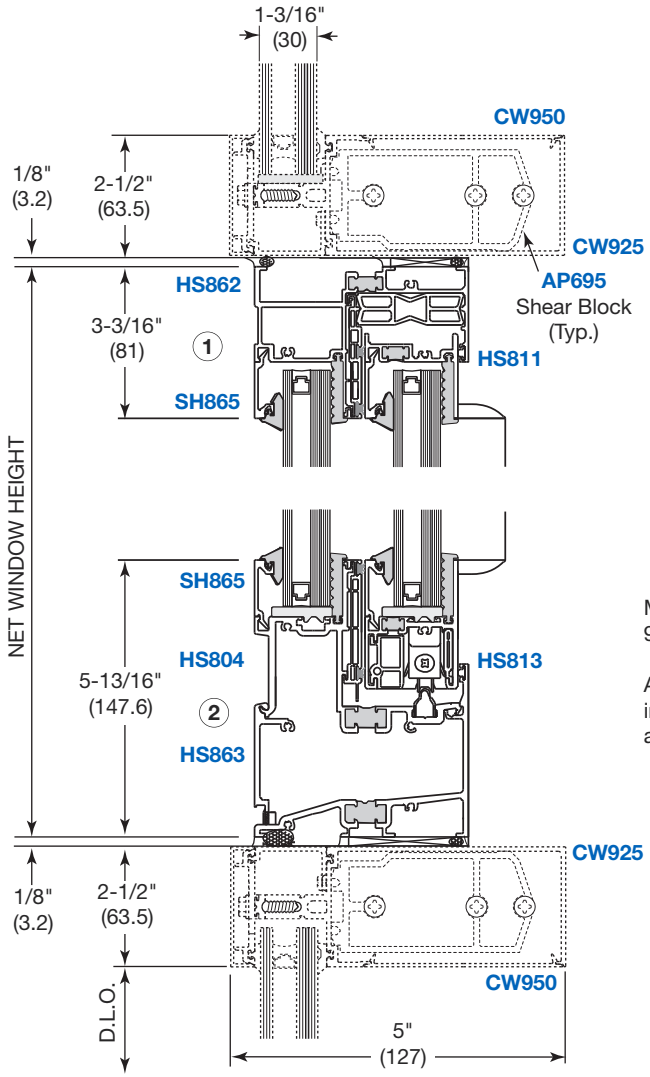

Maximum Frame Size
96" x 60" (2438 x 1524)

A complete set of details in DWG format is available at **usalum.com**

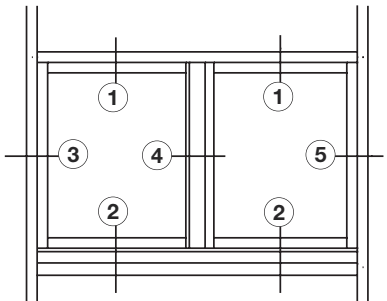

TYPICAL ELEVATION

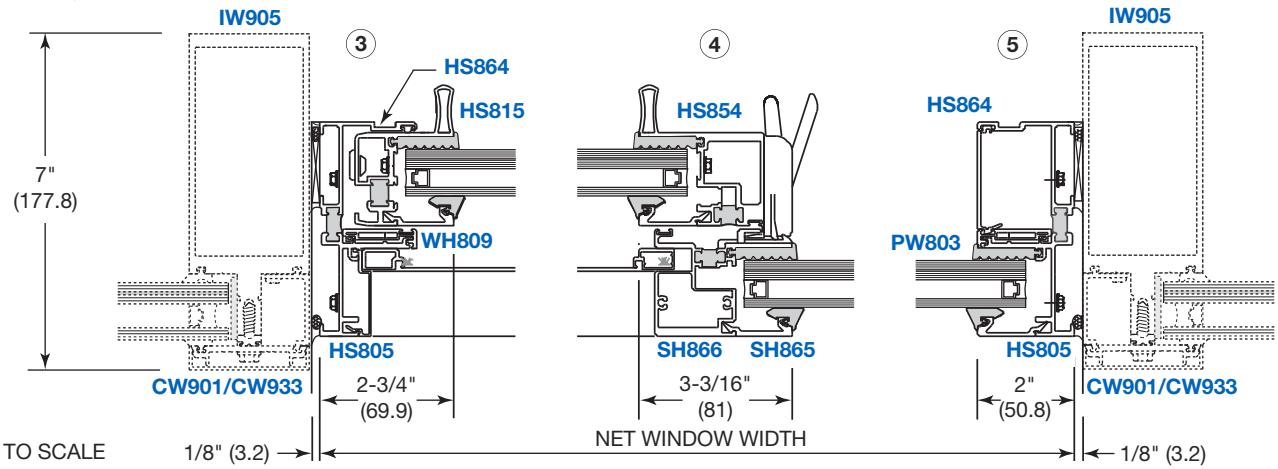

STORM FRONT™ WINDOWS

Special Features

FOR 1-7/32" (31) GLAZING

Hurricane (Impact) Resistant Fixed Window

• Series IW8100

The Series IW8100 Fixed Window offers that rare combination of durability and toughness to meet stringent requirements of the Miami/Dade County Protocols TAS 201, 202, and 203 for maximum protection from high winds and wind-borne debris.

- Tested to AAMA CW60
- Accepts 1-7/32" (31) Glazing
- Thermally Insulated-NFRC Certified
- U-Factors as Low as 0.34
- 4-1/2" (114) Deep Frame to Match Typical Building Conditions
- Choice of Block or Fin Frame
- Accessories Such as Mulling Bars, Subsills, Head and Jamb Channels are Available
- Available in an Array of Architectural Coatings and Anodized Finishes
- Made in the U.S.A.

Meets or Exceeds Specifications:

- AAMA - CW60
- AAMA/WDMA/CSA 101/1.S.2/A 440-08
  - ASTM E 283-04
  - ASTM E 330-02
  - ASTM E 331-00
  - AAMA 1503
- NFRC - NFRC 100-2004
  - NFRC 200-2004
  - NFRC 500-2004
- MIAMI/DADE COUNTY PROTOCOLS
  - TAS 201
  - TAS 202
  - TAS 203

Block Frame
Installation Method Shown

Maximum Frame Size 65" x 91" (1651 x 2311)

A complete set of details in DWG format is available at **usalum.com**

Typical Details

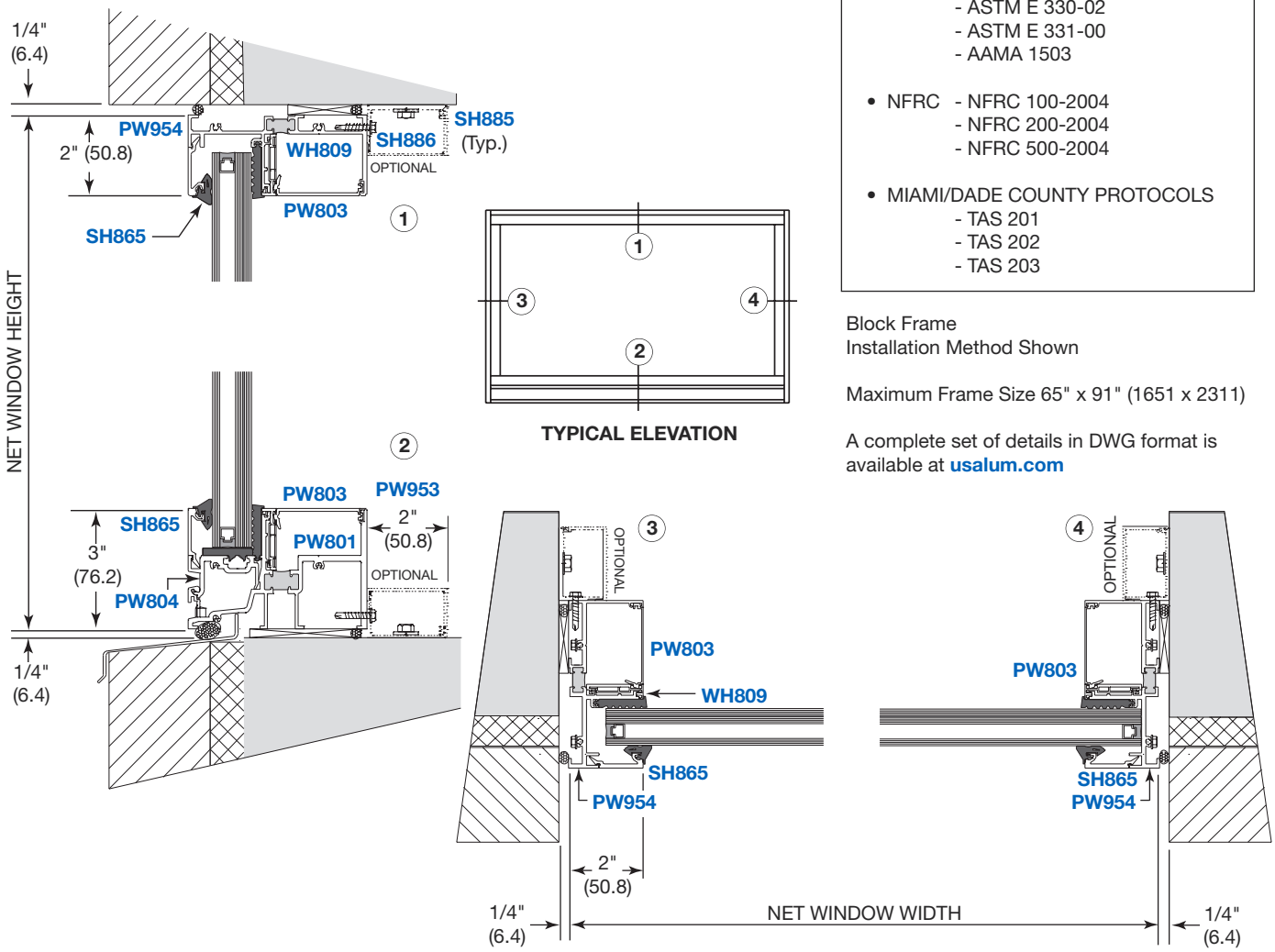

NOT TO SCALE

N

BLAST MITIGATION SYSTEMS

- Series BW3250 Curtain Wall
- Series BR7500/BW7600 BW8000/BW8100/BW8200 Windows

Toll Free Phone Service
(800) 262-5151
Ext. 5305

Toll Free Fax Service
(866) 262-3299
U.S. and Canada

CRL®
U.S. ALUMINUM

usalum.com

N BLAST MITIGATION SYSTEMS

United States Federal Courthouse
Coeur D'Alene, ID

U.S. Aluminum Blast Mitigation Systems are engineered and successfully tested to withstand explosions from pressure levels of 2.91, 4.4, and 10.8 pounds per square inch. The Defender Series BW3250 Curtain Wall has been engineered and tested to perform in accordance with UFC 4-010-01 protocols, allowing the system to be specified for DoD, GSA, and private sector projects.

Our Defender Series Blast Resistant Windows are available in single hung, fixed, and horizontal sliding versions that are all DoD Blast Rated for one PSI. All of these windows utilize high performance glazing, are AAMA Rated, NFRC Certified, and can be ordered in an array of architectural coatings and anodized finishes.

For a complete Glossary of Common Terms see pages 62-P1 thru 68-P1.

SYSTEM **PAGES**

- **Series BW3250 Curtain Wall.....01-N1 thru 16-N1**
- **Series BR7500/BW7600 Windows .....01-N2 thru 07-N2**
- **Series BW8000/BW8100/BW8200 Windows .....01-N3 thru 09-N3**

For information or other assistance, use our toll free phone or fax service numbers from anywhere in the U.S. or Canada

Toll Free Phone (800) 262-5151 Ext. 5305 Toll Free Fax (866) 262-3299

Contact us through our web site at usalum.com

BLAST MITIGATION

Table of Contents

Blast Resistant Curtain Wall
• Series BW3250

DEFENDER
BLAST MITIGATION PRODUCTS

SECTION N1 PAGE

SPECIFICATIONS .....02-N1 and 03-N1
TECHNICAL DATA 04-N1
SPECIAL FEATURES 05-N1
TYPICAL DETAILS .....06-N1 thru 08-N1
TYPICAL DETAILS FOR MID-SPAN ANCHORS AND MULLION SPLICING .....09-N1 and 10-N1
TYPICAL DETAILS FOR MULLION ANCHORS 11-N1
WINDLOAD AND DEADLOAD CHARTS 12-N1
ACCESSORIES .....13-N1 thru 16-N1

Project: U.S. Federal Courthouse, Coeur d´Alene, ID

Due to the diversity in state/provincial, local, and federal laws and codes that govern the design and application of architectural products, it is the responsibility of the individual architect, owner, and installer to ensure that products selected for use on projects comply with all applicable building codes and laws. U.S. Aluminum exercises no control over the use or application of its products, glazing materials, and operating hardware, and assumes no responsibility thereof.

The rapidly changing technology within the architectural aluminum products industry demands that U.S. Aluminum reserve the right to revise, discontinue or change any product line, specification or electronic media without prior written notice.

NOTE: Dimensions in parentheses ( ) are millimeters unless otherwise noted.
Other metric units shown in this publication are:

m - meter	Kg - kilogram
Pa - pascal	KPa - kilopascal
MPa - megapascal	

BLAST MITIGATION

Specifications

Blast Resistant Curtain Wall • Series BW3250

SECTION 08 44 13 ALUMINUM CURTAIN WALL SYSTEMS

I. GENERAL DESCRIPTION

Work Included: Furnish all necessary materials, labor, and equipment for the complete installation of aluminum framing as shown on the drawings and specified herein. *(Specifier Note: It is suggested that related items such as aluminum entrance doors, glass, and sealants be included whenever possible).*

Work Not Included: Structural support of the framing system, interior closures and trim. *(Specifier list other exclusions).*

Related Work Specified Elsewhere: *(Specifier list).*

QUALITY ASSURANCE

Drawings and specifications are based on the Series BW3250 Curtain Wall System as manufactured by U.S. Aluminum. Whenever substitute products are to be considered, supporting technical literature, samples, drawings and performance data must be submitted 10 days prior to bid in order to make a valid comparison of the products involved. Test reports certified by an independent test laboratory must be made available upon request.

PERFORMANCE REQUIREMENTS

Air Infiltration: shall be tested in accordance with ASTM E 283. Infiltration shall not exceed .06 CFM per square foot (.0003m3/sm2) fixed area when tested at 6.24 psf (300 Pa).

Water Infiltration: shall be tested in accordance with ASTM E 331. No water penetration at test pressure of 15 psf (718 Pa).

Structural Performance: shall be tested in accordance with ASTM E 330 and based on:

- Maximum deflection of L/175 of the span
- Allowable stress with a safety factor of 1.65

The system shall perform to this criteria under a 1 psi pressure load.

Thermal Performance: Series BW3250 shall be tested in accordance with AAMA 1503, and NFRC-100.

Testing Procedures: ASTM 283, E 331, and E 330 - Laboratory performance testing. AAMA 503-08 - Newly Installed Curtain Walls. AAMA 511-08 - Installed Curtain Walls after six months.

Blast Mitigation: System shall meet or exceed the following requirements of the UFC 4-010-01, "DoD Minimum Anti-terrorism Standard for Buildings."

Section B-3.1 Standard 10: Windows, Skylights, and Glazed Doors. To minimize hazards from flying glass fragments, apply the provisions for glazing and window, skylight, and glazed door frames below for all new and existing inhabited buildings covered by these standards. Glazing and frames must work as a system to ensure that their hazard mitigation is effective. These provisions apply even if the minimum standoff distances are met. The specific requirements below provided conventional standoff distances are met, will result in windows, skylights, and glazed doors that comply with this standard for windows provided their visual glazing openings do not exceed 32 square feet (3 m^2)

Section B-3.1.1 Glazing: Insulated glass units, use 1/4" (6) laminated glass inner pane as a minimum.

Section B-3.1.2.1 Frame Member Design: Steel members may be designed using ultimate yield stresses and aluminum members may be designed based on a 0.2% offset yield strength. Equivalent static design loads for the window, skylight, and door members shall be 1 lb per in^2 (7 kilopascals) applied to the surface of the glazing and frame. Deformations shall not exceed 1/60 of the unsupported member lengths.

Section B-3.1.2.2 Glazing Frame Bite: The glazing shall have a minimum frame bite of 11/16" (17.5) for structurally glazed systems and 1" (25) for window systems that are not structurally glazed.

Section B-3.1.2.2 Connection Design: Equivalent static design loads for connections of the window, skylight, or door frame to the surrounding walls or roof, hardware and associated connections, and glazing stop connections shall be 10.8 lbs per in^2 (75 kilopascals) for glazing panels with a vision area less than or equal to 10.8 ft^2 (1.0 m^2) and 4.4 lbs per in^2 (30 kilopascals) for glazing panels with a vision area greater than 10.8 ft^2 (1.0 m^2) but less than or equal to 32 ft^2 (3.0 m^2). Loads shall be applied to the surface of the glazing and frame. Connections and hardware may be designed based on ultimate strength for steel and 0.2% offset yield strength for aluminum.

Section B-3.3 Standard 12 Exterior Doors: For all new and existing buildings covered by these standards, ensure that all exterior doors into inhabited areas open outwards. By doing so, the doors will seat into the door frames in response to an explosive blast, increasing the likelihood that the doors will not enter the buildings as hazardous debris. Alternatively, position doors such that they will not be propelled into rooms if they fail in response to a blast or provide other means to ensure they do not become hazards to building occupants.

Glazing and Glazing Systems Subjected to Airblast Loadings: System shall be tested in accordance with ASTM F 1642.

II. PRODUCTS MATERIALS

Extrusions shall be 6063-T6 alloy and temper (ASTM B221 alloy T6 temper). Fasteners, where exposed, shall be aluminum, stainless steel or zinc plated steel in accordance with ASTM A 164. Perimeter anchors shall be aluminum or steel, providing the steel is properly isolated from the aluminum. Glazing gaskets shall be E.P.D.M. elastomeric extrusions.

BLAST MITIGATION

Specifications

Blast Resistant Curtain Wall
• Series BW3250

SECTION 08 44 13 ALUMINUM CURTAIN WALL SYSTEMS

FINISH
All exposed framing surfaces shall be free of scratches and other serious blemishes. Aluminum extrusions shall be given a caustic etch followed by an anodic oxide treatment to obtain...
(Specify one of the following):
_____#11 Clear anodic coating
_____#22 Dark Bronze anodic coating
_____#33 Black anodic coating
A Fluoropolymer paint coating conforming with the requirements of AAMA 2605. Color shall be *(Specify a U.S. Aluminum standard color).*

FABRICATION
All mullions and horizontals shall have flexible (PVC) thermal break material located on exterior side of glass plane. Exterior glazing seal gasket shall be secured by extruded aluminum pressure plates fastened to main grid members. Provisions shall be made at all sealed horizontals to weep moisture accumulation to the exterior. A cover shall be snapped over pressure plate to show only a sharp, uninterrupted exterior profile.
Framing members shall provide for straight-in glazing on all sides, with through sightlines and no projecting stops or face joints. Vertical and horizontal framing members shall have a nominal width of 2-1/2" (63.5). Overall depth of system shall be *(Specify).*
System shall provide for two piece horizontal framing so that all fasteners at intersection of horizontal and vertical members will be concealed. There shall be no exposed fasteners at perimeter sections.

III. EXECUTION INSTALLATION
All glass framing shall be set in correct locations as shown in the details and shall be level, square, plumb, and in alignment with other work in accordance with the manufacturer's installation instructions and approved shop drawings. All joints between framing and the building structure shall be sealed in order to secure a watertight installation.

PROTECTION AND CLEANING
After installation the General Contractor shall adequately protect exposed portions of aluminum surfaces from damage by grinding and polishing compounds, plaster, lime, acid, cement or other contaminants. The General Contractor shall be responsible for final cleaning.

Project: Orlando Immigration Center, Orlando, FL

BLAST MITIGATION

Technical Data

Blast Resistant Curtain Wall
• Series BW3250

Security, versatility, and economics make Series BW3250 Blast Resistant Curtain Wall a defense standard for low to mid-rise applications where protection from blast shock wave is required. Series BW3250 is thermally improved by a continuous thermal spacer interlocked with the horizontal and vertical pressure plates. Dual colors can be achieved by specifying different finishes for the exterior face covers and interior mullions. Two piece horizontals and extruded shear blocks allow for a concealed horizontal to vertical joint. These joint intersections also have concealed injection molded End Dams for controlling any infiltrated water.

DEFENDER
BLAST MITIGATION PRODUCTS

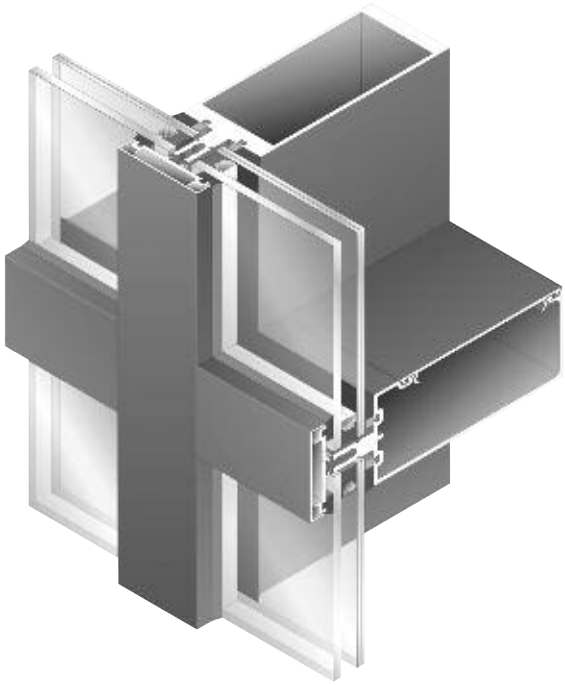

SERIES BW3250
Blast Resistant Curtain Wall

SERIES	WIDTH	OVERALL DEPTH	GLAZING INFILL	APPLICATIONS
BW3250	2-1/2" (63.5)	8" (203.2)	1" (25)	Low-Rise to Mid-Rise Buildings Where Blast Resistance is Required.

For custom size and profile extrusions please visit **usalum.com.**

GLASS SIZES*	
Glass Width and Height	= Daylight Opening + 1-3/8" (34.9)

*These formulae do not take into account glass tolerances. Consult glass manufacturer before ordering glass.

BLAST MITIGATION

Special Features

Blast Resistant Curtain Wall
• Series BW3250

The DEFENDER Series BW3250 Blast Resistant Curtain Wall System has been engineered specifically to offer maximum protection within a specified blast radius. BW3250 is an extension of the Series 3250 Curtain Wall Systems, utilizing many of the same proven design concepts. BW3250 requires that 1" (25) insulating impact resistant glass be used.

Injection molded Closure Plates at top and bottom of verticals prevent perimeter seal failure. Injection molded End Dams at vertical and horizontal intersections control any infiltrated water. See page 16-N1 for additional information.

NOTE: To accelerate installation times with pinpoint accuracy of Horizontal Shear Blocks to Curtain Wall Mullions see pages 56-P1 and 57-P1.

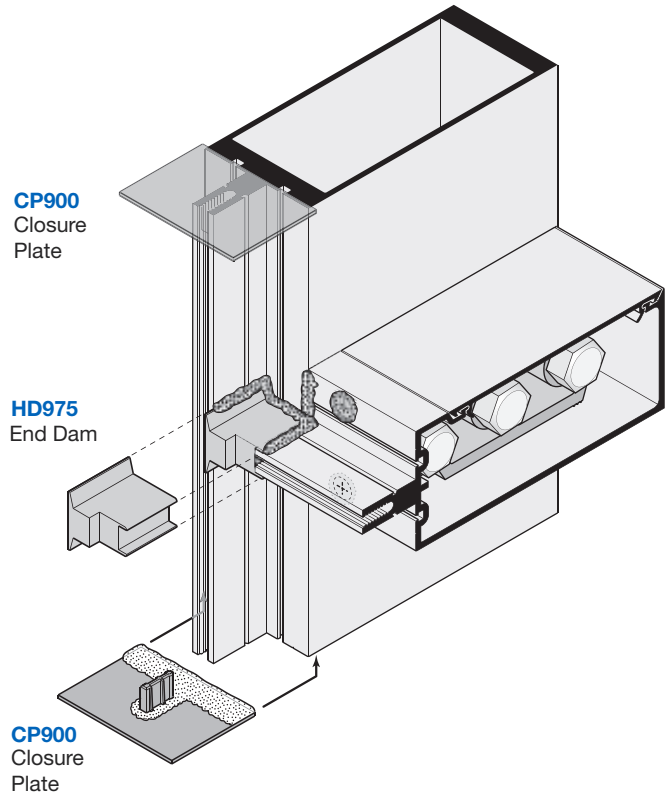

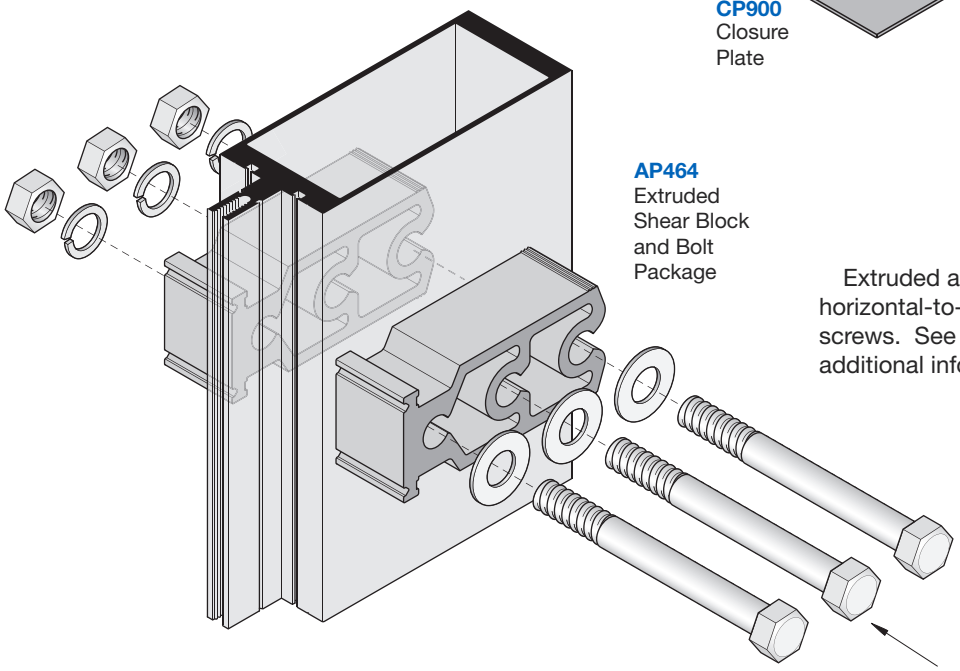

Extruded aluminum Shear Blocks for tight horizontal-to-vertical joinery with no exposed screws. See pages 13-N1 and 14-N1 for additional information.

Center bolt in Shear Block connections only required at 10.8 psi conditions.

N

BLAST MITIGATION

Typical Details

Blast Resistant Curtain Wall • Series BW3250

FOR 2.91 PSI

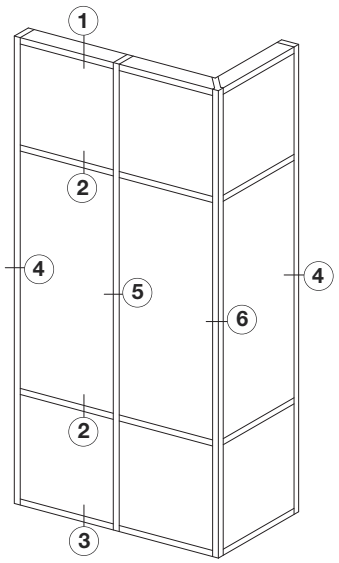

TYPICAL ELEVATION

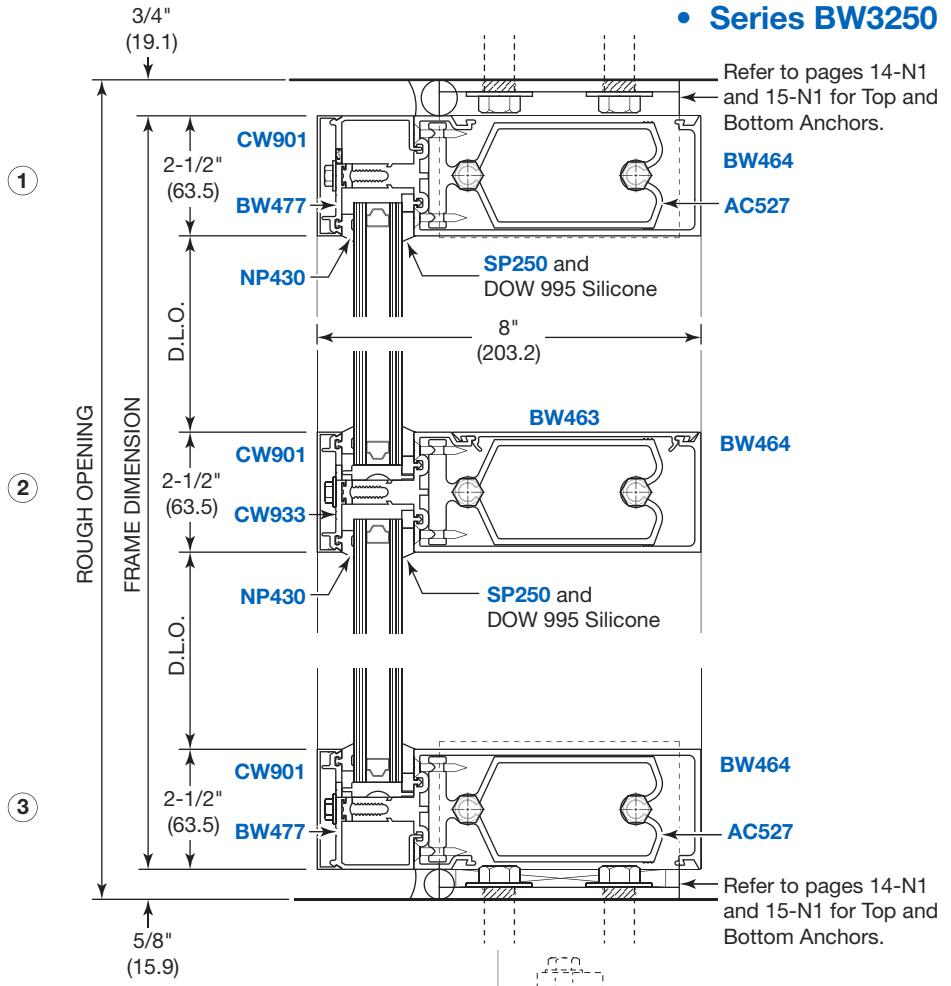

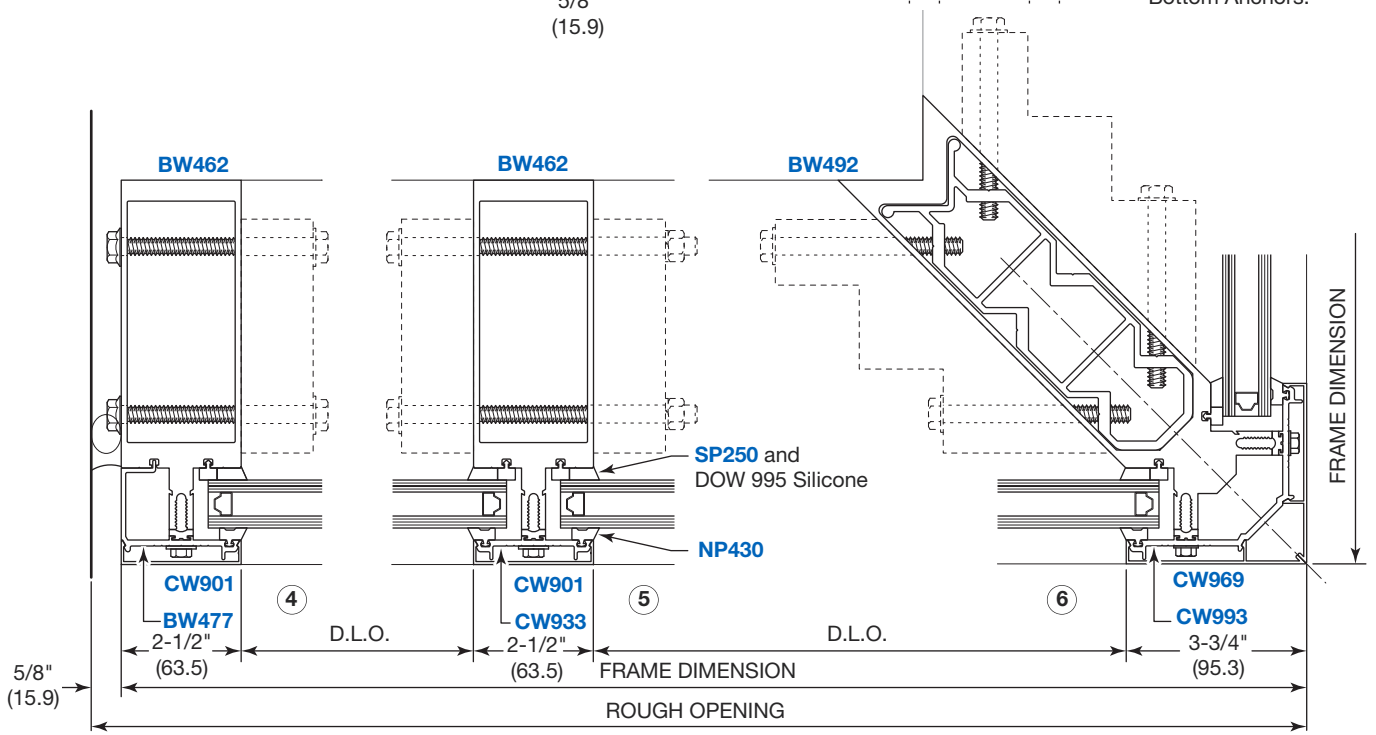

NOT TO SCALE

BLAST MITIGATION

Typical Details

Blast Resistant Curtain Wall • Series BW3250

FOR 4.4 AND 10.8 PSI

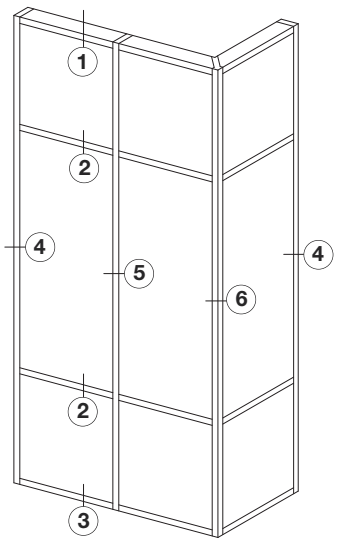

TYPICAL ELEVATION

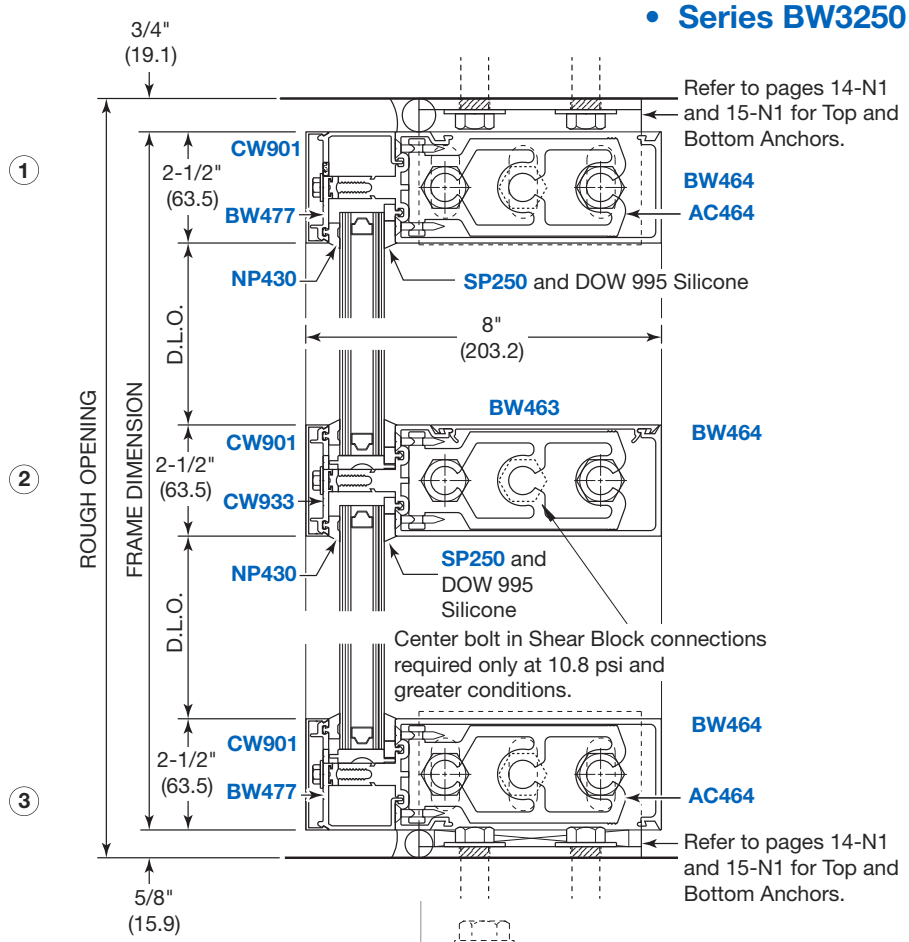

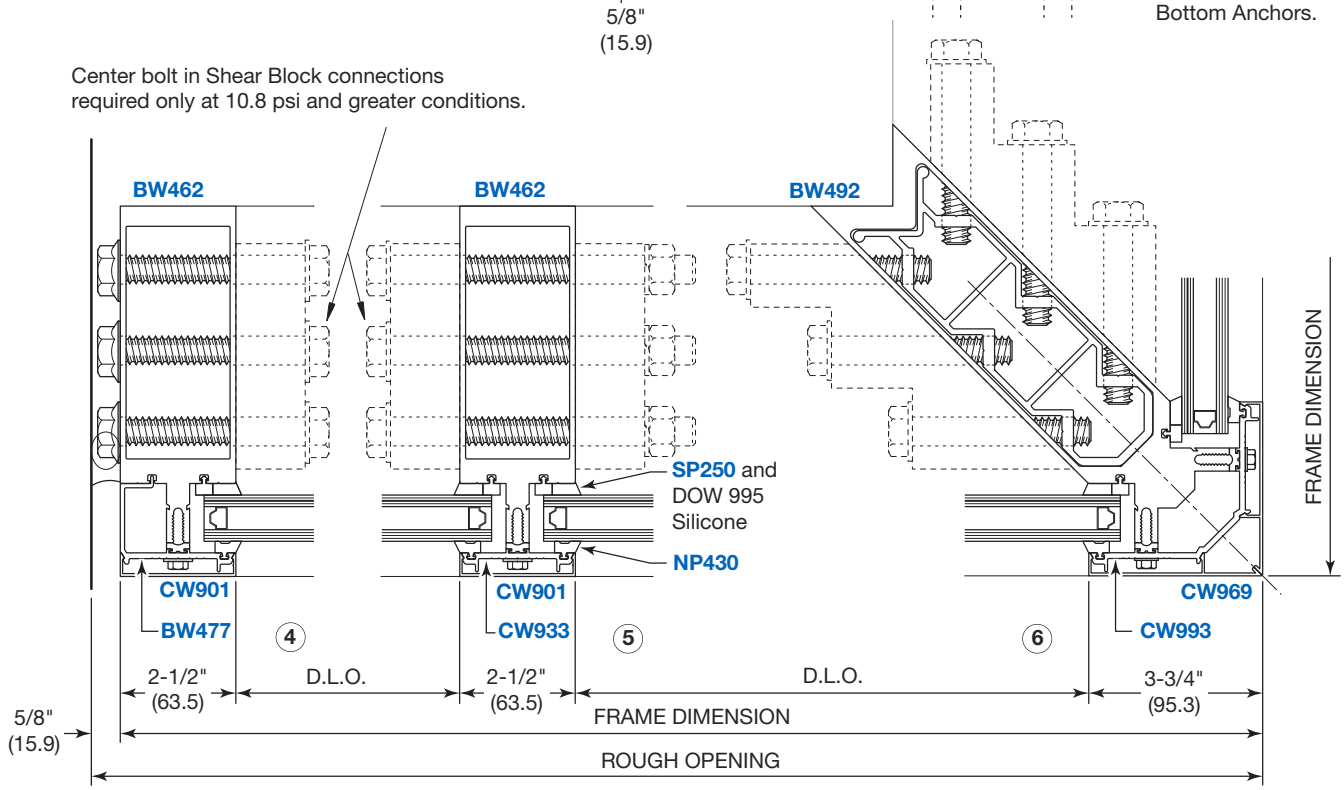

NOT TO SCALE

BLAST MITIGATION

Typical Details

Blast Resistant Curtain Wall • Series BW3250

MID-SPAN ANCHORS AND MULLION SPLICE

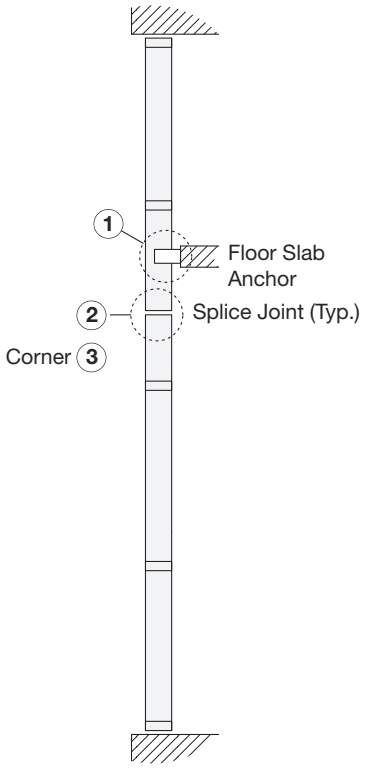

SECTION DETAIL

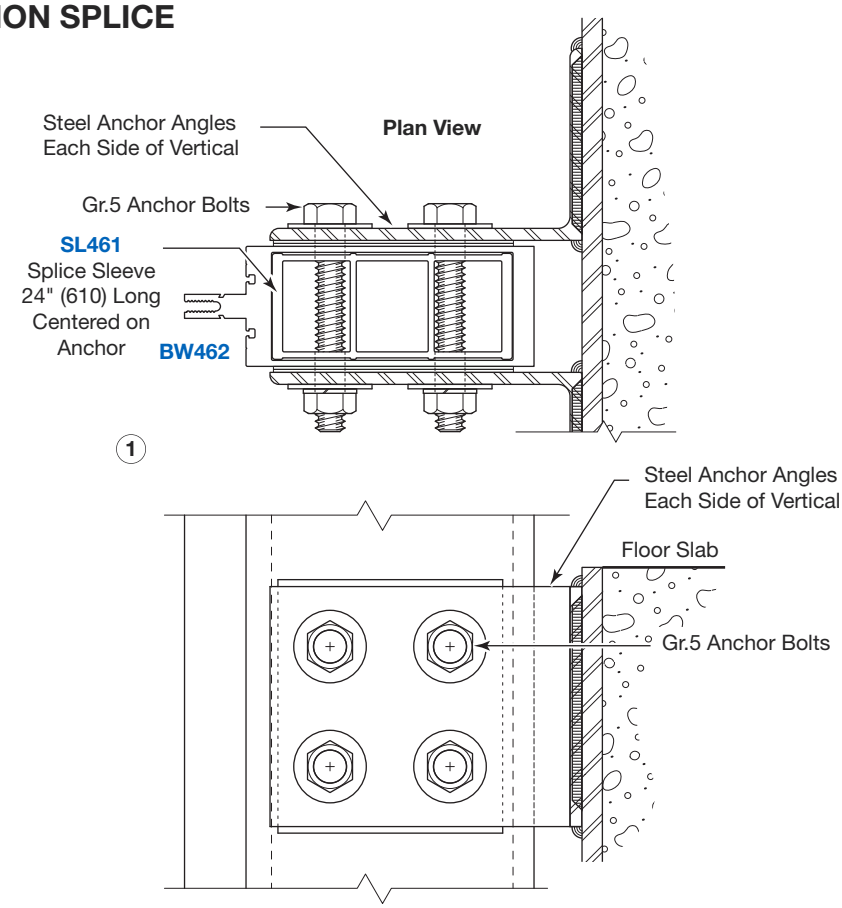

NOTE:
Steel Anchor Sizes and Thickness Vary per Project.

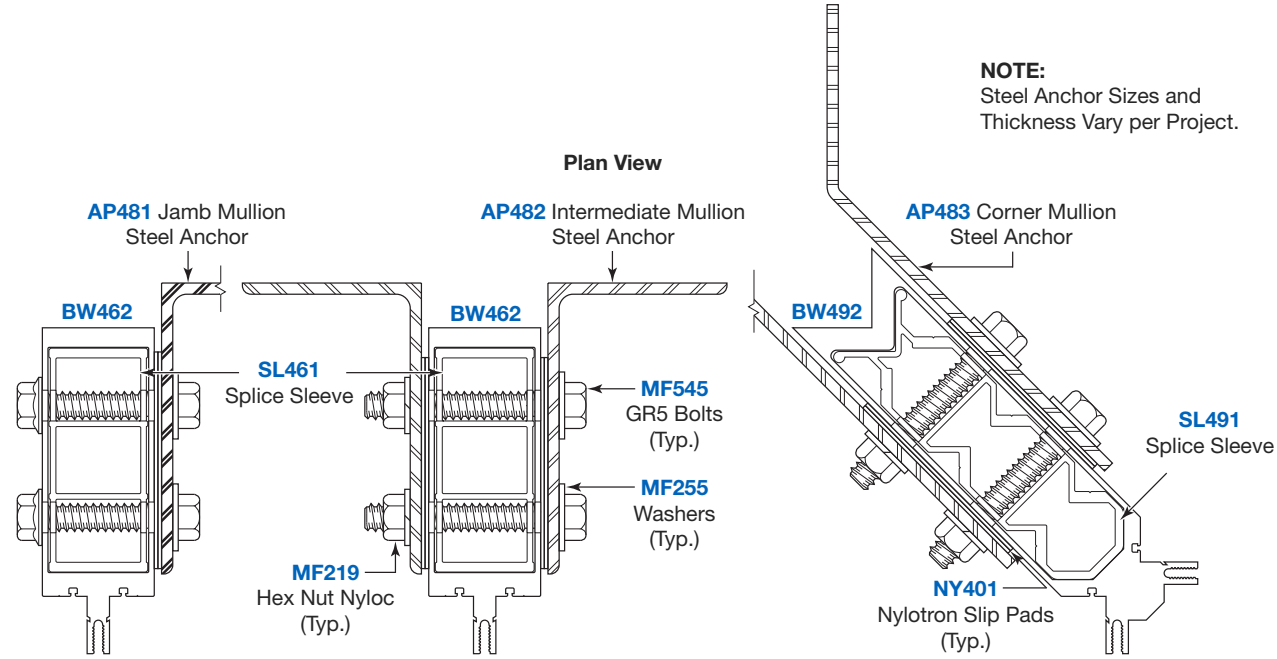

Jamb Mullion Anchor

Intermediate Mullion Anchor

Corner Mullion Anchor

BLAST MITIGATION

Typical Details

Blast Resistant Curtain Wall
• Series BW3250

MID-SPAN ANCHORS AND MULLION SPLICE

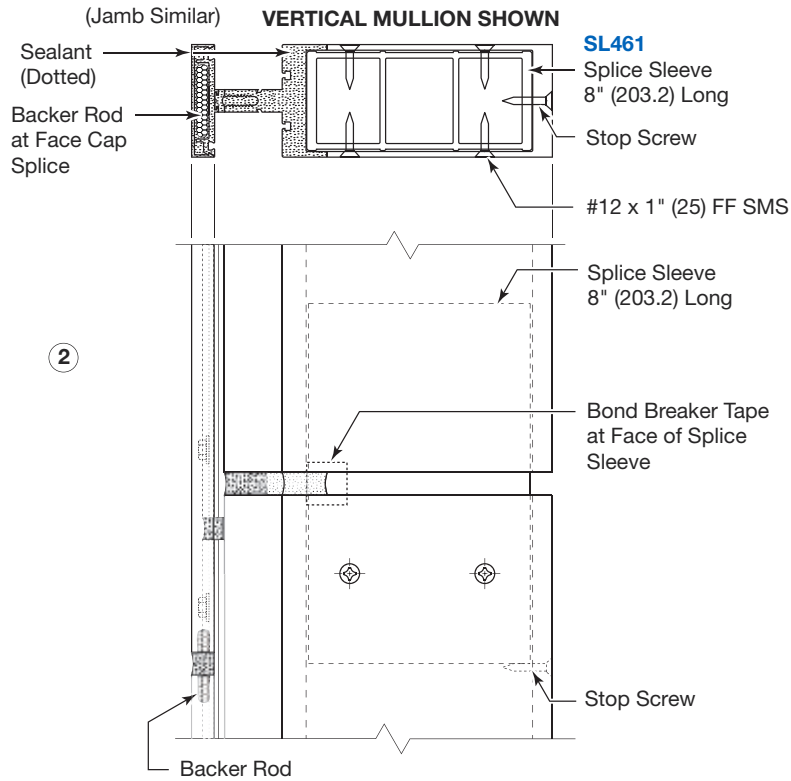

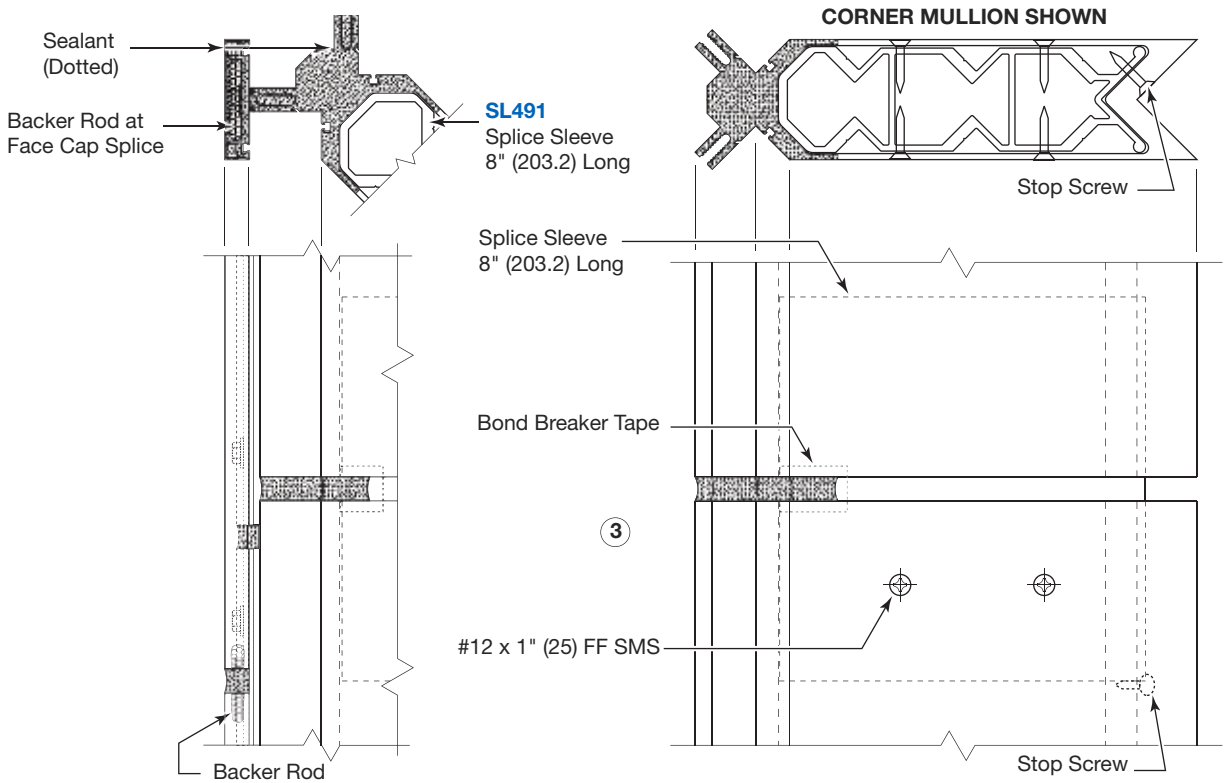

BLAST MITIGATION

Typical Details

Blast Resistant Curtain Wall
• Series BW3250

HEAD AND SILL ANCHORS FOR 2.91 PSI

Plan View
Sills Shown, Heads Similar

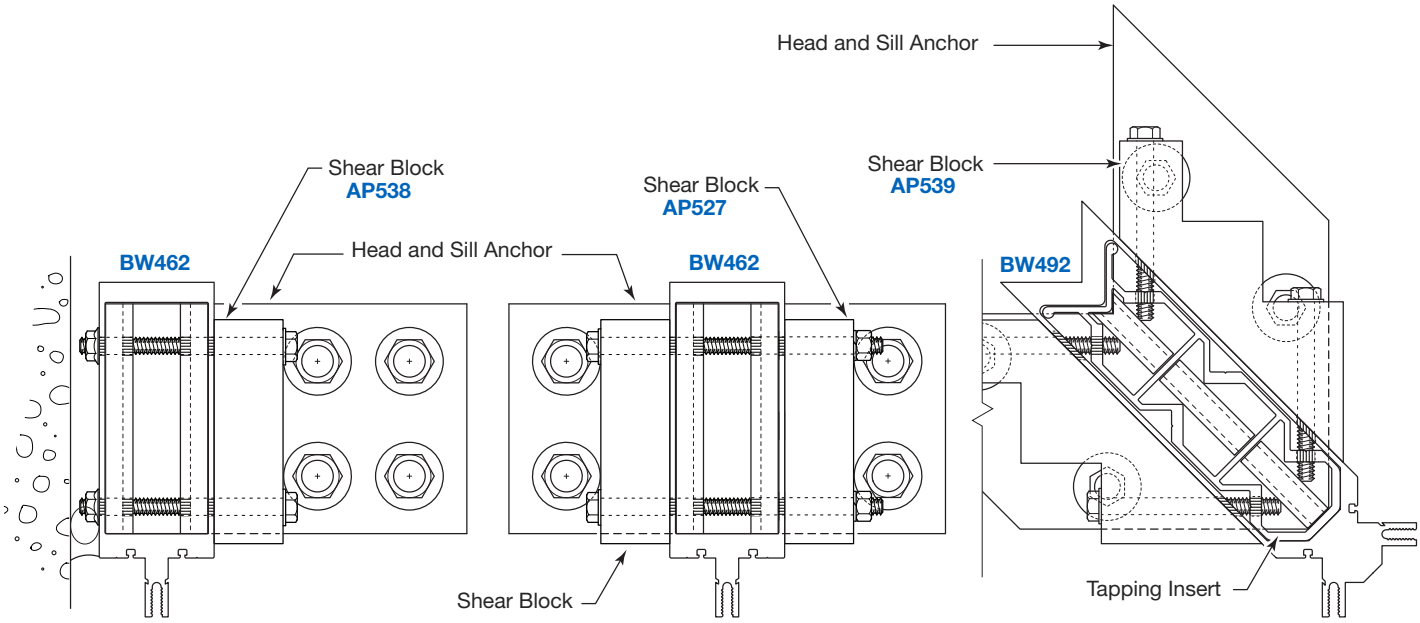

Head and Sill
Jamb Mullion Anchor
AP972

Head and Sill
Intermediate Mullion Anchor
AP971

Head and Sill
Corner Mullion Anchor
AP492

N

Typical Details

HEAD AND SILL ANCHORS FOR 4.4 AND 10.8 PSI

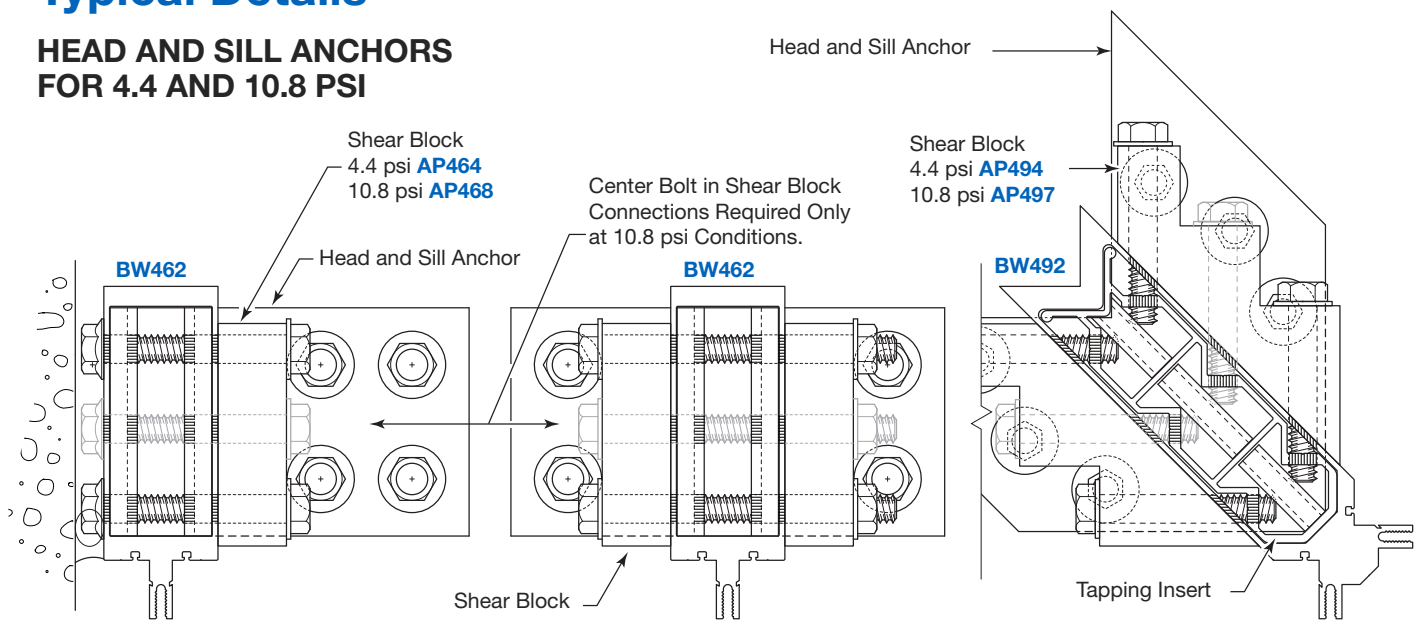

Head and Sill
Jamb Mullion Anchor
AP972

Head and Sill
Intermediate Mullion Anchor
AP971

Head and Sill
Corner Mullion Anchor
AP492

BLAST MITIGATION

Typical Details

Blast Resistant Curtain Wall
• Series BW3250

DOOR FRAMING - 1-5/16" (33) GLAZING

Series BW3250 Blast Resistant Curtain Wall
Shown with Series IG600 Entrance Door.

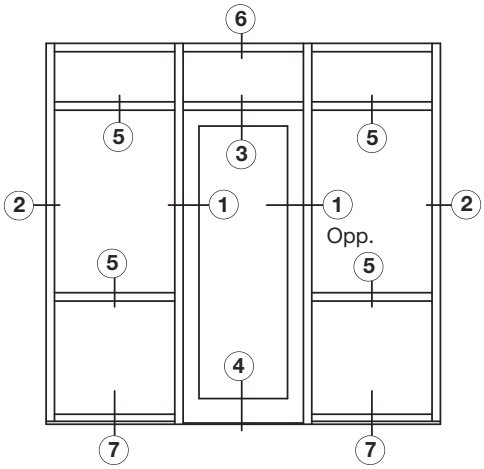

TYPICAL ELEVATION

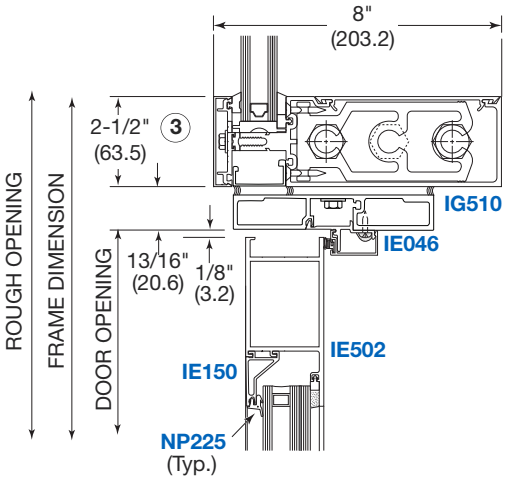

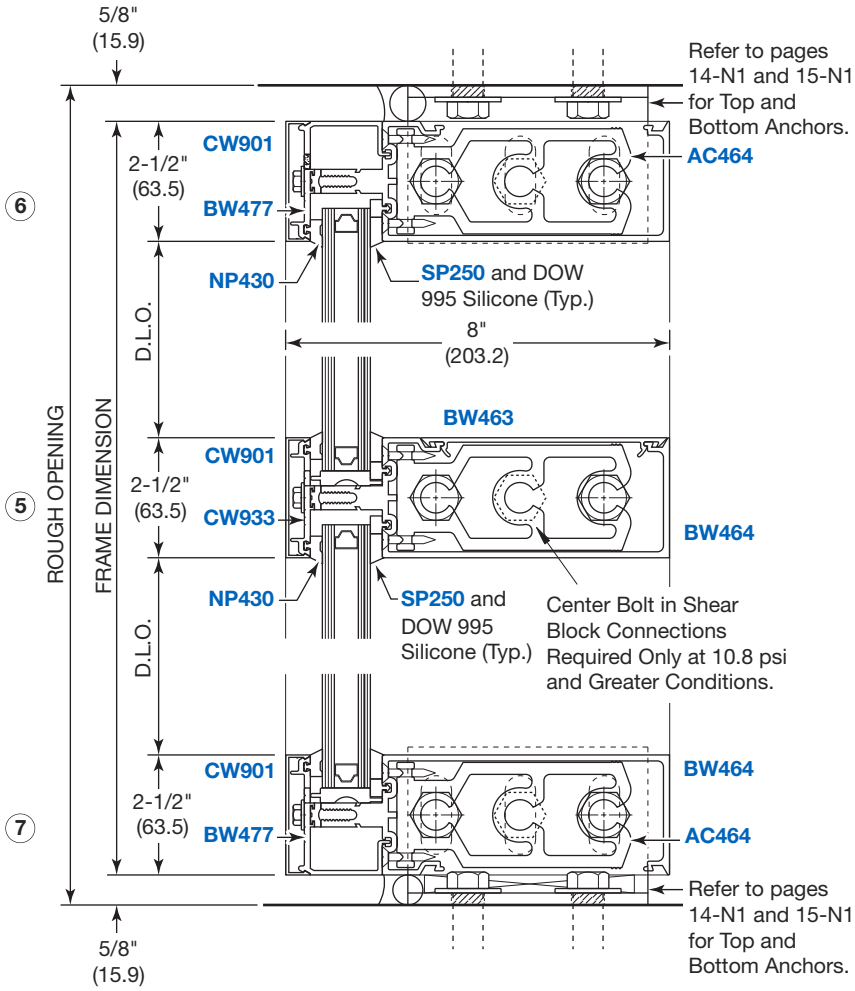

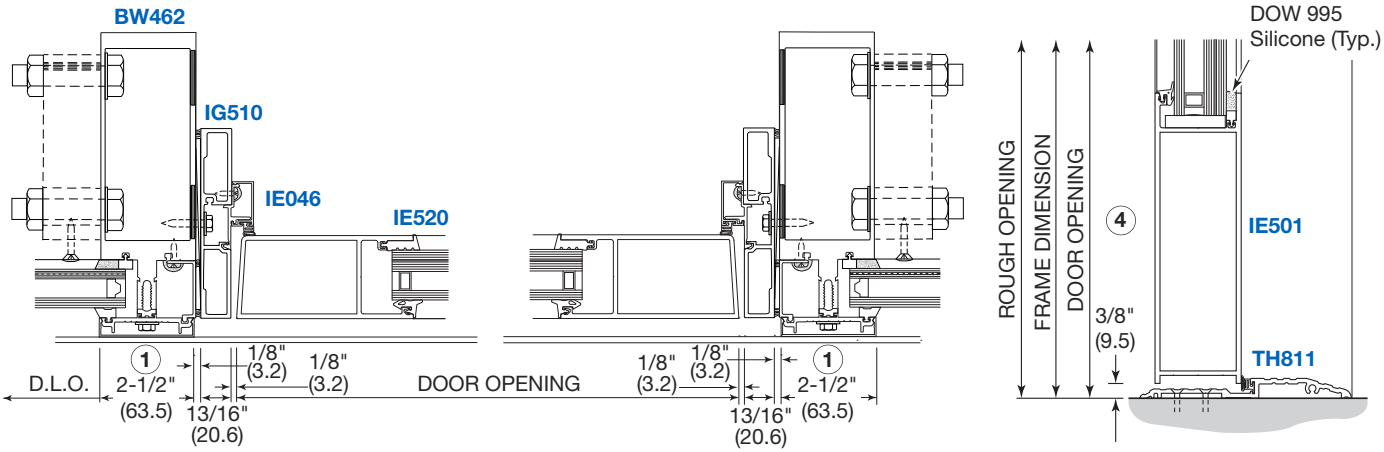

NOT TO SCALE

BLAST MITIGATION

Windload and Deadload Charts

Blast Resistant Curtain Wall
• Series BW3250

CAPTURED VERTICAL MULLIONS FOR 1" GLAZING

Curve **A** = 30 PSF
Curve **B** = 35 PSF
Curve **C** = 40 PSF
Curve **D** = 45 PSF

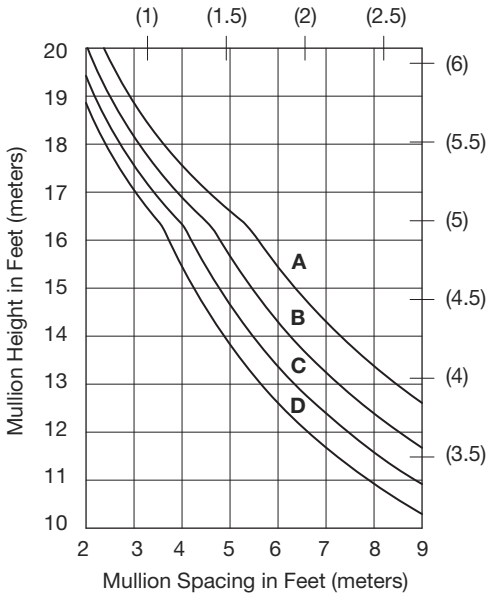

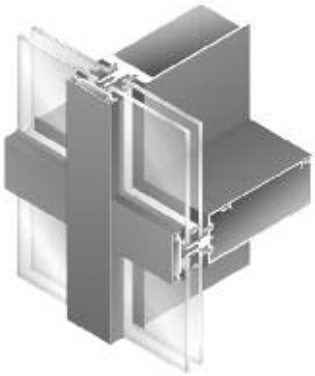

Blast Resistant Captured
Vertical Glazed Curtain Wall

BW462
Ixx = 25.619 (1066.45 X 10^4)
Sxx = 6.777 (111.04 X 10^3)

N

CAPTURED HORIZONTALS FOR 1" GLAZING

Curve **A** = 1/4 Point Setting Block Locations
Curve **B** = 1/8 Point Setting Block Locations

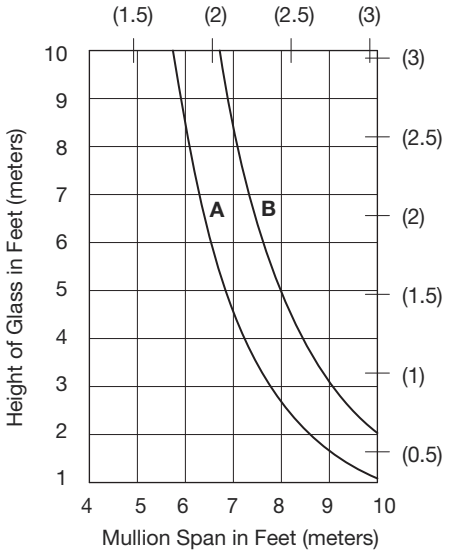

BW464
Iyy = 1.397
Sxx = .894

BLAST MITIGATION

Accessories

Blast Resistant Curtain Wall
• Series BW3250

PART NO.	HORIZONTAL SHEAR BLOCK AND BOLT PACKAGES FOR UP TO 2.91 PSI	PKG. QTY.
AP538	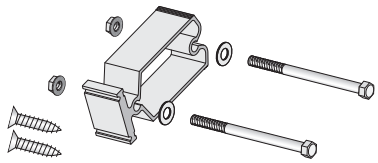 **Jamb Mullion:** (1) AC527 Shear Block (2) MF353 3/8"-16 x 5" (127) GR5 Bolts (2) MF251 3/8" (9.5) Flat Washers (2) MF304 3/8"-16 Flange Nuts (2) ST277 #12 x 1" (25) FH SMS	6
AP527	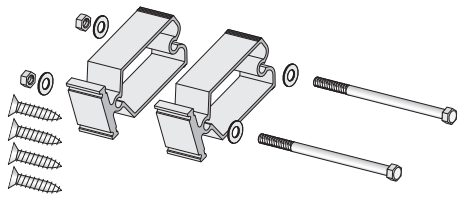 **Intermediate Mullion:** (2) AC527 Shear Blocks (2) MF368 3/8"-16 x 6-1/2" (165) GR5 Bolts (4) MF251 3/8" (9.5) Flat Washers (2) MF265 3/8"-16 Hex Nuts, NyLoc (4) ST277 #12 x 1" (25) FH SMS	12
AP539	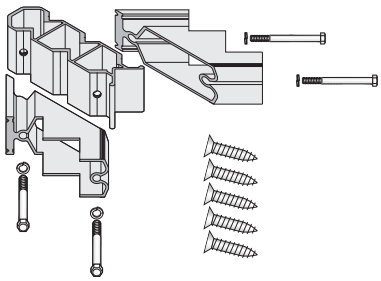 **Corner Mullion:** (2) AC539 Shear Blocks (4) MF342 3/8"-16 x 4" (102) GR5 Bolts (4) MF254 3/8" (9.5) Lock Washers (1) TB539 Tapping Block (5) ST277 #12 x 1" (25) FH SMS	6
PART NO.	**HORIZONTAL SHEAR BLOCK AND BOLT PACKAGES FOR UP TO 4.4 PSI**	**PKG. QTY.**
AP464	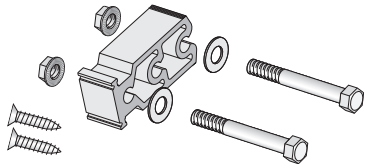 **Jamb Mullion:** (1) AC464 Shear Block (2) MF545 5/8"-11 x 4-1/2" (114) GR5 Bolts (2) MF255 5/8" (16) Flat Washers (2) MF529 5/8"-11 Flange Nuts (2) ST277 #12 x 1" (25) FH SMS	6
AP465	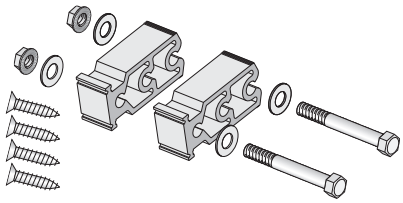 **Intermediate Mullion:** (2) AC464 Shear Blocks (2) MF565 5/8"-11 x 6-1/2" (165) GR5 Bolts (4) MF255 5/8" (16) Flat Washers (2) MF219 5/8"-11 Hex Nuts, NyLoc (4) ST277 #12 x 1" (25) FH SMS	12
AP494	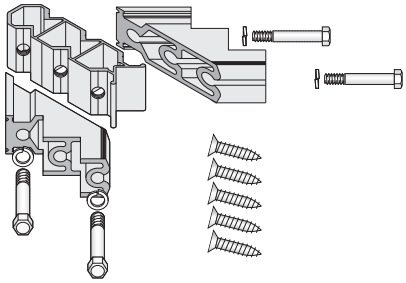 **Jamb Mullion:** (2) AC494 Shear Blocks (4) MF540 5/8"-11 x 4" (102) GR5 Bolts (4) MF256 5/8" (16) Lock Washers (1) TB490 Tapping Block (5) ST277 #12 x 1" (25) FH SMS	6

BLAST MITIGATION

Accessories

Blast Resistant Curtain Wall
• Series BW3250

PART NO.	HORIZONTAL SHEAR BLOCK AND BOLT PACKAGES FOR UP TO 10.8 PSI	PKG. QTY.
AP467	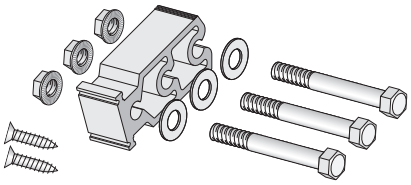 **Jamb Mullion:** (1) AC464 Shear Block (3) MF545 5/8"-11 x 4-1/2" (114) GR5 Bolts (3) MF255 5/8" (16) Flat Washers (3) MF529 5/8"-11 Flange Nuts (2) ST277 #12 x 1" (25) FH SMS	6
AP468	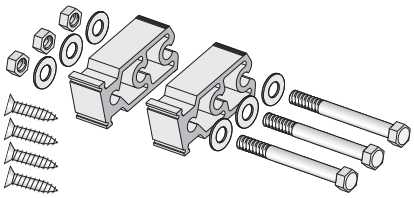 **Intermediate Mullion:** (2) AC464 Shear Blocks (3) MF565 5/8"-11 x 6-1/2" (165) GR5 Bolts (6) MF255 5/8" (16) Flat Washers (3) MF219 5/8"-11 Hex Nuts, NyLoc (4) ST277 #12 x 1" (25) FH SMS	12
AP497	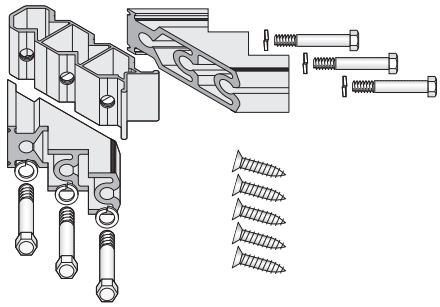 **Corner Mullion:** (2) AC494 Shear Blocks (6) MF540 5/8"-11 x 4" (102) GR5 Bolts (6) MF256 5/8" (16) Lock Washers (1) TB490 Tapping Block (5) ST277 #12 x 1" (25) FH SMS	6

PART NO.	TOP AND BOTTOM JAMB, AND MID SPAN ANCHORS	PKG. QTY.
AP481	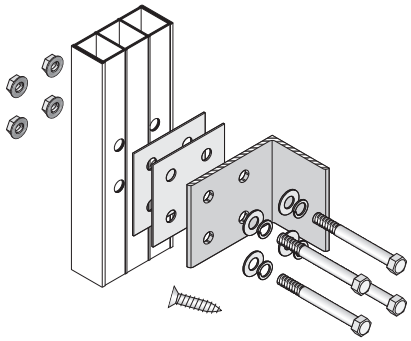 **Jamb Mullion Anchor:** (1) SL462 Anchor Support (2) NY401 Slip pads (4) MF535 5/8"-11 x 3-1/2" (89) GR5 Bolts (4) MF255 5/8" (16) Flat Washers (1) ST277 #12 x 1" (25) FH SMS	6
AP972	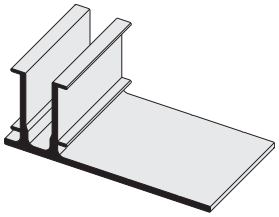 Top and Bottom Anchor for Jamb Mullion	6

N

BLAST MITIGATION

Accessories

Blast Resistant Curtain Wall
• Series BW3250

PART NO.	TOP AND BOTTOM JAMB, AND MID SPAN ANCHORS	PKG. QTY.
AP482	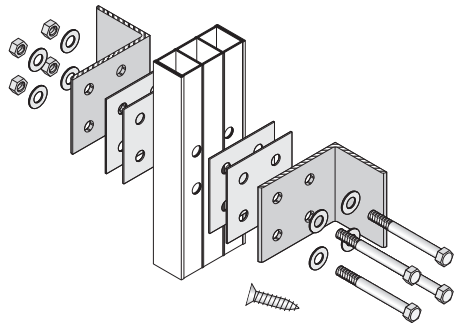 **Intermediate Mullion Anchor:** (1) SL462 Anchor Support (4) NY401 Slip Pads (4) MF545 5/8"-11 x 4-1/2" (114) GR5 Bolts (8) MF255 5/8" (16) Flat Washers (4) MF219 5/8"-11 Hex Nuts, NyLoc (1) ST277 #12 x 1" (25) FH SMS	12
AP971	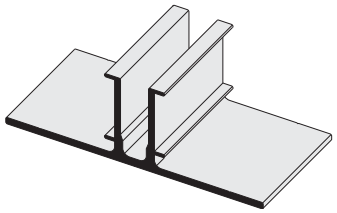 Top and Bottom Anchor for Intermediate Mullion	12
AP483	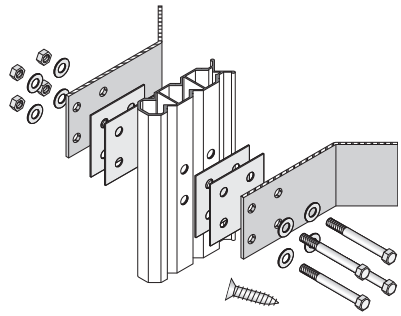 **Corner Mullion Anchor:** (1) SL492 Anchor Support (4) NY401 Slip Pads (4) MF545 5/8"-11 x 4-1/2" (114) GR5 Bolts (8) MF255 5/8" (16) Flat Washers (4) MF219 5/8"-11 Hex Nuts, NyLoc (1) ST277 #12 x 1" (25) FH SMS	6
AP492	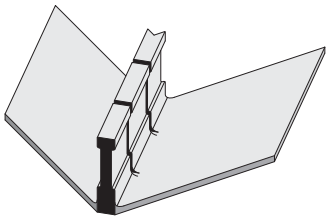 Top and Bottom Anchor for Corner Mullion	6

BLAST MITIGATION

Accessories

FOR 1" (25) GLAZING

Blast Resistant Curtain Wall
• Series BW3250

PART NO.	DETAIL	DESCRIPTION	PKG. QTY.
HD975	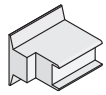	End Dam for Vertical Mullions	50
CP900	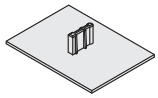	Closure Plate for Vertical Mullions	50
CW368	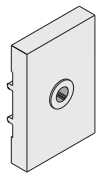	Temporary Glass Retainer for Mullions	50
NP430	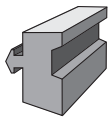	Exterior Gasket	250' Roll
SP250	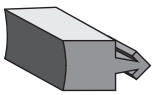	Interior Spacer Gasket	250' Roll
SB504	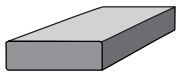	Setting Block for 1" (25) Glass; 4" (101.6) Long	100
MS222		Screw for Pressure Bar 1/4"-20 x 1" (25) HWHCS with SRG5	200
CP901	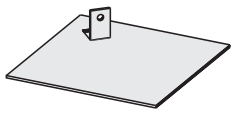	Closure Plate for Corner Vertical Mullions	10
SL461	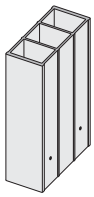	Splice Sleeve for Jamb and Intermediate Mullions	12
SL491	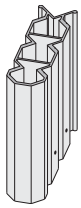	Splice Sleeve for Corner Mullions	6

BLAST MITIGATION

Table of Contents

Blast Resistant Concealed Vents
- Defender Series BR7500
- Defender Series BW7600

DEFENDER
BLAST MITIGATION PRODUCTS

SECTION N2 **PAGE**

SPECIFICATIONS .....02-N2 and 03-N2
SPECIAL FEATURES SERIES BR7500 .....04-N2
TYPICAL DETAILS SERIES BR7500 .....05-N2
SPECIAL FEATURES SERIES BW7600.....06-N2
TYPICAL DETAILS SERIES BW7600.....07-N2

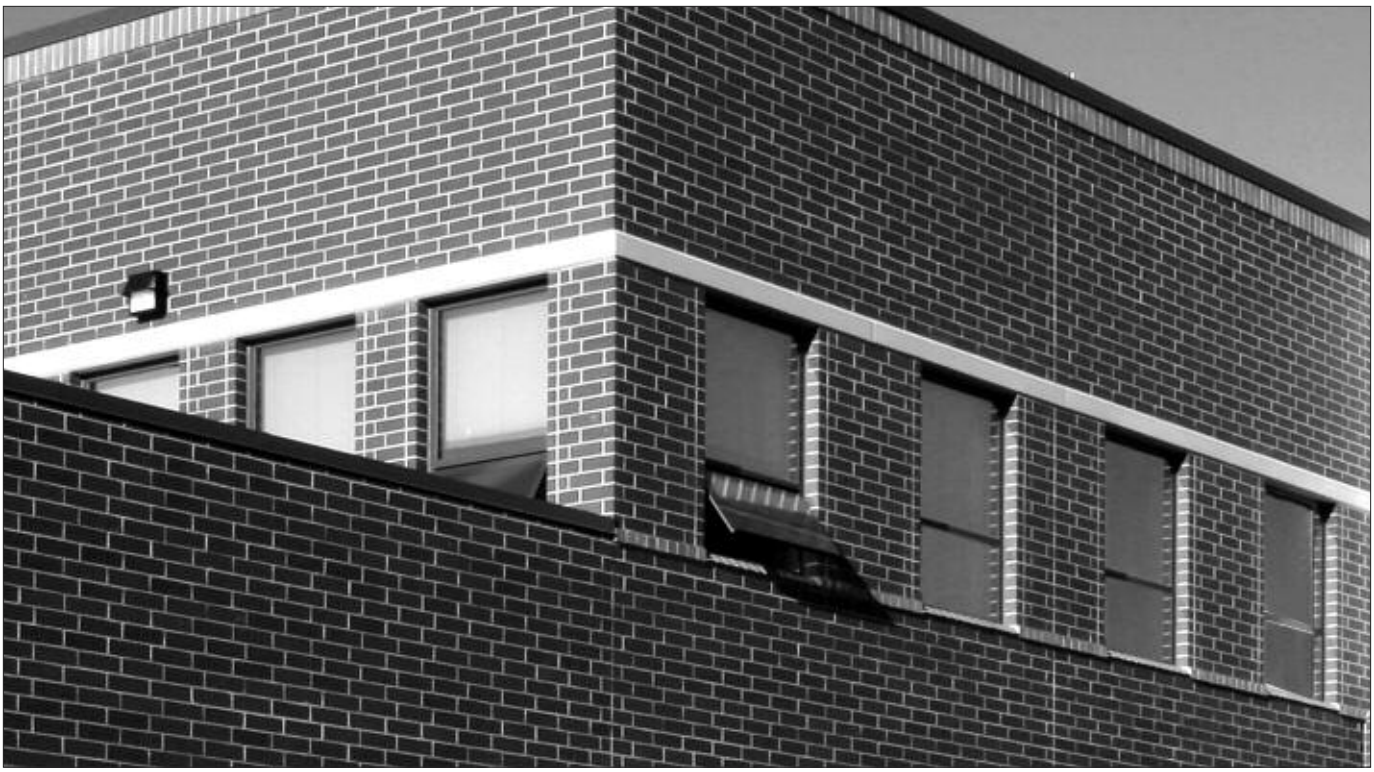

Project: National Guard Readiness Center, Spokane, WA

Due to the diversity in state/provincial, local, and federal laws and codes that govern the design and application of architectural products, it is the responsibility of the individual architect, owner, and installer to ensure that products selected for use on projects comply with all applicable building codes and laws. U.S. Aluminum exercises no control over the use or application of its products, glazing materials, and operating hardware, and assumes no responsibility thereof.

The rapidly changing technology within the architectural aluminum products industry demands that U.S. Aluminum reserve the right to revise, discontinue or change any product line, specification or electronic media without prior written notice.

NOTE: Dimensions in parentheses ( ) are millimeters unless otherwise noted.
Other metric units shown in this publication are:

m - meter	Kg - kilogram
Pa - pascal	KPa - kilopascal
MPa - megapascal	

BLAST MITIGATION

Specifications

Blast Resistant Concealed Vents
- Defender Series BR7500
- Defender Series BW7600

SECTION 08 51 13 ALUMINUM WINDOWS

Drawings and specifications are based on either Series BR7500 Blast Resistant Concealed Vent Thermal C-75 Window or Series BW7600 Blast Resistant Concealed Vent Thermal CW100 Window as manufactured by U.S. Aluminum. Whenever substitute products are to be considered, supporting technical literature, samples, drawings, and performance data must be submitted 10 days prior to bid in order to make a valid comparison of the products involved. Test reports certified by an AAMA independent test laboratory must be made available upon request.

PART 1 GENERAL

1.01 Work Included

A. Furnish and install aluminum architectural windows complete with hardware and related components as shown on drawings and specified in this section.

Specify glass and glazing in this section if window assemblies are to be glazed by the window manufacturer. If glazing is to be done by a different contractor, glass and glazing should be specified in Section 08 80 00.

B. 1-1/32" (26) Thick Glass
1. All units shall be factory glazed.

OR

1. Reference Section 08 80 00 for Glass and Glazing.

List work and materials related to this section but specified in other sections.

1.02 Related Work

Section 08 40 00 - Entrances and Storefronts
Section 08 44 00 - Glazed Curtain Walls
Section 08 50 00 - Windows

1.03 Testing and Performance Requirements

A. Test Units
1. Air, water, and structural test unit shall conform to requirements set forth in ANSI/AAMA/NWWDA 101 I.S. 2-97 and AAMA 910-93 or CSA A440.
2. Thermal test unit sizes shall be 36" x 60" (914 x 1524). Unit shall consist of a casement, fixed or projected window.

B. Test Procedures and Performances
1. **Standards:** Windows shall conform to all AAMA/ ANSI/NWWDA-101 I.S. 2-97 and AAMA 910-93 or CSA A440 requirements for the window type referenced in 1.01.B. In addition, the following specific performance requirements shall be met.
2. **Air Infiltration Test:** With ventilators closed and locked, test unit in accordance with ASTM E 283-91 at a static air pressure difference of 6.24 psf. Air infiltration shall not exceed .30 cfm per foot of crack.
3. **Water Resistance Test:** With ventilators closed and locked, test unit in accordance with ASTM E 331-96 /ASTM E 547 at a static air pressure difference of 12 psf. There shall be no uncontrolled water leakage.
4. **Uniform Load Deflection Test:** With ventilators closed and locked, test unit in accordance with ASTM E 330-97 at a static air pressure difference of 112.5 psf positive and negative pressure. No member shall deflect over L/175 of its span.
5. **Condensation Resistance Test (CRF):** With ventilators closed and locked, test unit in accordance with AAMA 1503. Condensation Resistance Factor (CRF) shall not be less than 49.
6. **Thermal Transmittance Test (Conductive U-Value):** With ventilators closed and locked, test unit in accordance with NFRC 100 and AAMA 1503. Conductive thermal transmittance (U-Value) shall have a range between 0.35 to 0.56 BTU/hr/ft^2/°F.
7. **AAMA C75 Rating Series BR7500- Testing Procedures:** AAMA/WDMA/CSA 101/I.S.2/ A440-0.8 - Laboratory Performance Testing.
   AAMA 502-08 - Newly Installed Fenestration Products.
   AAMA 511-08 - Installed Fenestration Products After 6 Months.
8. **AAMA CW100 Rating Series BW7600- Testing Procedures:** AAMA/WDMA/CSA 101/I.S.2/ A440-8 - Laboratory Performance Testing.
   AAMA 503-08 - Newly Installed Fenestration Products.
   AAMA 511-08 - Installed Fenestration Products After 6 Months.
9. DoD - UFC 4-010-01
   - ATFP
   - ISC Security Design Criteria for Blast Protection for Windows
   - ASTM F 1642
   - FAR 52.225-9, 11, and 12 Buy America Act

1.04 Quality Assurance

A. Provide test reports from AAMA accredited laboratories certifying the performance as specified in 1.05 or 11.15 of CSA A440.

B. Test reports shall be accompanied by the window manufacturer's letter of certification, stating the tested window meets or exceeds the referenced criteria for the appropriate AAMA/NWWDA 101/I.S.2-97 and AAMA 910-93 or CSA A440 window type.

1.05 Submittals

A. Contractor shall submit shop drawings, finish samples, test reports, and warranties.

BLAST MITIGATION

Specifications

Blast Resistant Concealed Vents
- Defender Series BR7500
- Defender Series BW7600

SECTION 08 51 13 ALUMINUM WINDOWS

1.06 Warranties

A. Total Window System
1. The responsible contractor shall assume full responsibility and warrant for one year the satisfactory performance of the total window installation which includes that of the windows, hardware, glass (including insulating units), glazing, anchorage and setting system, sealing, flashing, etc., as it relates to air, water, and structural adequacy as called for in the specifications and approved shop drawings.

PART 2 PRODUCTS

2.01 Materials

A. Aluminum
1. Extruded aluminum shall be 6063-T5 alloy and tempered.

B. Hardware
1. Series BR7500 - Locking handles shall be cam type as supplied by U.S. Aluminum.
2. Series BW7600 - Locking handles shall be Single Multi-Point as supplied by U.S. Aluminum.
3. Operating hardware shall be 4-bar stainless steel arms or equal.

C. Weatherstrip
1. All weatherstrip shall be E.P.D.M. or equal.

D. Thermal Barrier
1. Barrier material shall be poured-in-place two part polyurethane. To ensure that composite strength remains unaltered during thermal cycling, a mechanical bond between the aluminum and the thermal filling shall be created by mechanically abrading the extrusion thermal cavity prior to filling with the polyurethane polymer. A non-structural thermal barrier is unacceptable.
2. Specified hardware shall not bridge the thermal barrier.

E. Glass
1. Insulating glass shall be 1-1/32" (26) as manufactured by ( ) consisting of ( ) exterior, ( ) air spacer, and ( ) interior.

2.02 Fabrication

A. General
1. All primary aluminum frame and vent extrusions shall have a minimum wall thickness of .125 (3.2).
2. Mechanical fasteners, welded components, and hardware items shall not bridge thermal barriers. Thermal barriers shall align at all frame and vent corners.
3. Depth of frame shall be 3" (76.2) for 1-1/32" (26) glazing.

B. Frame
1. Frame components shall be mechanically fastened.

C. Ventilator
1. All vent extrusions shall be tubular.
2. Each corner shall be mitered, reinforced with an extruded corner key, and hydraulically crimped.
3. Each vent shall be pressure equalized utilizing two rows of E.P.D.M. weatherstripping (or equal) installed in dovetail grooves in the extrusion.
4. The vent shall present a flush appearance with the main frame when in the closed position.

D. Screens
1. Screen frames shall be extruded.
2. Screen mounting holes in the window frame shall be factory drilled.
3. Screen mesh shall be aluminum or fiberglass. (if applicable)

E. Glazing
1. All units shall be glazed with spacer and structural silicone.

F. Finish

All exposed framing surfaces shall be free of scratches and other serious blemishes. Aluminum extrusions shall be given a caustic etch followed by an anodic oxide treatment to obtain...
(Specify one of the following)
_____#11 Clear anodic coating
_____#22 Dark Bronze anodic coating
_____#33 Black anodic coating
A Fluoropolymer paint coating conforming with the requirements of AAMA 2605. Color shall be *(Specify a U.S. Aluminum standard color)*.

PART 3 EXECUTION

3.01 Inspection

A. Job Conditions
1. Verify that openings are dimensionally within allowable tolerances, plumb, level, clean, provide a solid anchoring surface, and are in accordance with approved shop drawings.

3.02 Installation

A. Use only skilled tradesmen with work done in accordance with approved shop drawings and specifications.
B. Adequately anchor to maintain positions permanently when subjected to normal thermal movement, specified building movement, and specified wind loads.
C. Adjust windows for proper operation after installation.
D. Furnish and apply sealants to provide a weather tight installation at all joints and intersections and at opening perimeters.

3.03 Protection and Cleaning

A. After completion of window installation, windows shall be inspected, adjusted, put into working order and left clean, free of labels, dirt, etc. Protection from this point shall be the responsibility of the general contractor.

BLAST MITIGATION

Special Features

FOR 1-1/32 (26) GLAZING

Blast Resistant Concealed Vent Window
• Defender Series BR7500

DEFENDER
BLAST MITIGATION PRODUCTS

The Series BR7500 Blast Resistant Concealed Vent is a minimal sightline window perfect for use in blast mitigation storefront and curtain wall openings. Standard hardware includes Stainless Steel 4-Bar Hinges and Cam Locking Handles. As with all of our operable windows, vent construction starts with tubular vent components that are mitered, reinforced with corner keys, and crimped at all corners. When closed, the vent is sealed to the frame with bulb gaskets, ensuring an airtight seal.

- C-75 Rated Project Out Window
- DoD UFC 4-010-01, ATFP, ISC Security Design Criteria for Blast Protection for Windows, ASTM F 1642
- Accepts 1-1/32" (26) Laminated Glazing
- Minimal Sightline
- Use With BR604, BR606 and BT601 Storefront or BW3250 Curtain Wall
- Structural Silicone Glazed
- Thermally Improved Design
- Reinforced Corner Construction
- Finishes Range From Clear, Bronze or Black Anodic Finishes to a Wide Selection of Custom Matched Painted Coatings
- Made in the U.S.A.

Blast Resistant Concealed Vent

BLAST MITIGATION

Typical Details

Blast Resistant Concealed Vent Window
• Defender Series BR7500

FOR 1-1/32 (26) GLAZING

Shown with Series BW3250 2-1/2" x 8" (63.5 x 203.2) Curtain Wall

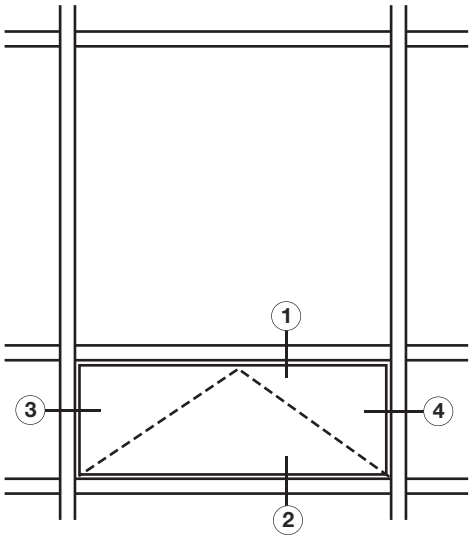

TYPICAL ELEVATION

Maximum Frame Size:
60"w x 32"h (1524 x 813).

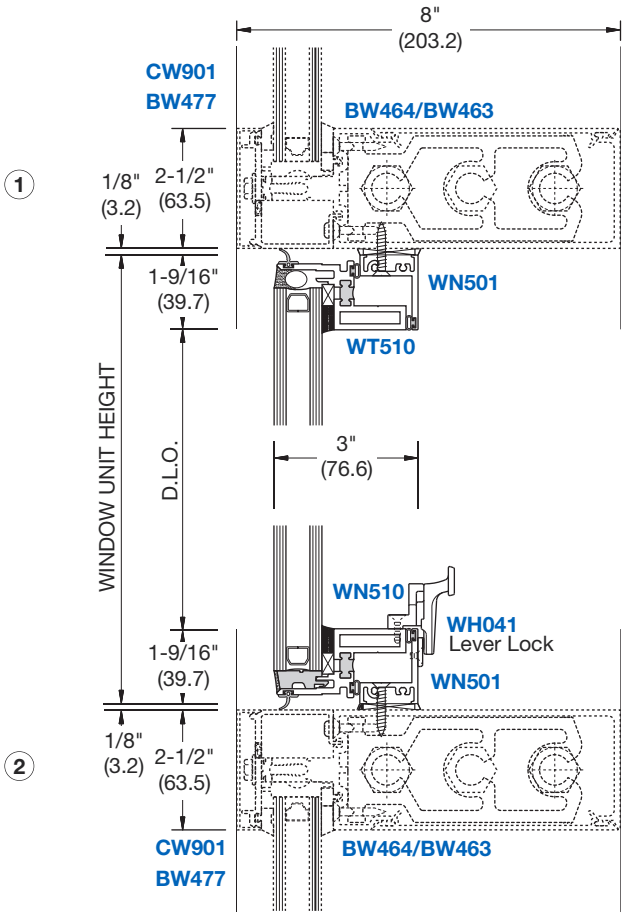

For complete details and installation instructions visit **usalum.com**

Meets or Exceeds Specifications:
- AAMA - C-75
- DoD - UFC 4-010-01
  - ATFP
  - ISC - Security Design Criteria for Blast Protection for Windows
  - ASTM F 1642
- AAMA/WDMA/CSA 101/1.S.2/A 440-08
  - ASTM E 283-04
  - ASTM E 330-02
  - ASTM E 331-00
  - AAMA 1503
- NFRC - NFRC 100-2004
  - NFRC 200-2004
  - NFRC 500-2004
- Buy America Act - FAR 52.225-9, 11 & 12

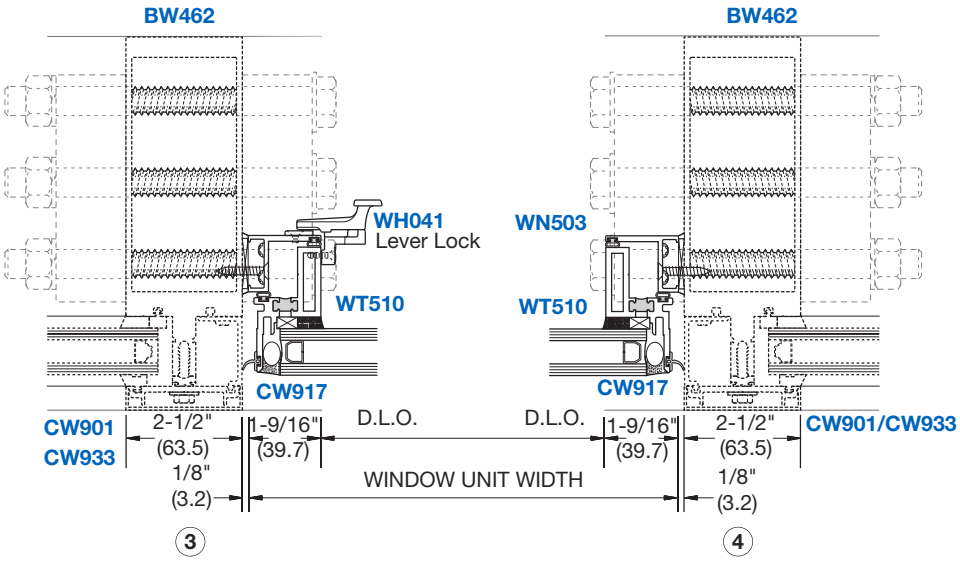

NOT TO SCALE

BLAST MITIGATION

Special Features

FOR 1-1/32" (26) GLAZING

Blast Resistant Concealed Vent Window

• Defender Series BW7600

DEFENDER
BLAST MITIGATION PRODUCTS

The Series BW7600 Blast Resistant Concealed Vent is a minimal sightline window offering a DoD 1 psi blast resistance capability. Standard hardware includes a single Multi-Point Locking Handle. As with all of our operable windows, vent construction starts with tubular vent components that are mitered, reinforced with corner keys, and crimped at all corners. When closed, the vent is sealed to the frame with bulb gaskets, ensuring an air tight seal.

- AAMA CW100-Rated
- DoD UFC 4-010-01, ATFP, ISC Security Design Criteria for Blast Protection for Windows, ASTM F 1642
- Accepts 1-1/32" (26) Laminated Glazing
- Minimal Sightline
- Structural Silicone Glazed
- Use With BR604, BR606, and BT601 Storefront or BW3250 Curtain Wall
- Reinforced Corner Construction
- Thermally Broken
- U-Factor 0.56 to 0.34
- Multi-Point Locking Handles
- Made in the U.S.A.

Blast Resistant
Concealed Vent

BLAST MITIGATION

Typical Details

Blast Resistant Concealed Vent Window
• Defender Series BW7600

FOR 1-1/32" (26) GLAZING

Series BW7600 Concealed Vent Window
With Series BW3250 Curtain Wall System

For specifications, details, and testing data go to **usalum.com**

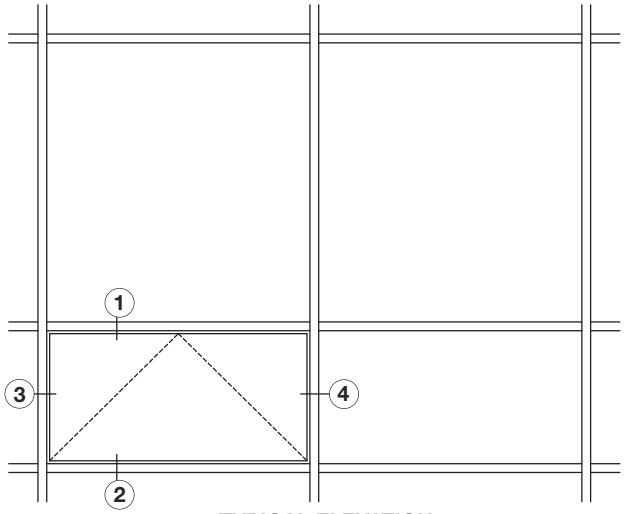

TYPICAL ELEVATION

Meets or Exceeds Specifications:
- AAMA - CW100
- DoD - UFC 4-010-01
  - ATFP
  - ISC - Security Design Criteria for Blast Protection for Windows
  - ASTM F 1642
- AAMA/WDMA/CSA 101/1.S.2/A 440-08
  - ASTM E 283-04
  - ASTM E 330-02
  - ASTM E 331-00
  - AAMA 1503
- NFRC - NFRC 100-2004
  - NFRC 200-2004
  - NFRC 500-2004
- Buy America Act - FAR 52.225-9, 11 & 12

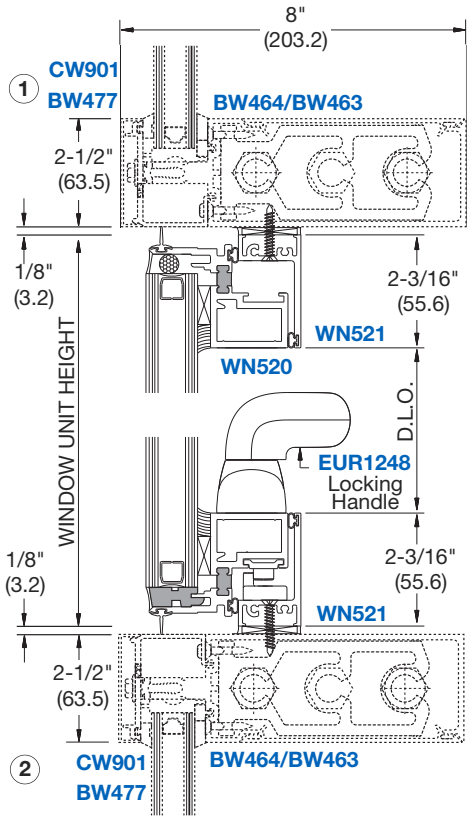

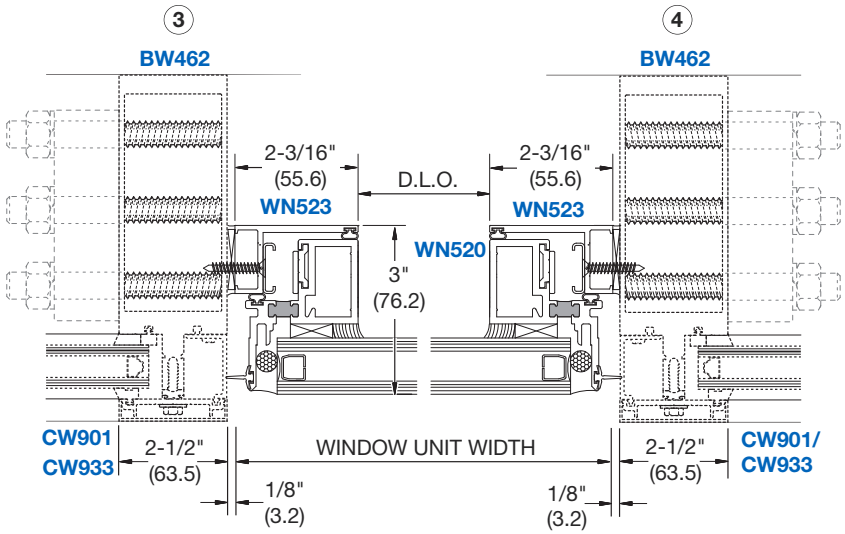

EURO MULTI-POINT LOCKING HANDLES

PART NO.	FINISH
EUR1248W	Powder Coat White
EUR1248BL	Powder Coat Black
EUR1248SN	Satin Nickel
EUR1248SC	Satin Chrome

NOT TO SCALE

BLAST MITIGATION

Table of Contents

Blast Resistant Single Hung, Fixed, and Sliding Windows

- Defender Series BW8000
- Defender Series BW8100
- Defender Series BW8200

DEFENDER
BLAST MITIGATION PRODUCTS

SECTION N3 **PAGE**

SPECIFICATIONS SERIES BW8000, BW8100, AND BW8200 WINDOWS ..... 02-N3 and 03-N3
SPECIAL FEATURES SERIES BW8000 SINGLE HUNG WINDOW 04-N3
TYPICAL DETAILS SERIES BW8000 SINGLE HUNG WINDOW 05-N3
SPECIAL FEATURES SERIES BW8100 FIXED WINDOW 06-N3
TYPICAL DETAILS SERIES BW8100 FIXED WINDOW 07-N3
SPECIAL FEATURES SERIES BW8200 HORIZONTAL SLIDING WINDOW 08-N3
TYPICAL DETAILS SERIES BW8200 HORIZONTAL SLIDING WINDOW 09-N3

Due to the diversity in state/provincial, local, and federal laws and codes that govern the design and application of architectural products, it is the responsibility of the individual architect, owner, and installer to ensure that products selected for use on projects comply with all applicable building codes and laws. U.S. Aluminum exercises no control over the use or application of its products, glazing materials, and operating hardware, and assumes no responsibility thereof.

The rapidly changing technology within the architectural aluminum products industry demands that U.S. Aluminum reserve the right to revise, discontinue or change any product line, specification or electronic media without prior written notice.

NOTE: Dimensions in parentheses ( ) are millimeters unless otherwise noted.
Other metric units shown in this publication are:

m - meter	Kg - kilogram
Pa - pascal	KPa - kilopascal
MPa - megapascal	

BLAST MITIGATION

Specifications

Blast Resistant Single Hung, Fixed, and Sliding Windows

- Defender Series BW8000
- Defender Series BW8100
- Defender Series BW8200

SECTION 08 51 13 ALUMINUM WINDOWS

QUALITY ASSURANCE

Drawings and specifications are based on Series BW8000 Single Hung, BW8100 Fixed, or BW8200 Horizontal Sliding *(Specify)* CW60 Blast Resistant Thermal Windows as manufactured by U.S. Aluminum. Whenever substitute products are to be considered, supporting technical literature, samples, drawings, and performance data must be submitted 10 days prior to bid in order to make a valid comparison of the products involved. Test reports certified by an AAMA independent test laboratory must be made available upon request.

PART 1 GENERAL

1.01 Work Included

A. Furnish and install aluminum architectural windows complete with hardware and related components as shown on drawings and specified in this section.

Specify glass and glazing in this section if window assemblies are to be glazed by the window manufacturer. If glazing is to be done by a different contractor, glass and glazing should be specified in Section 08 80 00.

B. 1-1/32" (26) Thick Glass and Glazing

1. All units shall be factory glazed.

OR

1. Reference Section 08 80 00 for Glass and Glazing.

List work and materials related to this section but specified in other sections.

1.02 Related Work

Section 08 40 00 - Entrances and Storefronts
Section 08 44 00 - Glazed Curtain Walls
Section 08 50 00 - Windows

1.03 Testing and Performance Requirements

A. Test Units

1. Air, water, and structural test unit shall conform to requirements set forth in ANSI/AAMA/NWWDA 101 I.S. 2-97 and AAMA 910-93 or CSA A440.
2. Thermal test unit sizes shall be 47-1/4" x 59" (1200 x 1500) for Series BW8000 and BW8100, 59" x 47-1/4" (1500 x 1200) for Series BW8200. Unit shall consist of a single hung, fixed or horizontal sliding window.

B. Test Procedures and Performances

1. **Standards:** Windows shall conform to all AAMA/ANSI/NWWDA-101 I.S. 2-97 and AAMA 910-93 or CSA A440 requirements for the window type referenced in 1.01.B. In addition, the following specific performance requirements shall be met.
2. **Air Infiltration Test:** With ventilators closed and locked, test unit in accordance with ASTM E 283-91 at a static air pressure difference of 6.24 psf. Air infiltration shall not exceed .30 cfm per foot of crack.
3. **Water Resistance Test:** With ventilators closed and locked, test unit in accordance with ASTM E 331-96/ASTM E 547 at a static air pressure difference of 12 psf. There shall be no uncontrolled water leakage.
4. **Uniform Load Deflection Test:** With ventilators closed and locked, test unit in accordance with ASTM E 330-97 at a static air pressure difference of 90 psf positive and negative pressure. No member shall deflect over L/175 of its span.
5. **Condensation Resistance Test (CRF):** With ventilators closed and locked, test unit in accordance with AAMA 1503. Condensation Resistance Factor (CRF) shall not be less than 49 for Series BW8100 and BW8200. Not less than 50 for Series BW8000.
6. **Thermal Transmittance Test (Conductive U-Value):** With ventilators closed and locked, test unit in accordance with NFRC 100 and AAMA 1503. Conductive thermal transmittance (U-Value) for Series BW8000 and BW8200 Windows shall have a range between 0.35 to 0.56 BTU/hr/ft^2/°F and Series BW8100 Windows shall have a range between 0.33 to 0.56 BTU/hr/ft^2/°F.
7. **AAMA CW60 Rating Testing Procedures:**
   - AAMA/WDMA/CSA 101/I.S.2/A440-0.8 - Laboratory Performance Testing.
   - AAMA 503-08 - Newly Installed Fenestration Products.
   - AAMA 511-08 - Installed Fenestration Products After 6 Months.
8. DoD - UFC 4-010-01
   - ATFP
   - ISC Security Design Criteria for Blast Protection for Windows
   - ASTM F 1642
   - FAR 52.225-9, 11, and 12 Buy America Act

1.04 Quality Assurance

A. Provide test reports from AAMA accredited laboratories certifying the performance as specified in 1.05 or 11.15 of CSA A440.

B. Test reports shall be accompanied by the window manufacturer's letter of certification, stating the tested window meets or exceeds the referenced criteria for the appropriate AAMA/NWWDA 101/I.S.2-97 and AAMA 910-93 or CSA A440 window type.

1.05 Submittals

A. Contractor shall submit shop drawings, finish samples, test reports, and warranties.

N

BLAST MITIGATION

Specifications

SECTION 08 51 13 ALUMINUM WINDOWS

Blast Resistant Single Hung, Fixed, and Sliding Windows

- **Defender Series BW8000**
- **Defender Series BW8100**
- **Defender Series BW8200**

1.06 Warranties

A. Total Window System

1. The responsible contractor shall assume full responsibility and warrant for one year the satisfactory performance of the total window installation which includes that of the windows, hardware, glass (including insulating units), glazing, anchorage and setting system, sealing, flashing, etc., as it relates to air, water, and structural adequacy as called for in the specifications and approved shop drawings.

PART 2 PRODUCTS

2.01 Materials

A. Aluminum

1. Extruded aluminum shall be 6063-T5 alloy and tempered.

B. Hardware

1. Series BW8000 and BW8200 Windows have spring loaded self-locking latches as supplied by U.S. Aluminum.

C. Weatherstrip

1. For Series BW8000 and BW8200 Windows weatherstrip shall be fin seal or equal. For Series BW8100 Windows all weatherstrip shall be E.P.D.M.

D. Thermal Barrier

1. Barrier material shall be poured-in-place two part polyurethane. To ensure that composite strength remains unaltered during thermal cycling, a mechanical bond between the aluminum and the thermal filling shall be created by mechanically abrading the extrusion thermal cavity prior to filling with the polyurethane polymer. A non-structural thermal barrier is unacceptable.
2. Specified hardware shall not bridge the thermal barrier.

E. Glass

1. Insulating glass shall be 1-1/32" (26) as manufactured by ( ) consisting of ( ) exterior, ( ) air spacer, and ( ) interior.

2.02 Fabrication

A. General

1. All primary aluminum frame, extrusions or vent extrusions shall have a minimum wall thickness of .062 (1.57)
2. Depth of frame 4-1/2" (114.3) for 1-1/32" (26) glazing.

B. Frame - Frame components shall be mechanically fastened.

C. Ventilator (Series BW8000 and BW8200)

1. All vent extrusions shall be notched.

D. Screens (Series BW8000 and BW8200)

1. Screen frames shall have springs locking the screen in place.
2. Screen mesh shall be aluminum or fiberglass. (if applicable)

E. Glazing - All units shall be either shop or field glazed.

F. Finish

All exposed framing surfaces shall be free of scratches and other serious blemishes. Aluminum extrusions shall be given a caustic etch followed by an anodic oxide treatment to obtain... *(Specify one of the following)*

_____#11 Clear anodic coating

_____#22 Dark Bronze anodic coating

_____#33 Black anodic coating

A Fluoropolymer paint coating conforming with the requirements of AAMA 2605. Color shall be *(Specify a U.S. Aluminum standard color)*.

PART 3 EXECUTION

3.01 Inspection

A. Job Conditions-

Verify that openings are dimensionally within allowable tolerances, plumb, level, clean, provide a solid anchoring surface, and are in accordance with approved shop drawings.

3.02 Installation

A. Use only skilled tradesmen with work done in accordance with approved shop drawings and specifications.

B. Adequately anchor to maintain positions permanently when subjected to normal thermal movement, specified building movement, and specified wind loads.

C. Adjust windows for proper operation after installation.

D. Furnish and apply sealants to provide a weather tight installation at all joints and intersections and at opening perimeters.

3.03 Protection and Cleaning

A. After completion of window installation, windows shall be inspected, adjusted, put into working order and left clean, free of labels, dirt, etc. Protection from this point shall be the responsibility of the general contractor.

BLAST MITIGTATION

Special Features

FOR 1-1/32" (26) GLAZING

Blast Resistant Single Hung Window

- **Defender Series BW8000**

As part of the 8000 Series of heavy commercial windows, the BW8000 Blast Resistant Single Hung Window offers a DoD 1 psi blast resistance capability to the product line. The 4-1/2" (114) deep frame is designed to match typical building conditions, including our entrances and storefronts. An efficient thermally insulated frame accepts 1-1/32" (26) glazing infills, with extruded pulls at the interlock and bottom rail. The window features a self-locking latch and Class 5 balances for ease of operation. Accessories such as mulling bars, subsills, and head and jamb channels are available.

- DoD UFC 4-010-01, ATFP, ISC Security Design Criteria for Blast Protection for Windows, ASTM F 1642
- Thermally Insulated - NFRC Certified
- 4-1/2" (114) Deep Frame
- Accepts 1-1/32" (26) Laminated Glazing
- Choice of Block or Fin Frame
- AAMA CW60 Rated Window
- Class 5 Balance for Ease of Operation
- Available in an Array of Architectural Coatings and Anodized Finishes
- Made in the U.S.A.

Blast Resistant
Single Hung Windows

BLAST MITIGATION

Typical Details

FOR 1-1/32" (26) GLAZING

Series BW8000 Single Hung Window
With Series BW3250 Curtain Wall System

Maximum Frame Size
54-7/8" x 90" (1394 x 2286)

A complete set of details in DWG format is available at **usalum.com**

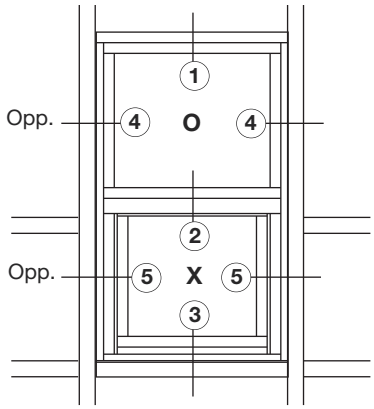

TYPICAL ELEVATION

Blast Resistant Single Hung Window
• Defender Series BW8000

Meets or Exceeds Specifications:

- AAMA - CW60
- DoD - UFC 4-010-01
  - ATFP
  - ISC - Security Design Criteria for Blast Protection for Windows
  - ASTM F 1642
- AAMA/WDMA/CSA 101/1.S.2/A 440-08
  - ASTM E 283-04
  - ASTM E 330-02
  - ASTM E 331-00
  - AAMA 1503
- NFRC - NFRC 100-2004
  - NFRC 200-2004
  - NFRC 500-2004
- Buy America Act - FAR 52.225-9, 11 & 12

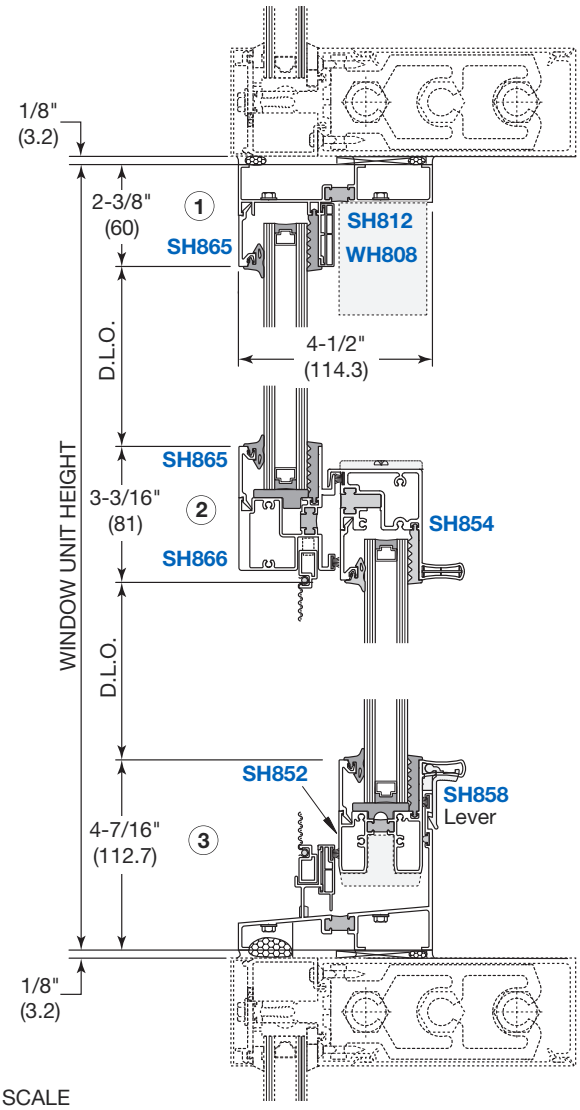

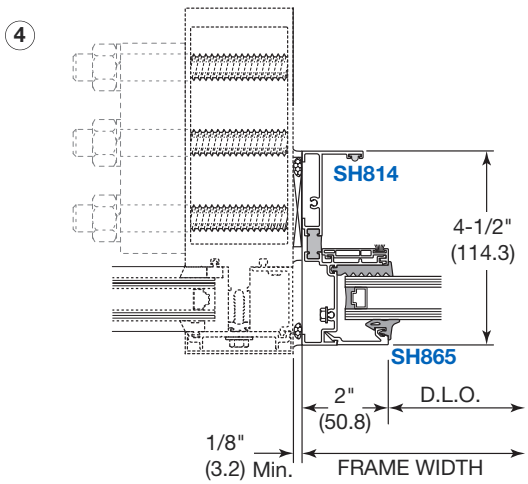

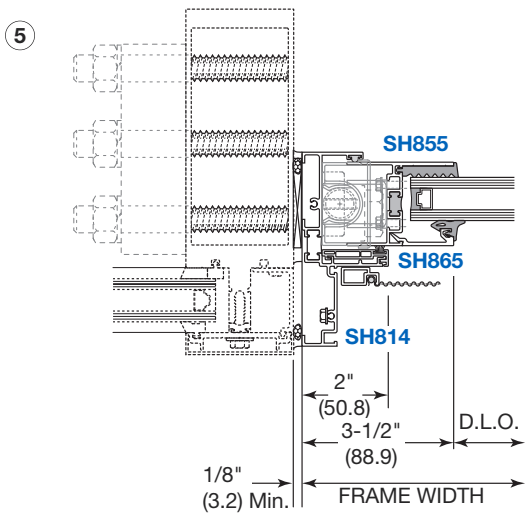

NOT TO SCALE

BLAST MITIGATION

Special Features

FOR 1-1/32" (26) GLAZING

Blast Resistant Fixed Window

- **Defender Series BW8100**

DEFENDER
BLAST MITIGATION PRODUCTS

The Series BW8100 Blast Resistant Fixed Window offers that rare combination of durability and toughness to meet blast mitigation requirements. The Defender Series of Blast Mitigation products are designed to provide protection for DoD and private sector facilities. Other Defender Series products include Storefront, Curtain Wall, Projected Windows, Horizontal Sliding, and Single Hung Windows.

- DoD UFC 4-010-01, ATFP, ISC Security Design Criteria for Blast Protection for Windows, ASTM F 1642
- Accepts 1-1/32" (26) Laminated Glazing
- Tested to AAMA CW60
- Thermally Insulated-NFRC Certified
- U-Factors as Low as 0.33
- 4-1/2" (114) Deep Frame to Match Typical Building Conditions
- Choice of Block or Fin Frame
- Accessories Such as Mulling Bars, Subsills, Head and Jamb Channels are Available
- Available in an Array of Architectural Coatings and Anodized Finishes
- Made in the U.S.A.

Blast Resistant Fixed Windows

BLAST MITIGATION

Typical Details

FOR 1-1/32" (26) GLAZING

Blast Resistant Fixed Window

- **Defender Series BW8100**

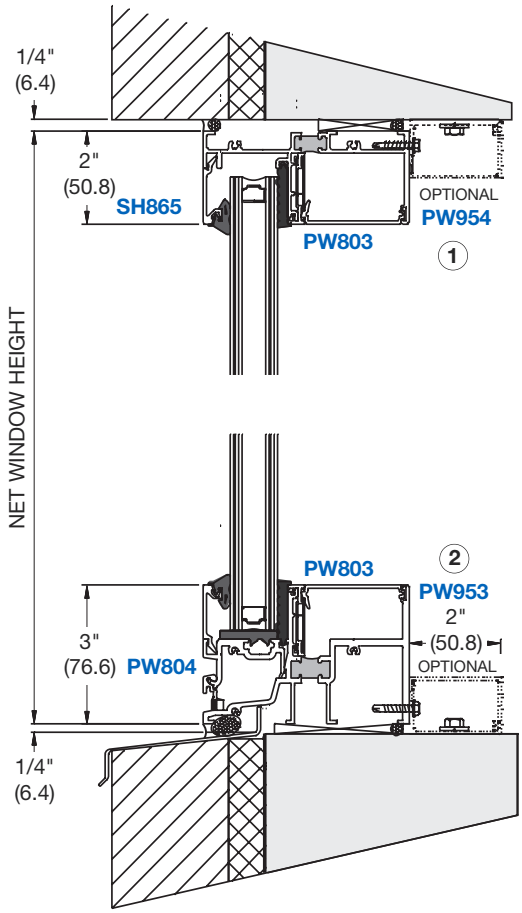

Block Frame
Installation Method Shown

Maximum Frame Size
60" x 90" (1524 x 2286)

A complete set of details in DWG format is available at **usalum.com**

Meets or Exceeds Specifications:

- AAMA -CW60
- DoD - UFC 4-010-01
  - ATFP
  - ISC - Security Design Criteria for Blast Protection for Windows
  - ASTM F 1642
- AAMA/WDMA/CSA 101/1.S.2/A 440-08
  - ASTM E 283-04
  - ASTM E 330-02
  - ASTM E 331-00
  - AAMA 1503
- NFRC - NFRC 100-2004
  - NFRC 200-2004
  - NFRC 500-2004
- Buy America Act - FAR 52.225-9, 11 & 12

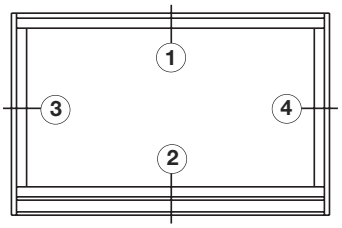

TYPICAL ELEVATION

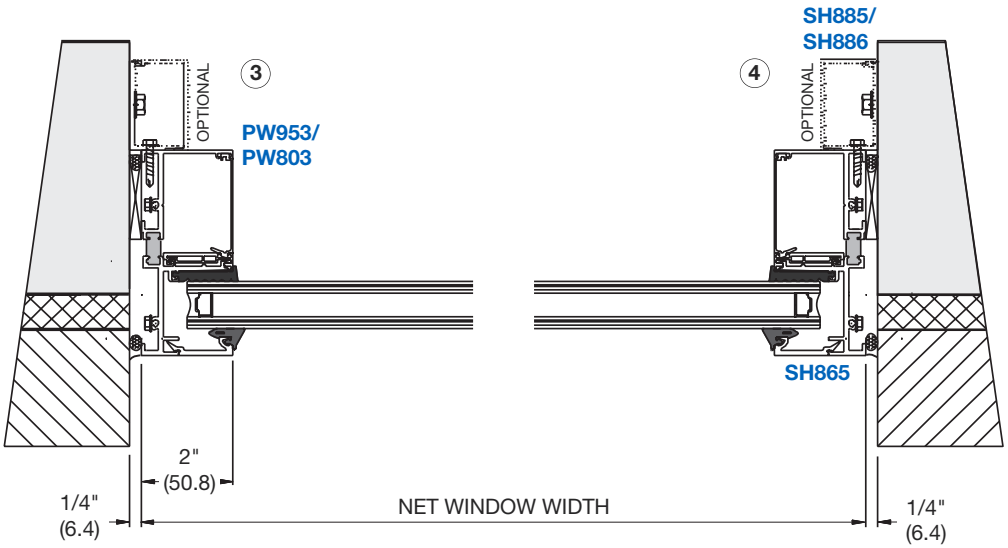

NOT TO SCALE

BLAST MITIGATION

Special Features

FOR 1-1/32" (26) GLAZING

Blast Resistant Horizontal Sliding Window

• Defender Series BW8200

DEFENDER
BLAST MITIGATION PRODUCTS

The BW8200 Blast Resistant Horizontal Sliding Window offers that rare combination of smooth operation, durability, and toughness to meet blast mitigation requirements. The Defender Series of Blast Mitigation products are designed to provide protection for DoD and private sector facilities. Other Defender Series products include Storefront, Curtain Wall, Projected, Fixed, and Single Hung Windows

- DoD UFC 4-010-01, ATFP, ISC Security Design Criteria for Blast Protection for Windows, ASTM F 1642
- Accepts 1-1/32" (26) Laminated Glazing
- Tested to AAMA CW60
- Thermally Insulated-NFRC Certified
- U-Factors as Low as 0.35
- 4-1/2" (114) Deep Frame to Match Typical Building Conditions
- Choice of Block or Fin Frame
- Even Sightlines
- Self Locking Latch and Adjustable Tandem Rollers for Ease of Operation
- Accessories Such as Screens, Mulling Bars, Subsills, Head and Jamb Channels are Available
- Available in an Array of Architectural Coatings and Anodized Finishes
- Complemented by the Series BW8000 Single Hung and Series BW8100 Fixed Windows
- Made in the U.S.A.

Blast Resistant Horizontal Sliding Windows

BLAST MITIGATION

Typical Details

Blast Resistant Horizontal Sliding Window
• Defender Series BW8200

FOR 1-1/32" (26) GLAZING

Series BW8200 Horizontal Sliding Window
With Series BW3250 Curtain Wall System

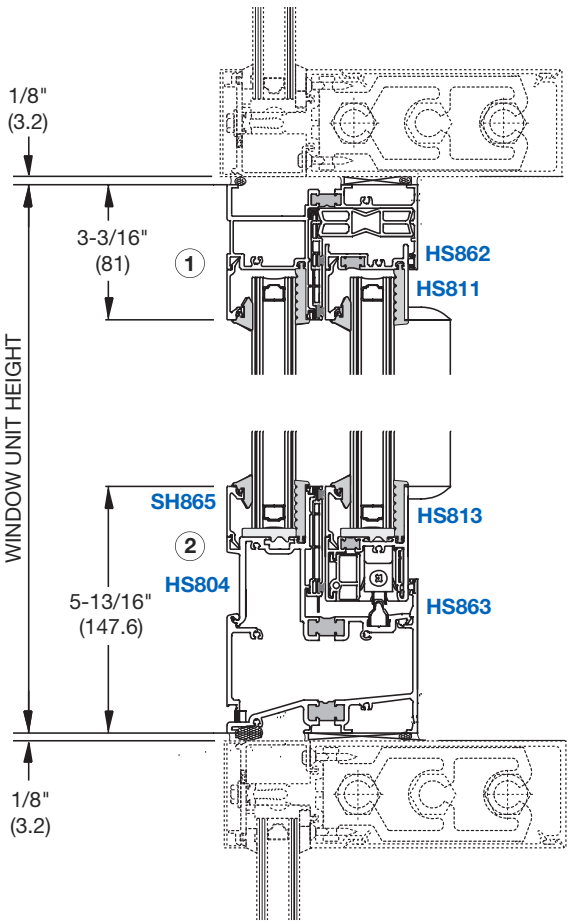

Maximum Frame Size
71" x 51" (1203 x 1295)

A complete set of details in DWG format is available at **usalum.com**

Meets or Exceeds Specifications:

- AAMA - CW60
- DoD - UFC 4-010-01
  - ATFP
  - ISC - Security Design Criteria for Blast Protection for Windows
  - ASTM F 1642
- AAMA/WDMA/CSA 101/1.S.2/A 440-08
  - ASTM E 283-04
  - ASTM E 330-02
  - ASTM E 331-00
  - AAMA 1503
- NFRC - NFRC 100-2004
  - NFRC 200-2004
  - NFRC 500-2004
- Buy America Act - FAR 52.225-9, 11 & 12

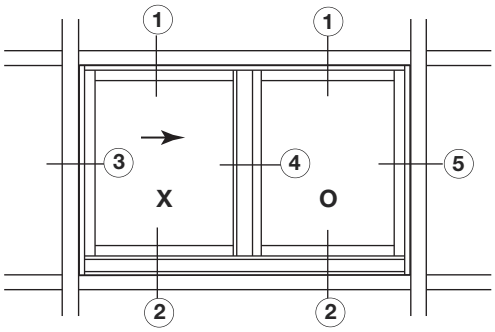

TYPICAL ELEVATION
(XO Shown, OX Opposite)

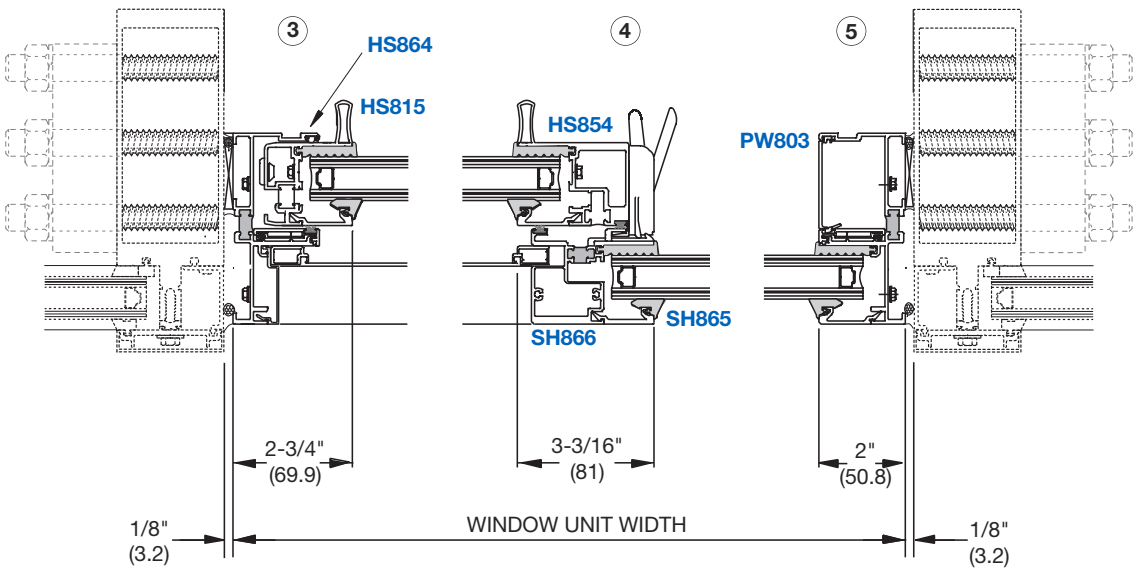

P

ARCHITECTURAL SYSTEMS

- 'All-Glass' Door Systems
- Heavy Glass Sliding Door Systems
- SPS Stacking Partition System
- Interior Office Partition Systems
- Architectural Railing Systems
- Architectural Metals
- Guarda™ Security Screens
- Columbia Screen Doors
- Frameless Shower Hardware
- Glazing Tools
- Glossary of Common Terms

Toll Free Phone Service
(800) 262-5151
Ext. 5305

Toll Free Fax Service
(866) 262-3299
U.S. and Canada

CRL®
U.S. ALUMINUM

usalum.com

P ARCHITECTURAL SYSTEMS

CRL U.S. ALUMINUM

Orange County Performing Arts Center
Costa Mesa, CA

C.R. Laurence Company continues to offer the glazing industry innovative, high quality products as it has for over 40 years.

In the following pages you will find an extensive selection of architectural hardware for the construction of beautiful 'all-glass' storefronts and entrances, beginning with our patented Wedge-Lock™ Door Rails and our impressive line of Blumcraft Hardware. We have also included our newest product lines, the CRL Stacking Partition System, Interior Office Partition System, Sliding Glass Door Systems, Laguna Series 'All-Glass' Door Hardware, Patch Hardware, Railing Systems, Architectural Metal, our new line of Guarda™ Protective Security Screens, Frameless Shower Hardware, and some of our popular glazing and installation tools.

CRL supports our extensive product lines with a Technical Sales Department through our web site at **crlaurence.com**. From the home page click on Contact Us, and then click on Technical Sales for Commercial Products. It's that easy!

For a complete Glossary of Common Terms see pages 62-P1 thru 68-P1.

SYSTEM — PAGES

- 'All-Glass' Door Systems ..... 02-P1 thru 19-P1
- Heavy Glass Sliding Door Systems ..... 20-P1 thru 31-P1
- SPS Stacking Partition System ..... 32-P1 thru 35-P1
- Interior Office Partition Systems ..... 36-P1 thru 39-P1
- Architectural Railing Systems ..... 40-P1 and 41-P1
- Architectural Metals ..... 42-P1 and 43-P1
- Guarda™ Protective Security Screens ..... 44-P1 thru 48-P1
- Columbia Screen Doors 49-P1
- Frameless Shower Hardware ..... 50-P1 and 51-P1
- Glazing Tools ..... 52-P1 thru 61-P1
- Glossary of Common Terms ..... 62-P1 thru 68-P1
- Thermal Break Technology 69-P1

For information or other assistance about C.R. Laurence Architectural Products, use our toll free phone or fax service numbers from anywhere in the U.S. or Canada

Toll Free Phone (800) 421-6144 Ext. 5305 Toll Free Fax (800) 262-3299

Contact CRL through our web site at crlaurence.com

ARCHITECTURAL WEB SITE

CRL PRESENTS THE NEW HOME FOR ARCHITECTS, DESIGNERS, AND SPECIFIERS

INTRODUCING CRL-ARCH.com

CRL-ARCH.com is the online reference for CRL Architectural Systems, designed with the architect, designer, specifier, and contractor in mind. Here you will find instant access to CAD Drawings, CSI Format Specifications, Engineering Reports, LEED® Statements, BIM Models, Project Galleries, and our extensive catalog library.

In addition to our array of online tools, all of our products are backed by a team of project managers, engineers, estimators, designers, and specialists, ready to help you with your project needs.

C.R. Laurence is the leading manufacturer of Architectural Railings, "All-Glass" Entrance Hardware, Storefronts, Exit Devices, Commercial Doors, Custom Cladding, Balanced Doors, Curtain Walls, Sunshades, and Frameless Shower Door Hardware. **CRL-ARCH.com** is the new home for CRL Architectural Products, including the family of dependable brands you've come to trust: C.R. Laurence, U.S. Aluminum, Blumcraft, Jackson, and Tajima.

Easy to find specifications, cad files, LEED® information, project galleries, catalogs, and much more!

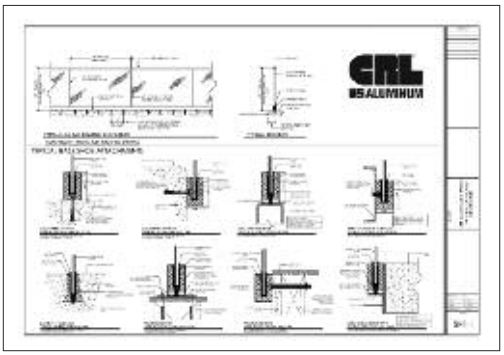

Cad Files in both dwg and pdf formats.

Specifications in both doc and pdf formats.

Online usalum.com By Phone (800) 262-5151 Ext. 7700
Online crlaurence.com By Phone (800) 421-6144 Ext. 7700

'ALL-GLASS' SYSTEMS

CRL Architectural Products

- **Enhancing the World Through the Beauty of Glass**
- **Innovative Award Winning Systems for Commercial and Residential Environments**

The CRL63A Architectural Hardware Master Catalog features more than 500 full-color pages containing the most comprehensive line of heavy glass hardware we've ever offered, including an extensive A-Z Product Index for quick look-up of products. The CRL63A is available for viewing, download or order through the Catalog Library at **crlaurence.com**.

GLASS ENTRANCE SYSTEM HARDWARE DRS DOOR RAIL SYSTEM

- **Exclusive CRL Wedge-Lock™ Glass Securing System for Rapid Installation and Steadfast Holding Power**
- **Door Assembly Can Be Ready for Installation in Less Than 10 Minutes**
- **Universal Top and Bottom Rails Cut Inventory and Make Ordering Easier**
- **Dry Glazing Allows for Field Replacement**
- **Kwik-Adjust™ Pivot Alignment System Allows Jamb Alignment Without Removing the Door**
- **Internal Components Do Not Require Removal Before Installation**
- **Rigid Single Component Housing Will Not Shift or Fall Out of Adjustment**
- **Glass Securing Pads are Designed for Longevity in Extreme Environments**

10", 6", and 4" Square 4" Tapered 2-5/16" Low Profile

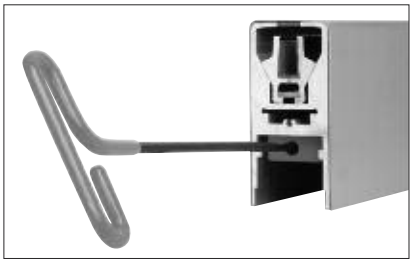

U.S. Patents 6,434,905 and 6,912,818 B2.
Foreign Patents Pending.

HOW THE WEDGE-LOCK™ GLASS SECURING SYSTEM WORKS

The patented Wedge-Lock™ Glass Securing System is a totally original concept for securing the glass in the Door Rail. No more fumbling with multiple pieces, trying to align them properly. No more time wasted waiting for cement to dry, or in clean up.

The Wedge-Lock™ System works by applying pressure evenly along both sides of the glass. Simply tighten the jaw screws, accessed from the hardware pocket of the rail. The screws then draw down a flat stainless steel bar. The steel bar in turn pulls down the gripping jaws. This action then forces the jaws towards one another, creating a tremendous amount of force against the glass, holding it securely in place.

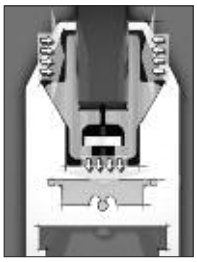

The Wedge-Lock™ Glass Securing System is so unique that it is covered by U.S. Patents 6,434,905 and 6,912,818 B2. Foreign Patents Pending.

- **Six Standard Finishes Plus Custom Finishes on Special Order**

Black Powder Coat | Polished Brass | Brushed Stainless | Polished Stainless | Black Bronze Anodized | Satin Anodized

Online usalum.com By Phone (800) 262-5151 Ext. 7700
Online crlaurence.com By Phone (800) 421-6144 Ext. 7700

'ALL-GLASS' SYSTEMS

CRL Glass Entrance System Hardware

CRL PATCH DOOR RAILS

- Patented Wedge-Lock™ Glass Securing System
- Adjust and Align Doors Without Removal
- Available With or Without Locks
- Six Standard Architectural Finishes, With Custom Finishes Available
- Ready-to-Ship Models From CRL Inventory
- Matching Sidelite Rails

8" (203) Low Profile | 9-1/2" (241) Tapered and Square | 12" (305) Tapered and Square

CRL SLENDER PROFILE DOOR RAILS

- Dry Glaze Slender Profile Door Rails Are Only 1" (25) Wide
- For Use With 1/2" (12) Tempered Glass
- Available in Three Heights With or Without a Lock
- Brushed or Polished Stainless Steel Finishes
- Custom 1" (25) Slender Profile Vertical Stiles Available on Special Order

USE MONOLITHIC TEMPERED GLASS

MANUFACTURED IN THE USA BY C.R. LAURENCE
An ISO9001:2008 Certified Company

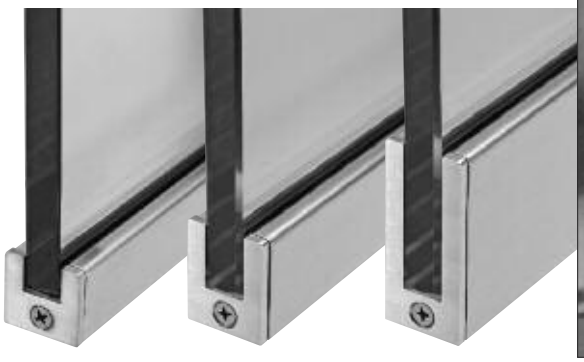

SP25 | SP35 | SP64

CRL WET GLAZED DOOR RAILS

- Three Popular Designs Available in Six Architectural Finishes
- Stock and Custom Sizes Available
- Available Matching Sidelite Rails
- Complete Door Kits Featuring These Rails Are Also Available

CR150 | CR350 | CR387

ACCESSORIES

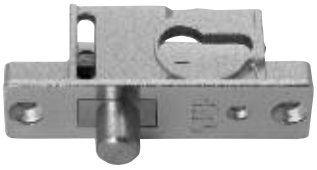

Locks

Keepers

'ALL-GLASS' SYSTEMS

CRL Door Rails

USE MONOLITHIC TEMPERED GLASS

Black Powder Coat | Polished Brass | Brushed Stainless | Polished Stainless | Black Bronze Anodized | Satin Anodized

- **Unmatched Selection of Square or Tapered Models**
- **Six Standard Finishes Plus Optional Custom Finishes**

We offer the most comprehensive Door and Sidelite Rail program in the industry. We stock 2-5/16", 4", 6", and 10" tall Door and Sidelite Rails in six standard architectural finishes, and offer a large variety of powder-coated options as well as custom finishing. Our Door Rails are prepped to accept most all of the standard hardware on the market today, but we don't stop there. We also offer custom fabrication to handle the rest, and we do it faster than any of our competitors.

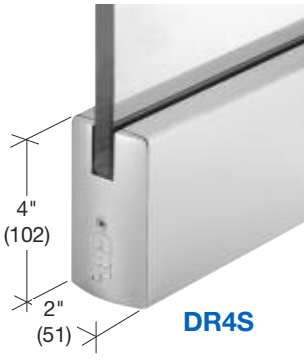

DR4S

4" Square Shape
Full Length Door Rails
for 3/8" (10) or
1/2" (12) Glass

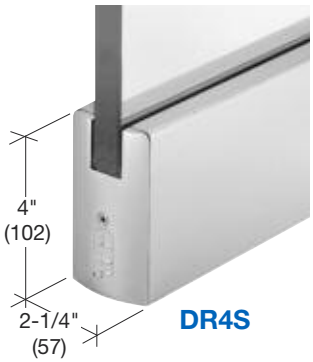

DR4S

4" Square Shape
Full Length Door Rails
for 5/8" (16) or
3/4" (19) Glass

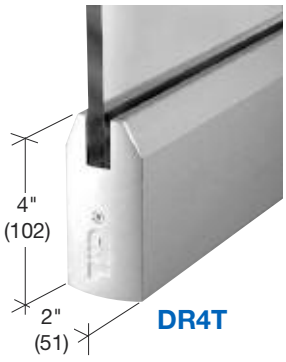

DR4T

4" Tapered Shape
Full Length Door Rails
for 3/8" (10) or
1/2" (12) Glass

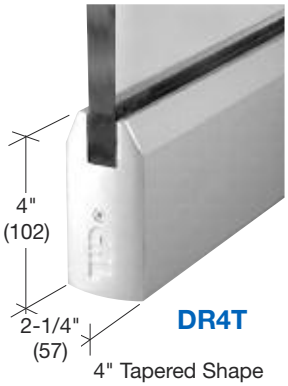

DR4T

4" Tapered Shape
Full Length Door Rails
for 5/8" (16) or
3/4" (19) Glass

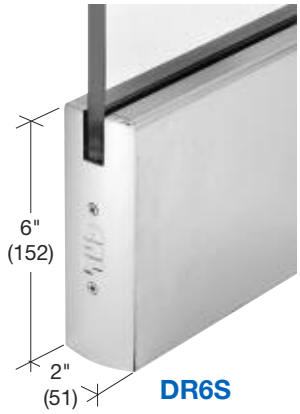

DR6S

6" Square Shape
Full Length Door Rails
for 3/8" (10) or
1/2" (12) Glass

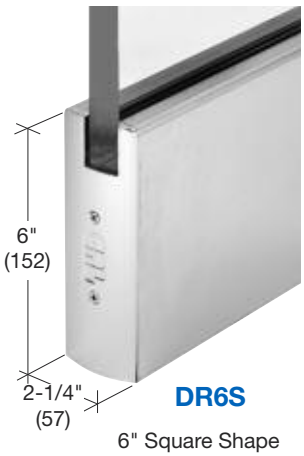

DR6S

6" Square Shape
Full Length Door Rails
for 5/8" (16) or
3/4" (19) Glass

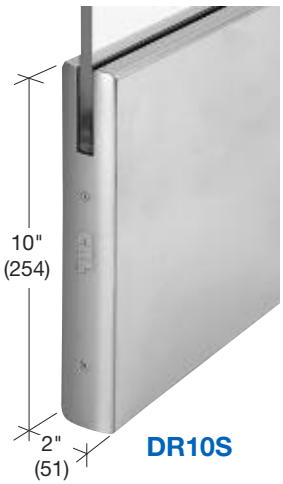

DR10S

10" Square Shape
Full Length Door Rails
for 3/8" (10) or
1/2" (12) Glass

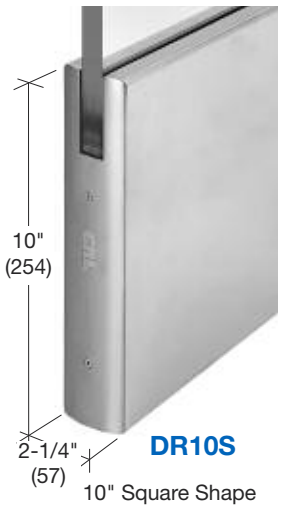

DR10S

10" Square Shape
Full Length Door Rails
for 5/8" (16) or
3/4" (19) Glass

'ALL-GLASS' SYSTEMS

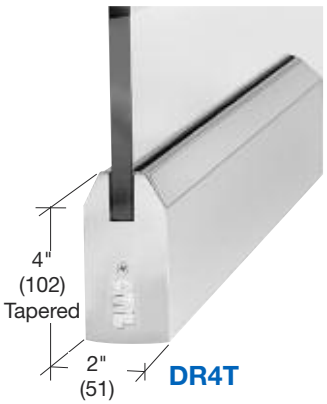

9-1/2" Patch Door Rails
for 3/8" (10) or
1/2" (12) Glass

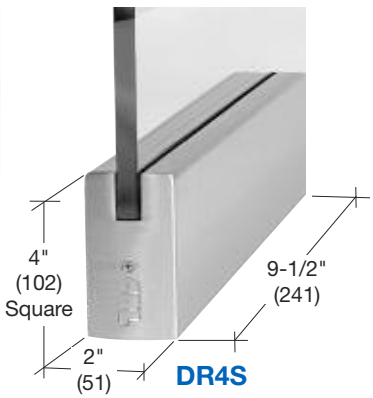

9-1/2" Patch Door Rails
for 3/8" (10) or
1/2" (12) Glass

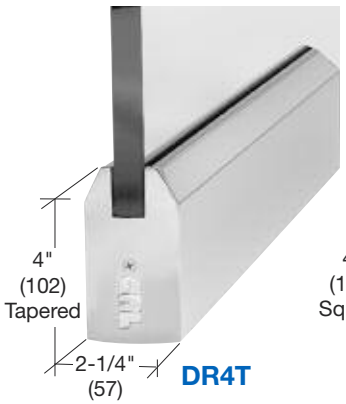

12" Patch Door Rails
for 5/8" (16) or
3/4" (19) Glass

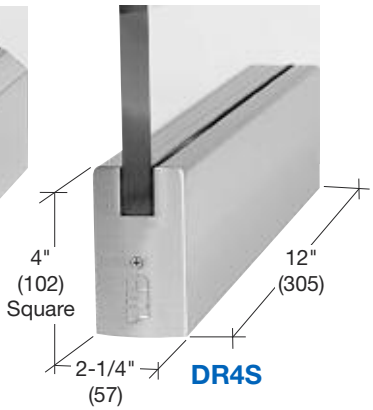

12" Patch Door Rails
for 5/8" (16) or
3/4" (19) Glass

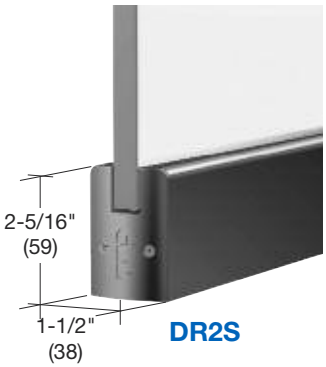

Low Profile Door Rails
for 1/2" (12) Glass

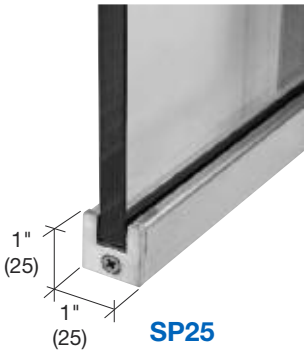

Slender Profile Door Rails
for 1/2" (12) Glass

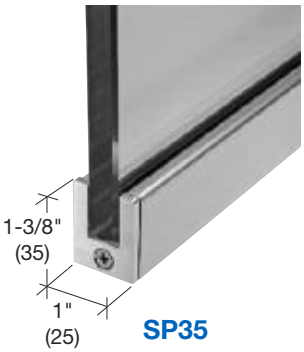

Slender Profile Door Rails
for 1/2" (12) Glass

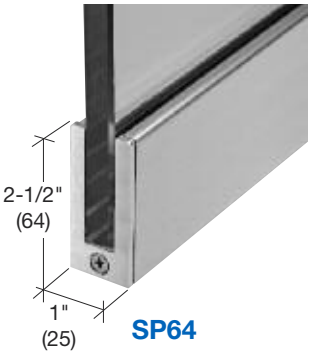

Slender Profile Door Rails
for 1/2" (12) Glass

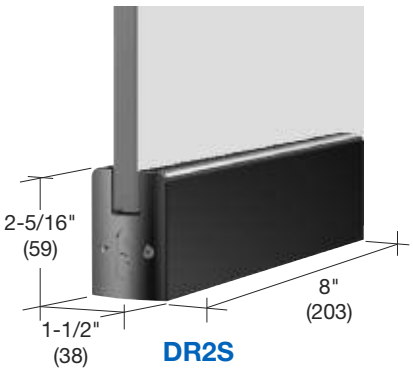

Low Profile Patch Door Rails
8" (203) Length
for 1/2" (12) Glass

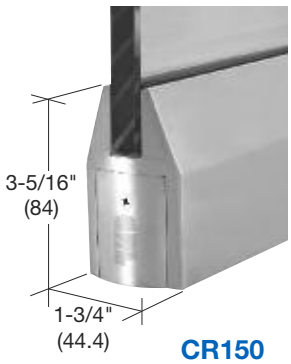

3-5/16" Tapered Wet
Glazed Door Rails
for 3/8" (10) to
1/2" (12) Glass

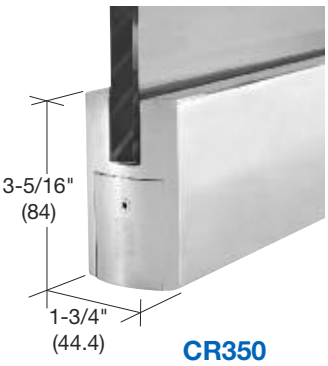

3-5/16" Square Wet
Glazed Door Rails
for 3/8" (10) to
1/2" (12) Glass

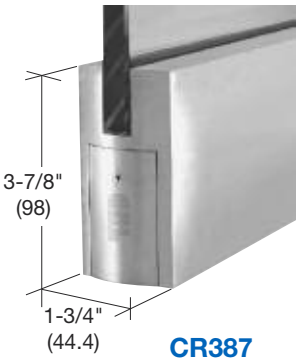

3-7/8" Square Wet
Glazed Door Rails
for 3/8" (10) to
1/2" (12) Glass

'ALL-GLASS' SYSTEMS

CRL Dry Glazed Frameless Glass Door Kits

- **Door Only or Complete Entrance Kits Available**
- **3'-0" Single Door or 6'-0" Double Door Kits for Use With 1/2" (12) Tempered Glass**
- **Brushed or Polished Stainless Steel, Clear or Black/Bronze Anodized Finishes**

CRL now offers Dry Glazed Frameless Glass Door Kits for single or double door entrances in Door Only or Complete Entrance Kits. All you supply is the 1/2" (12) tempered glass.

All Kits utilize our patented Dry Glaze Rails, and are available in 'P' or 'BP' style door types in brushed or polished stainless steel, clear or black/bronze anodized finishes. They all work with 1/2" (12) clear fully tempered glass, and require only two 5/8" (16) holes 12" (305) on center for the Pull Handle. Net door width is 35-3/4" (908).

Door Only Kits include Rails, Jackson Overhead Concealed Door Closer with Bottom Pivot, and a Pull Handle. Complete Entrance Kits also include a 1-3/4" x 4" (45 x 102) Header prepped for a Jackson Overhead Concealed Door Closer. All Kits are also available with Locks in the Bottom Rails.

Series DR4S
Wedge-Lock™
Dry Glaze Rail

USE MONOLITHIC TEMPERED GLASS

P-Style Kits With Full Width Rails Top and Bottom

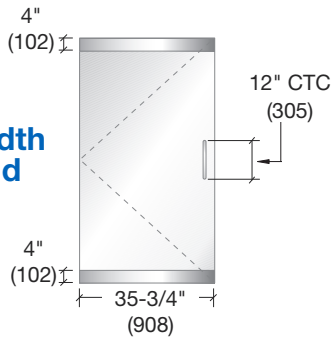

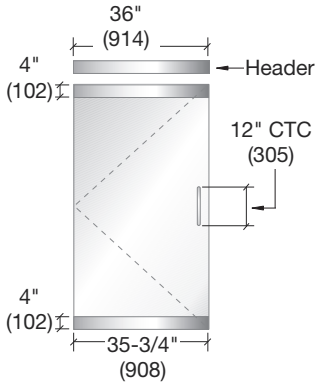

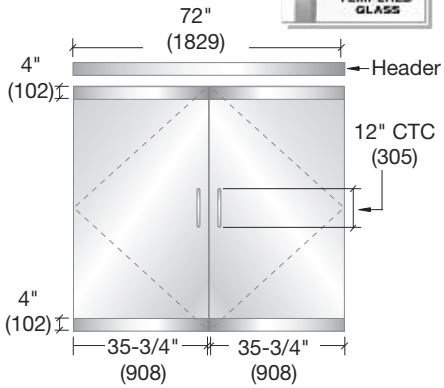

BP-Style Kits With Top Patch Rail and Full Bottom Rail

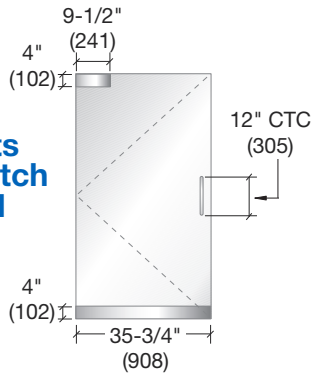

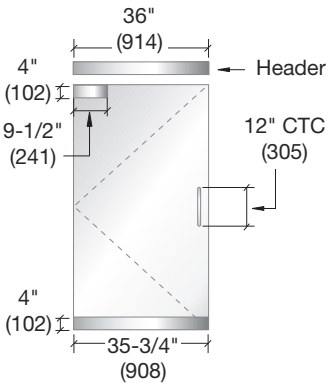

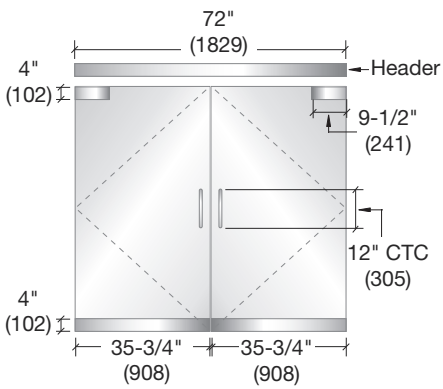

'ALL-GLASS' SYSTEMS

CRL Wet Glazed Frameless Glass Door Kits

- **Door Only or Complete Entrance Kits**
- **3'-0" Single Door or 6'-0" Double Door Kits for Use With 3/8" to 1/2" (10 to 12) Tempered Glass**
- **Brushed or Polished Stainless Steel, Clear or Black/Bronze Anodized Finishes**

CRL now stocks Wet Glazed Frameless Glass Door Kits for single or double door entrances in Door Only or Complete Entrance Kits. All you supply is the 3/8" to 1/2" (10 to 12) tempered glass.

All Kits utilize our Series CR350 Wet Glaze Rails, and are available in 'P' or 'BP' style door types in brushed or polished stainless steel, clear or black/bronze anodized finishes. They all work with 3/8" to 1/2" (10 to 12) fully tempered glass, and require only two 5/8" (16) holes 12" (305) on center for the Pull Handle. Net door width is 35-3/4" (908).

Door Only Kits include Rails, Jackson Overhead Concealed Door Closer with Bottom Pivot, and a Pull Handle. Complete Entrance Kits also include a 1-3/4" x 4" (45 x 102) Header prepped for a Jackson Overhead Concealed Door Closer. All Kits are also available with Locks in the Bottom Rails.

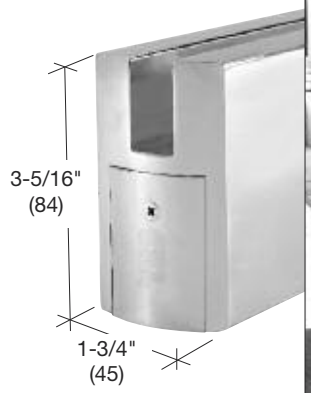

Series CR350
Wet Glaze Rail

USE MONOLITHIC TEMPERED GLASS

P-Style Kits With Full Width Rails Top and Bottom

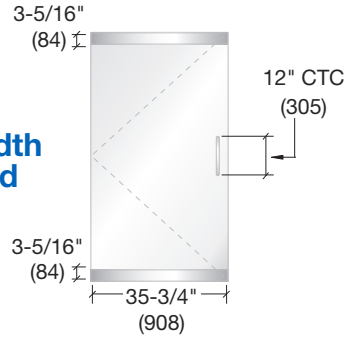

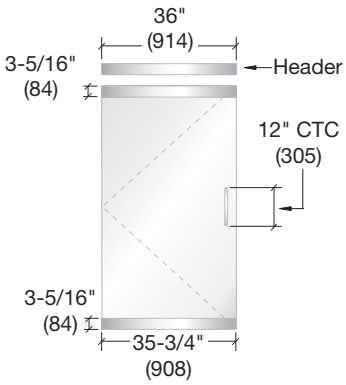

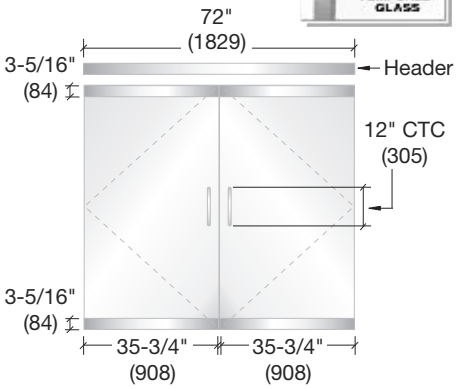

BP-Style Kits With Top Patch Rail and Full Bottom Rail

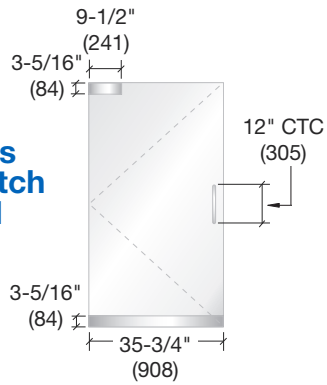

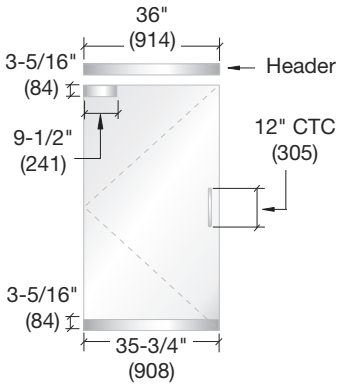

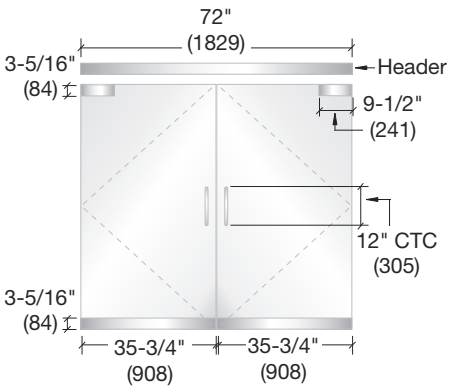

'ALL-GLASS' SYSTEMS

CRL Sidelite Rails and U-Channel

- Five Styles in Up to 11 Architectural Finishes
- Sidelite Rails Match Our Door Rails for Even Sightline

CRL SIDELITE RAILS WITH TOP LOAD ROLL-IN GASKET

10" Square 6" Square 4" Square 4" Tapered 2-5/16" Low Profile

CRL COMBINATION WIDE U-CHANNEL AND NARROW HEADER

- Available in Stock Lengths, Fabricated Headers, or Headers With Side Pockets for "Lift and Drop" Panel Glazing
- Matches the Width of Our Door and Sidelite Rails
- Accepts Roll-In Gasket, Top Pivot Block, and Flush Snap-In Insert
- Accepts 3/8", 1/2", 5/8", and 3/4" (10 to 19) Glass
- 11 Architectural Finishes
- Custom Sizes and Finishes Available

Combination Wide U-Channel and Narrow Header

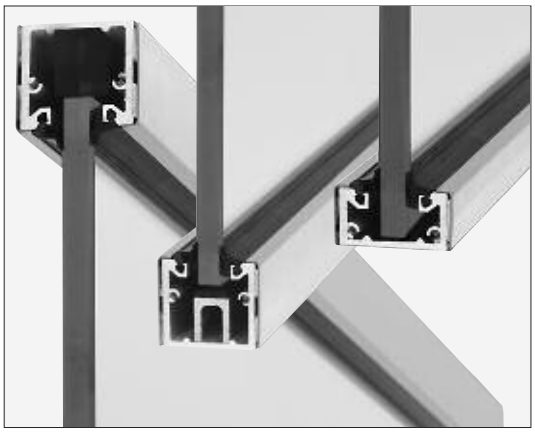

Regular U-Channel with Aluminum/Neoprene Setting Block

Shallow U-Channel

CRL REGULAR AND SHALLOW U-CHANNELS WITH TOP LOAD ROLL-IN GASKET

- Accepts 3/8" (10) or 1/2" (12) Glass
- Both Depths Available in Six Standard Architectural Finishes

CRL WET/DRY GLAZE U-CHANNELS

- Accepts 3/8" (10) or 1/2" (12) Glass
- Offered in Three Standard Heights
- 120" (3.05 m) and 240" (6.1 m) Stock Lengths Available in Six Finishes
- Custom Finishes Available

Wet Glaze U-Channel

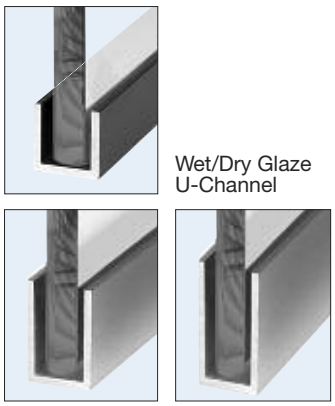

Wet/Dry Glaze U-Channel

'ALL-GLASS' SYSTEMS

CRL-Blumcraft Head Channels

- Channels for 1/2" or 3/4" (12 or 19) Tempered Glass
- Accepts Glazing Gaskets, Top Pivots, and Snap-In Filler Strips
- Available in Five Architectural Finishes
- Custom Finishes, Including Oil Rubbed Bronze, Are Available on Special Order

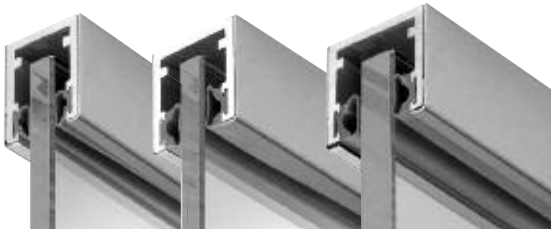

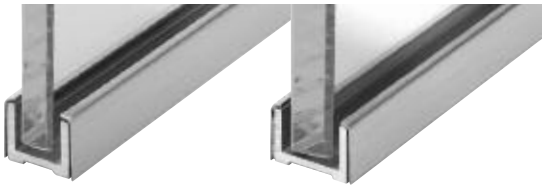

CRL-Blumcraft Wet Glaze U-Channels

- Channels for 1/2" or 3/4" (12 or 19) Tempered Glass
- Available in Five Architectural Finishes
- Custom Finishes, Including Oil Rubbed Bronze, Are Available on Special Order

USE MONOLITHIC TEMPERED GLASS

CRL-Blumcraft Floating Transom System

- Suspended Stainless Steel Rods
- No Holes or Notches in Transom or Sidelites
- For 1/2" or 3/4" (12 or 19) Tempered Glass
- Available in Five Architectural Finishes
- Custom Finishes Including Oil Rubbed Bronze Available on Special Order

CRL-Blumcraft Catalogs

CAT. NO. B2010
Tempered Glass Doors, Panic, Deadbolt, and Dummy Hardware

CAT. NO. D2010
Display Case Door Series 1301

CAT. NO. HW2010
Tubular Architectural Hardware

CAT. NO. M2010
Railings, Smoke Baffles, Glass Gates

'ALL-GLASS' SYSTEMS

CRL Commercial Glass Door Accessories

CRL STOCK SIZE HEADERS FOR OVERHEAD CONCEALED DOOR CLOSERS

- Five Stock Architectural Finishes
- Includes Snap-In Cover Plates
- 4" and 4-1/2" (102 and 114) Widths

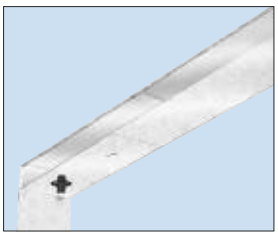

Typical Installation Showing Exposed Spindle of Overhead Closer

36" (914) Single Door | 72" (1829) Double Door | Custom Lengths

Sidelite Glazing Pocket

CRL CUSTOM LENGTH DOOR HEADERS WITH GLAZING POCKET

Fixed Panel Section With Glazing Gasket

Header Section

- Five Stock Finishes
- Available in 4" or 4-1/2" (102 and 114) Widths for 3/8", 1/2", 5/8", and 3/4" (10 to 19) Glass

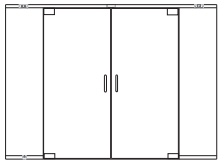

Typical Double Glass Doors with Sidelites

CRL FLOATING HEADER FOR OVERHEAD CONCEALED DOOR CLOSERS

- Available for 1/2" (12) Glass-to-Glass or Glass-to-Wall Installations With or Without Overhead Concealed Door Closers
- Stock 36" (914) Single and 72" (1829) Double Headers, With Custom Sizes Available
- Available in Five Stock Architectural Finishes

CRL HAT CHANNEL DOOR CLOSER HEADER FOR SINGLE AND DOUBLE DOORS

- Surrounded by "L" Angle to Support Ceiling Tiles
- White Finish to Match Ceiling "T" Bar
- Provides an Almost Invisible Look

CRL HAT CHANNEL FOR FIXED GLAZING

- White Finish to Match Ceiling "T" Bar
- Accepts 3/8" or 1/2" (10 or 12) Glass
- Glass Secured With Silicone Sealant or Roll-in Glazing Vinyl

COMPLETE LINE OF COMMERCIAL DOOR PULLS

- Beautiful Accessories for Frameless 'All-Glass' Entrance Doors and Sidelites
- Custom Finishes and Sizes Available
- New Selection of Locking Ladder Pulls

'ALL-GLASS' SYSTEMS

CRL Center Locks for 'All-Glass' Doors

MANUFACTURED IN THE USA BY C.R. LAURENCE
An ISO9001:2008 Certified Company

USE MONOLITHIC TEMPERED GLASS

- **Available in 4" x 10", 6" x 10", and New Low Profile Models**
- **Choose From Three Types: Deadlatch, Long Throw Deadlock, and Hook Throw Deadlock**
- **For Use With 1/2" (12) Tempered Glass; Custom Sizes for Other Glass Thicknesses Available on Special Order**
- **Installs Easily With Bolts; No Messy Silicone or Cement Required**
- **Available in Five Stock Finishes Plus Custom Finishes on Special Order**

CRL Center Locks are available in three types: Deadlatch, Long Throw Deadlock, and Hook Throw Deadlock. A variety of pull handles and latch-operating devices (Thumbturns, Keyed Cylinders, Lever Handles, and Paddle Handles) are available to accommodate different requirements.

We carry stock units for immediate shipment, and can fabricate custom units that can be shipped within one week.

4" X 10" CENTER LOCKS AND GLASS KEEPERS

4" X 10" Center Lock With Deadlatch

4" X 10" Center Lock Glass Keeper

4" X 10" Center Lock With Long Throw Deadlock

4" X 10" Center Lock With Hook Throw Deadlock

4" X 10" Center Lock Glass Keeper

4" X 10" Center Lock Glass Keeper With Electric Strike

6" X 10" CENTER LOCKS AND GLASS KEEPERS

6" X 10" Center Office Lock

6" X 10" Center Entrance Lock

6" X 10" Center Passage Lock

6" X 10" Center Storeroom Lock

6" X 10" Center Classroom Lock

6" X 10" Center Push Button Lock

6" X 10" Center Lock Glass Keeper

6" X 10" Center Lock Glass Keeper

6" X 10" Center Lock Glass Keeper With Electric Strike

LOW PROFILE CENTER LOCKS AND KEEPERS

2-3/4" X 5-5/8" Low Profile Center Lock

1-3/4" X 5-5/8" Low Profile Glass Keeper

P

'ALL-GLASS' SYSTEMS

CRL-Blumcraft 150 Series Doors and Sidelites

- **Narrow Profile Rails Fully Glazed With 1/2", 5/8" or 3/4" (12, 16 or 19) Tempered Glass**
- **Six Standard Architectural Finishes**
- **Custom Finishes Available**
- **Available With Matching Fully Glazed Sidelites**

CRL–Blumcraft 150 Series Doors and Sidelites are supplied fully glazed with 1/2", 5/8" or 3/4" (12, 16 or 19) tempered glass in clear, tinted, or low-iron. Rails are bonded to the glass, and can be prepped for a wide variety of door closer and pivot hardware. A Bottom Rail Lock option is available, or the doors can come complete with any of our Egress Handles mounted on the door, ready to install in the opening.

150 Series Doors have a solid aluminum, narrow profile rail design which can be used top or bottom. Available in six standard finishes: satin anodized, black bronze anodized, black powder coat, brushed and polished stainless steel, and polished brass. Custom finishes are available on special order. Maximum door size is 42" (1067) wide by 108" (2743) tall.

Series 150 Door

Shown With Panic Handle PA100D

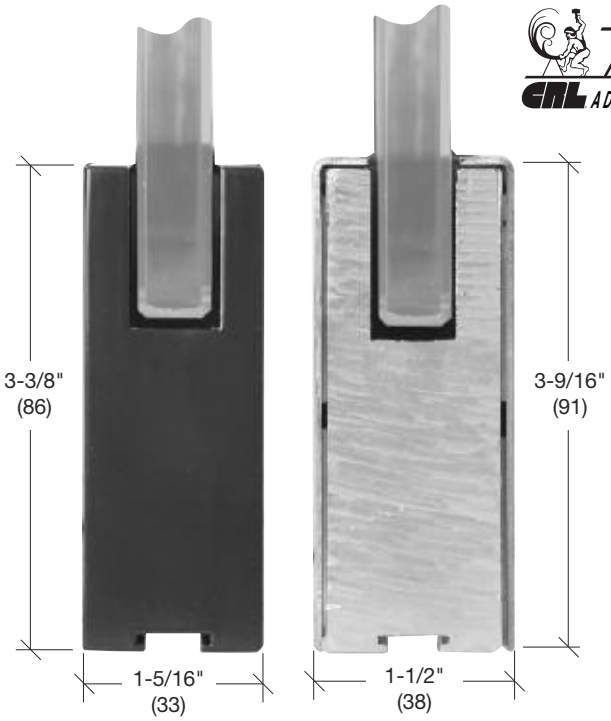

Non-Clad **Clad**

Typical Top or Bottom Rail
for 150 and 250 Series Doors and Sidelites

Adjustable pivot blocks are installed in the Rails to suit the door closer hardware selected for the project. When overhead door closers are specified, the 150 Series Doors come with an adjustable pivot arm in the Top Rail, and a heavy-duty bottom pivot designed to work with the narrow profile rails. Similarly, when floor mounted door closers are specified, the Doors come with an adjustable heavy-duty top and bottom inserts to accept the floor mounted door closer and top pivot hardware.

Fully glazed sidelites are available to match the 150 Series Doors. They have Rails made from solid aluminum, anodized or clad, just like the doors, creating a uniform look throughout the opening.

'ALL-GLASS' SYSTEMS

CRL-Blumcraft 250 Series Doors and Sidelites

- **Narrow Profile Rails With Vertical Stiles**
- **Fully Glazed With 1/2", 5/8" or 3/4" (12, 16 or 19) Tempered Glass**
- **Six Standard Architectural Finishes**
- **Custom Finishes Available**
- **Available With Matching Fully Glazed Sidelites**

CRL-Blumcraft 250 Series Doors and Sidelites are supplied fully glazed with 1/2", 5/8" or 3/4" (12, 16 or 19) tempered glass in clear, tinted, or low-iron. Rails and Vertical Stiles are bonded to the glass, and can be prepped for a wide variety of door closer and pivot hardware. A Bottom Rail Lock option is available, or the doors can come complete with any of our Egress Handles mounted on the door, ready to install in the opening.

250 Series Doors have the same solid aluminum narrow profile rail design found on the 150 Series Doors, but also have narrow vertical stiles with or without weatherstripping. Available in six standard finishes: satin anodized, black bronze anodized, black powder coat, brushed and polished stainless steel, and polished brass. Custom finishes are available on special order. Maximum door size is 42" (1067) wide by 108" (2743) tall.

Adjustable pivot blocks are installed in the Rails to suit the closer hardware selected for the project. When overhead door closers are specified, the 250 Series Doors come with an adjustable pivot arm in the Top Rail, and a heavy-duty bottom pivot designed to work with the narrow profile rails. Similarly, when floor mounted door closers are specified, the Doors come with an adjustable heavy-duty top, and bottom inserts to accept the floor mounted door closer and top pivot hardware.

250 Series Door
Shown With Deadbolt Handle DB170JS

Fully glazed sidelites are available to match the 250 Series Doors. They have rails made from solid aluminum, anodized or clad, just like the doors, creating a uniform look throughout the opening.

Aluminum
250 Series Door Stile
Without Weatherstripping

Bronze or Stainless Steel
250 Series Door Stile
With Weatherstripping

'ALL-GLASS' SYSTEMS

CRL-Blumcraft 1301 Series Entrance Doors and Sidelites

MANUFACTURED IN THE USA BY C.R. LAURENCE
An ISO9001:2008 Certified Company

USE MONOLITHIC TEMPERED GLASS

- **More Glass, Less Metal!**
- **Fully Glazed With 1/2", 5/8" or 3/4" (12, 16 or 19) Tempered Glass**
- **Ready to Install, No Assembly Required**
- **Solid Stainless Steel or Bronze Rail Construction**
- **Rails as Slim as 3/4" x 3/4" (19 x 19)**
- **Complete With Egress Handle if Required**

CRL-Blumcraft 1301 Series Entrance Doors are the original. Often imitated but never matched, this system provides the most glass with the least metal of any entrance door system in the industry.

Made from solid stainless steel or bronze and finished in either brushed or mirror finishes, as well as oil rubbed bronze. Top Rail sizes do vary based on types of hardware used on the doors. Consult Tech Sales for more information on your particular application.

A standard 1301 Series System includes our C7500 Series Head Channel with adjustable top pivot and customized floor closer, providing the installer with ample adjustment opportunities. Common 4", 4-1/2", and 6" (102, 114, and 152) Headers are also available to meet design requirements.

Blumcraft OF PITTSBURGH
CRL A DIVISION OF C.R. LAURENCE CO., INC.

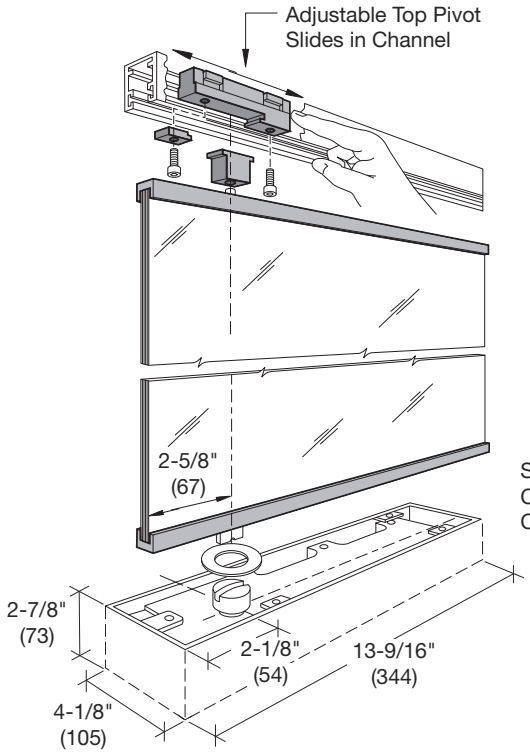

Typical Installation With Floor Mounted Door Closer

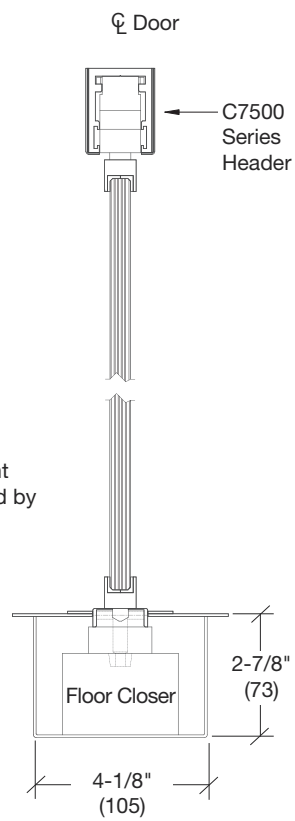

Compatible With Overhead Door Closers

When job conditions do not allow for a floor mounted door closer, the 1301 Series Entrance Door can be configured to work with an overhead concealed door closer. A custom 1" (25) high Top Rail with sideload adaptor and specially designed bottom pivot make this application clean and simple, while maintaining the "more glass, less metal" theme.

Fully Glazed Matching Fixed Panels

Fully glazed sidelites are also available with matching Top and Bottom Rails. For those installations that require field glazing of the fixed panels we offer Wet Glaze Channels.

'ALL-GLASS' SYSTEMS

CRL-Blumcraft 1200 Series Doors

- **Doors Up to 12 Feet (3.6 m) Tall**
- **No Top or Bottom Rails**
- **Fully Glazed With 1/2" (12) Tempered Glass**
- **Patented Wedge-Lock™ Glass Securing System**
- **Available in Six Standard Architectural Finishes**

CRL-Blumcraft 1200 Series Doors can be made up to 12 feet (3.6 m) tall and have no top or bottom rails. Instead they have a Vertical Pivot Tube that runs the height of the door, achieving what appears to be truly 'all-glass' door.

1200 Series Doors are supplied fully glazed with 1/2" (12) tempered glass in clear, tinted, or low-iron. We have incorporated our patented Wedge-Lock™ Glass Securing System into a 5" (127) diameter Vertical Pivot Tube, ensuring a non-slip environment for the life of the door. The Pivot Tube is clad in one of six architectural finishes: satin anodized, black bronze anodized, black powder coat, brushed and polished stainless steel, and polished brass. Custom finishes are available on special order.

With no rails top or bottom, the entire weight of the door is transferred through the Vertical Pivot Tube to a specially engineered, heavy-duty, load-bearing cement case, independent of the floor mounted door closer. 1200 Series Doors utilize a heavy-duty walking beam pivot at the top of the Vertical Pivot Tube that can be incorporated into a variety of different headers to create the desired look. Floor mounted door closer functionality is preserved in this uniquely different entrance system.

LOCKING HARDWARE

1200 Series Doors can be equipped with any of our Egress Handles, Locking Ladder Pulls, or Patch Locks to offer a secure opening. All hardware comes mounted to the door and is ready for installation.

WEDGE-LOCK™ GLASS SECURING SYSTEM

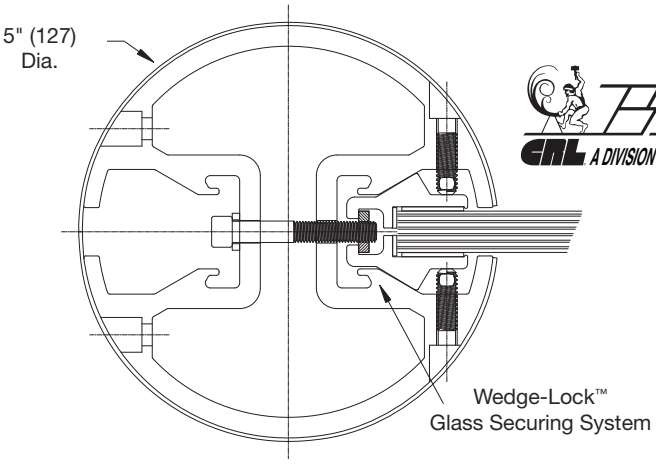

'ALL-GLASS' SYSTEMS

CRL Frameless Storefront and Entrance Patch Hardware

- An Excellent Choice for 'All-Glass' Entrances
- Provides Frameless Storefront Appearance for Unobstructed Display of Merchandise
- Allows Combination of Aesthetics and Versatility
- A Complete Selection of Products Including Patch Fittings, Inserts and Pivots, Lever Locks and Latches, Concealed Overhead and Floor Closers, Door Handles, and Many More Accessories

COMMON APPLICATIONS:

- Mall Fronts
- Retail Outlets
- Hotels
- Arenas and Museums
- Office Buildings
- Restaurants and Clubs

USE MONOLITHIC TEMPERED GLASS

CRL U.S. ALUMINUM

'ALL-GLASS' SYSTEMS

POPULAR CONFIGURATIONS OF TEMPERED GLASS ASSEMBLIES

USE MONOLITHIC TEMPERED GLASS

Single Door With Manual Top and Bottom Pivots

Single Door With Floor Closer

Single Door With Concealed Overhead Closer

Single Door and Sidelite With Top and Bottom Manual Pivots

Single Door and Sidelite With Floor Closer

Single Door and Sidelite With Concealed Overhead Closer

Single Door and Transom With Top and Bottom Manual Pivots

Single Door and Transom With Floor Closer

Single Door, Transom, and Sidelite With Top and Bottom Manual Pivots

Single Door, Transom, and Sidelite With Floor Closer

Single Door, Transom, and Sidelites With Top and Bottom Manual Pivots

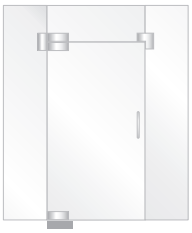
Single Door, Transom, and Sidelites With Floor Closer

Paired Doors With Top and Bottom Manual Pivots

Paired Doors With Floor Closers

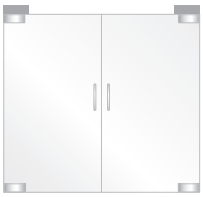
Paired Doors With Concealed Overhead Closers

Paired Doors and Transom With Top and Bottom Manual Pivots

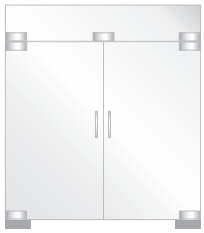
Paired Doors and Transom With Floor Closers

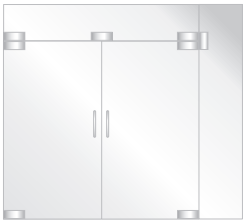
Paired Doors, Transom, and Sidelite With Top and Bottom Manual Pivots

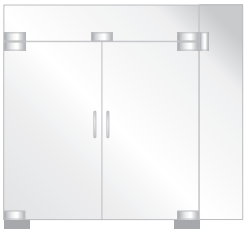
Paired Doors, Transom, and Sidelite With Floor Closers

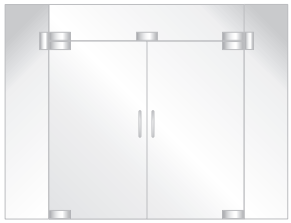
Paired Doors, Transom, and Sidelites With Top and Bottom Manual Pivots

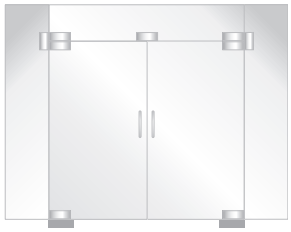
Paired Doors, Transom, and Sidelites With Floor Closers

'All-GLASS' SYSTEMS

CRL Beretta Series Patch Fitting System for Pivoting 'All-Glass' Doors

- **New Contemporary Style for Use With 3/8" or 1/2" (10 or 12) Tempered Glass**
- **Minimal Glass Fabrication Required**
- **Great for Interior Offices, Conference Rooms or Display Cases**
- **Available in Polished Chrome and Brushed Nickel Finishes**

The Beretta Series is the latest addition to our comprehensive Patch Fitting Program, and it gives the typical 'all-glass' door a totally new look! Beretta's cylindrical design offers a unique and fresh look for interior office or conference room doors. The compact closing mechanism reduces the impact a typical closer has on an opening, and with the availability of free-swinging top and bottom pivots the doors look like they are floating on air.

- **Choose From a Complete Array of Components**

Model BS10
Self-Closing Floor Closer

Model BS30
Top Door Patch With Pivot

Model BS60
End Mount Light-Duty Fixed Panel Clamp

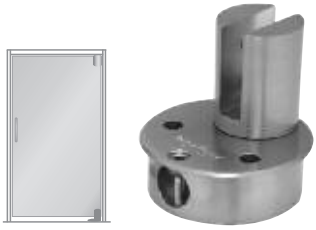

Model BS20
Self-Closing Floor Closer With Door Patch

Model BS40
Transom/Wall Mount Pivot Patch

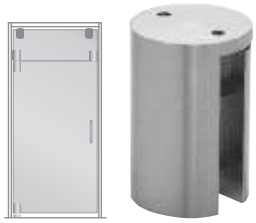

Model BS70
End Mount Heavy-Duty Fixed Panel Clamp

Model BS8X8
8"CTC Pull Handle

Model BS20X20
20"CTC Pull Handle

Model BS50
Bottom Door Patch With Pivot

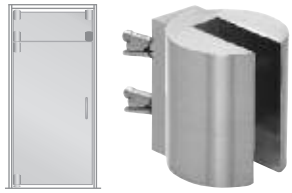

Model BS80
Wall Mount Fixed Panel Clamp

Online usalum.com By Phone (800) 262-5151 Ext. 7700
Online crlaurence.com By Phone (800) 421-6144 Ext. 7700

'All-GLASS' SYSTEMS

CRL Laguna Pivot Door System

- **All 316 Alloy Brushed Stainless Steel Construction**
- **Ideal for Interior Room Applications**
- **For Use With 3/8" or 1/2" (10 or 12) Tempered Glass**
- **Comes With All Fasteners Needed for Either Flush Mount (Countersunk) or Surface Mount (Straight Hole) Glass Fabrication**

Our Laguna Series Hardware brings a contemporary look to interior home or office partitions. Made of high-grade 316 alloy stainless steel, it will give years of reliable function and modern beauty to your projects.

The CRL Laguna Pivot Door System can be used with free-swinging doors, or doors controlled by floor mounted door closers. CRL provides you with all of the Glass Fasteners for either flush mounting, which requires a countersunk hole, or surface mounting, where a straight hole is needed. The Glass Fasteners will accommodate either 3/8" or 1/2" (10 or 12) tempered glass.

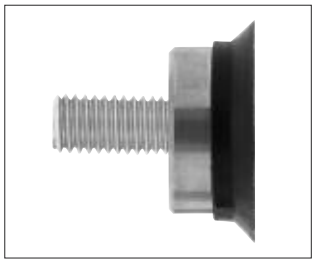

Flush Mount Fastener

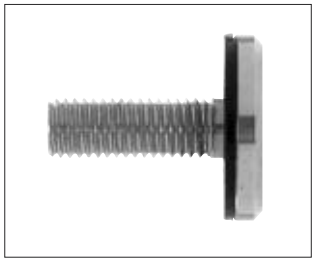

Surface Mount Fastener

Model LS14BS

Model LS24BS

Model LS34BS

'All-GLASS' SYSTEMS

CRL Laguna Series Sliding Glass Door System With Anti-Lift Safety Features

- New Anti-Lift Features for Added Safety
- All 316 Alloy Brushed Stainless Steel Construction
- Ideal for Interior Applications
- For Use With 3/8" or 1/2" (10 or 12) Tempered Glass
- Comes With All Fasteners Needed for Either Flush (Countersunk) or Surface (Straight Hole) Mounting
- Custom Adaptor Kits Available for Wood Door Applications

Model LS302BS
Wall Mount Clamp

Model LS303BS
Glass Mount Clamp

TYPICAL WALL MOUNT INSTALLATION

TYPICAL GLASS MOUNT INSTALLATION

'All-GLASS' SYSTEMS

CRL Laguna Series Sliding Glass Door Kits

WALL MOUNT SINGLE SLIDER KIT

- All Kits Contain the Necessary Hardware to Complete the Installation (Except the Tempered Glass)

Model LSWM3BS

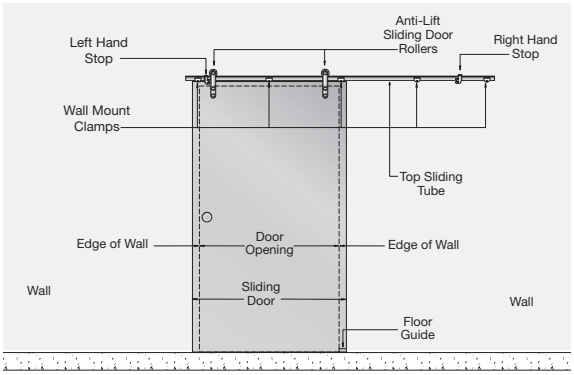

WALL MOUNT BI-PARTING SLIDER KIT

- All Kits Can Be Used With 3/8" (10) or 1/2" (12) Tempered Glass

Model LSWM4BS

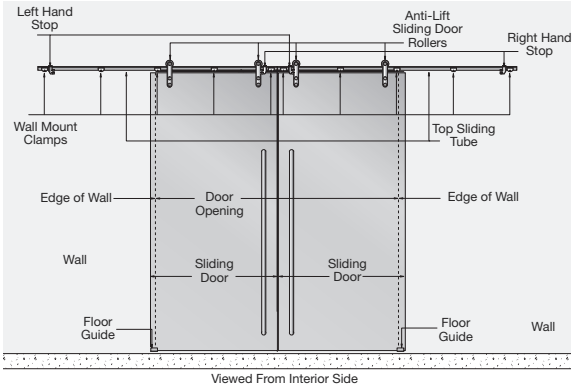

GLASS MOUNT SINGLE SLIDER KIT

- Brushed Stainless Steel Construction for Years of Trouble-Free Operation

Model LSGM3BS

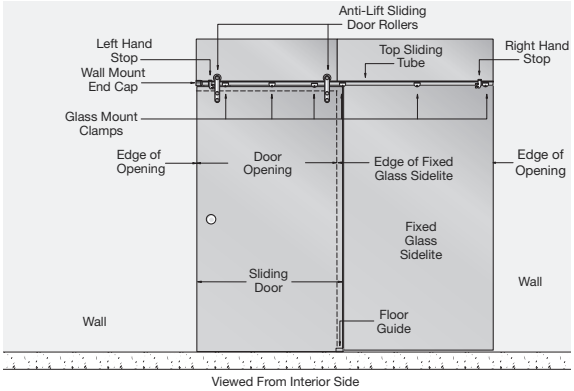

GLASS MOUNT SINGLE SLIDER WITH SIDELITES KIT

- Glass Fabrication Details and Drawings Available Online at crlaurence.com

Model LSGM4BS

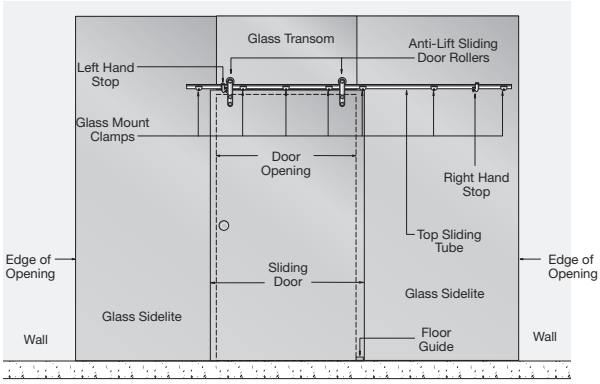

'ALL-GLASS' SYSTEMS

CRL50/51 Series Top Hung Sliding Door Systems

- Models for Single Doors, Synchronized Doors, and Telescoping Doors
- For Use With 5/16" (8) or 3/8" (10) Tempered Glass
- Heavy-Duty Systems Can Accommodate Doors Weighing Up to 176 Pounds (80 kg)
- No Notches or Holes Required in the Glass
- All Kits Have a Satin Anodized Finish

USE MONOLITHIC TEMPERED GLASS

KITS FOR WALL MOUNT

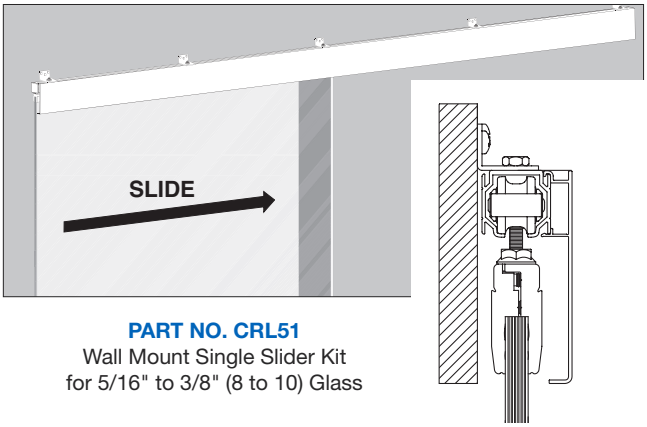

PART NO. CRL51
Wall Mount Single Slider Kit
for 5/16" to 3/8" (8 to 10) Glass

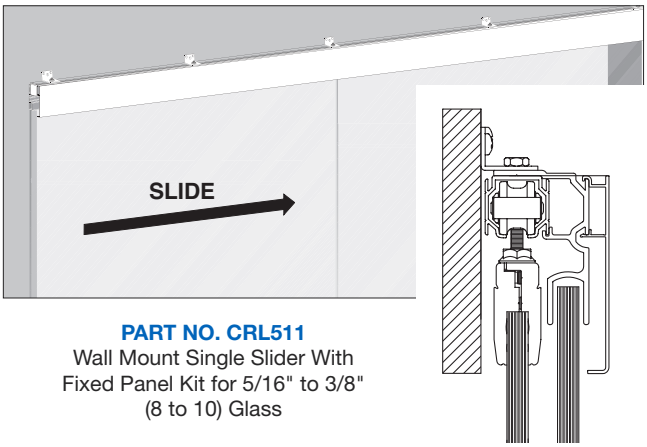

PART NO. CRL511
Wall Mount Single Slider With
Fixed Panel Kit for 5/16" to 3/8"
(8 to 10) Glass

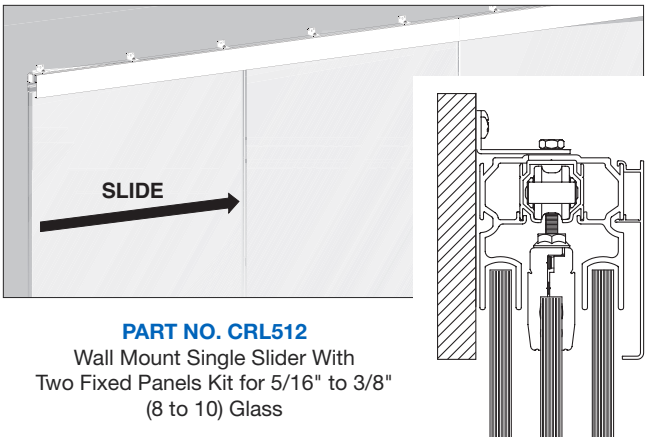

PART NO. CRL512
Wall Mount Single Slider With
Two Fixed Panels Kit for 5/16" to 3/8"
(8 to 10) Glass

KITS FOR CEILING MOUNT

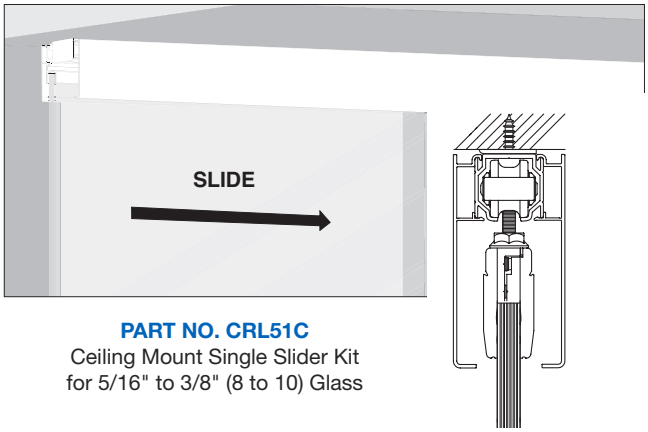

PART NO. CRL51C
Ceiling Mount Single Slider Kit
for 5/16" to 3/8" (8 to 10) Glass

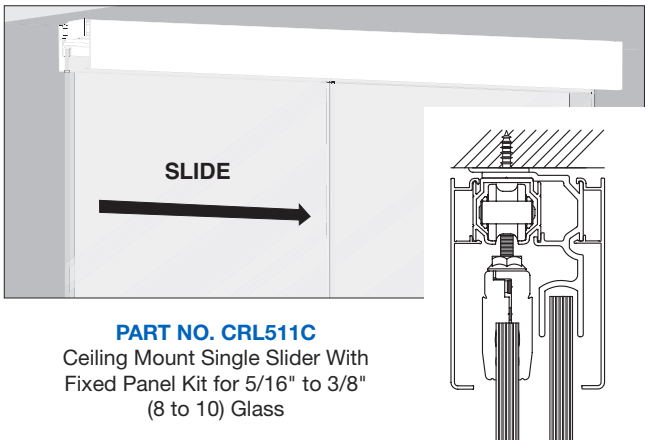

PART NO. CRL511C
Ceiling Mount Single Slider With
Fixed Panel Kit for 5/16" to 3/8"
(8 to 10) Glass

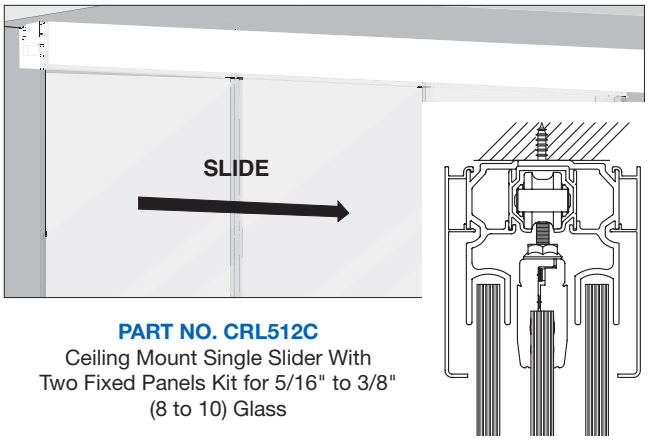

PART NO. CRL512C
Ceiling Mount Single Slider With
Two Fixed Panels Kit for 5/16" to 3/8"
(8 to 10) Glass

'ALL-GLASS' SYSTEMS

KITS FOR DROPPED CEILING MOUNT

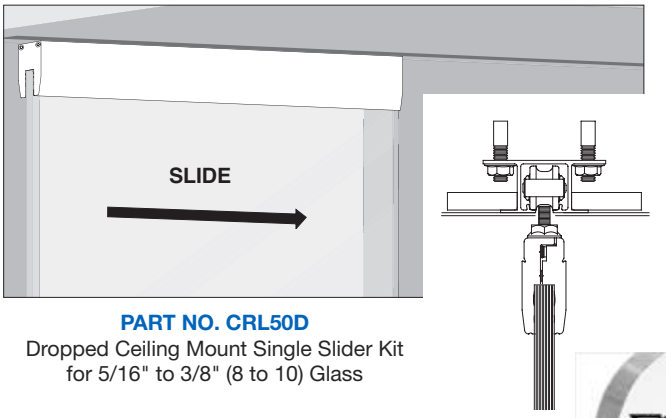

PART NO. CRL50D
Dropped Ceiling Mount Single Slider Kit for 5/16" to 3/8" (8 to 10) Glass

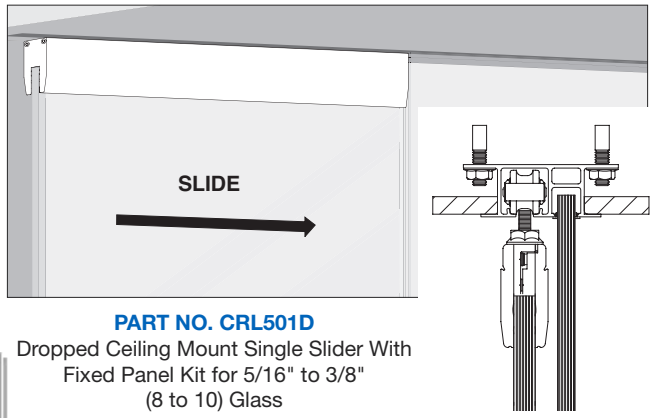

PART NO. CRL501D
Dropped Ceiling Mount Single Slider With Fixed Panel Kit for 5/16" to 3/8" (8 to 10) Glass

SYNCHRONIZED BI-PARTING SLIDER KITS

- **Synchronized Operation of Two Bi-Parting Panels**
- **For 5/16" to 3/8" (8 to 10) Tempered Glass**
- **Wall and Ceiling Mount Models Available**
- **Satin Anodized Finish**

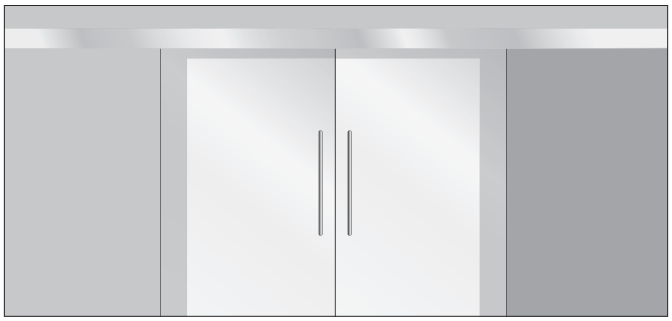

PART NO. CRL50S2
Wall Mount Bi-Parting Slider Kit for 5/16" to 3/8" (8 to 10) Glass

PART NO. CRL50CS2
Ceiling Mount Bi-Parting Slider Kit for 5/16" to 3/8" (8 to 10) Glass

SYNCHRONIZED BI-PARTING SLIDER WITH TWO FIXED PANELS KIT

- **For 5/16" to 3/8" (8 to 10) Tempered Glass**
- **Mounts to Wall or Soffit**
- **Satin Anodized Finish**

PART NO. CRL502S2
Wall Mount Bi-Parting Slider Kit for 5/16" to 3/8" (8 to 10) Glass

PART NO. CRL502CS2
Ceiling Mount Bi-Parting Slider Kit for 5/16" to 3/8" (8 to 10) Glass

TELESCOPING DOOR KITS

- **For 5/16" or 3/8" (8 or 10) Tempered Glass**
- **Satin Anodized Finish**

PART NO. CRL501CP2L
Left Direction Stacking Kit for 5/16" to 3/8" (8 to 10) Glass

PART NO. CRL501CP2R
Right Direction Stacking Kit for 5/16" to 3/8" (8 to 10) Glass

'ALL-GLASS' SYSTEMS

CRL70 Series Top Hung Sliding Door Systems

- For Use With 5/16", 3/8 or 1/2" (8, 10 or 12) Tempered Glass or Wood Doors
- Heavy-Duty Systems Can Accommodate Doors Weighing Up to 275 Pounds (125 kg)
- No Notches or Holes Required in the Glass
- All Kits Have a Satin Anodized Finish

USE MONOLITHIC TEMPERED GLASS

KITS FOR WALL MOUNT

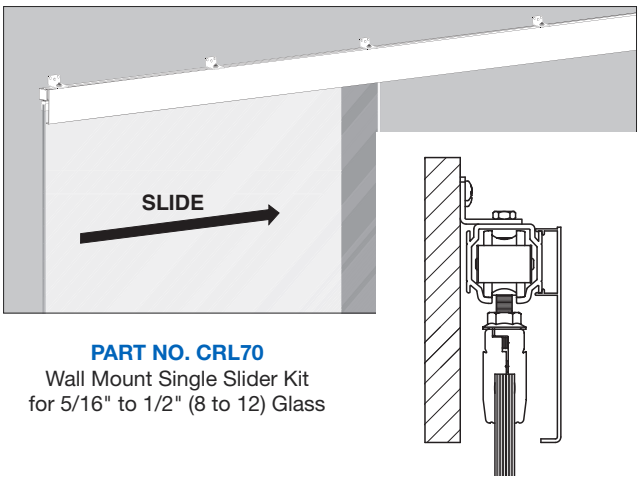

PART NO. CRL70
Wall Mount Single Slider Kit
for 5/16" to 1/2" (8 to 12) Glass

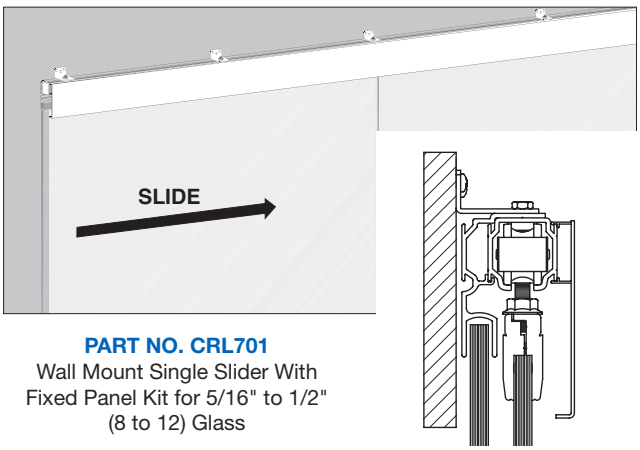

PART NO. CRL701
Wall Mount Single Slider With
Fixed Panel Kit for 5/16" to 1/2"
(8 to 12) Glass

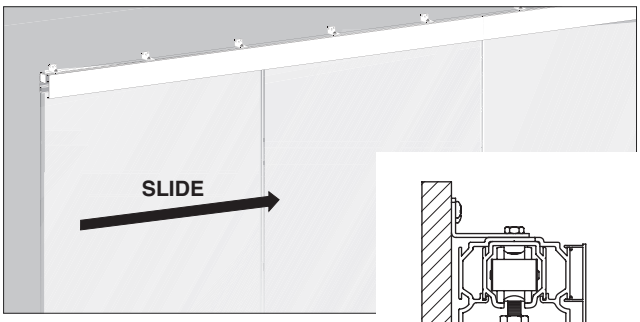

PART NO. CRL702
Wall Mount Single Slider With
Two Fixed Panels Kit for 5/16" to 1/2"
(8 to 12) Glass

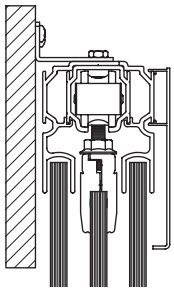

KITS FOR CEILING MOUNT

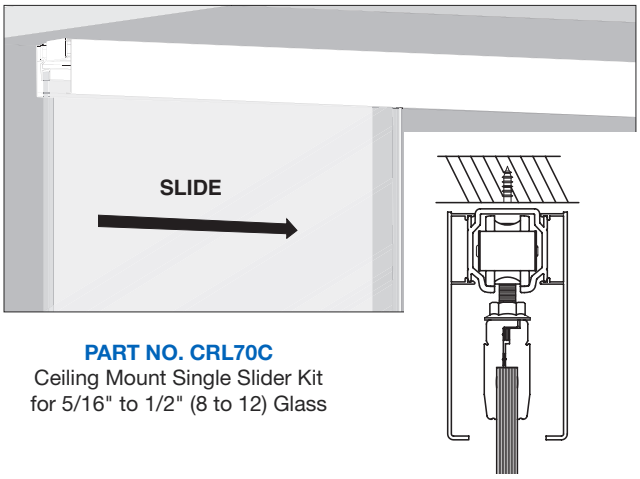

PART NO. CRL70C
Ceiling Mount Single Slider Kit
for 5/16" to 1/2" (8 to 12) Glass

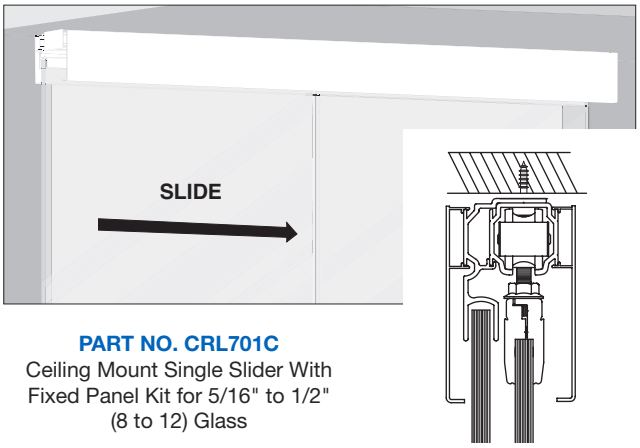

PART NO. CRL701C
Ceiling Mount Single Slider With
Fixed Panel Kit for 5/16" to 1/2"
(8 to 12) Glass

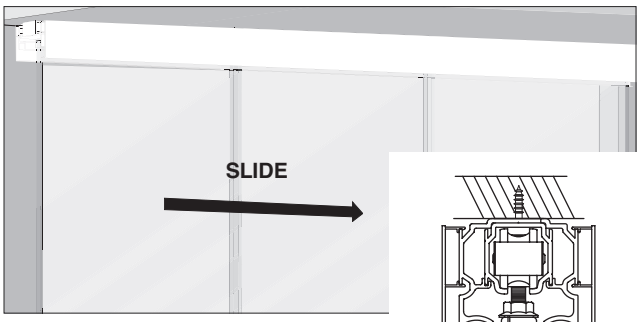

PART NO. CRL702C
Ceiling Mount Single Slider With
Two Fixed Panels Kit for 5/16" to 1/2"
(8 to 12) Glass

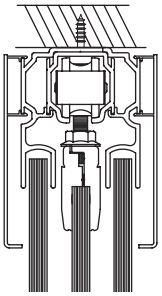

'ALL-GLASS' SYSTEMS

CRL EZ-Slide Top Hung Single Track Sliding Door Kits

- **No Notches or Holes Needed in the Glass for Installation**
- **Cost Effective 'All-Glass' Doors for Commercial or Residential Use**

80 SERIES SLIDING DOOR KIT

- **This Kit is for 5/16" (8) or 3/8" (10) Tempered Glass**
- **Rated for Panels Weighing Up to 176 Pounds (80 kg)**

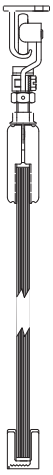

Typical Single Slider Application
PART NO. CRL3301

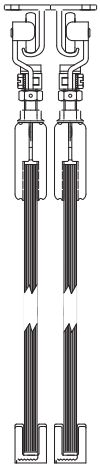

Typical Bi-Pass Application using two **PART NO. CRL3301**

180 SERIES SLIDING DOOR KIT

- **This Kit is for 3/8" (10) or 1/2" (12) Tempered Glass**
- **Rated for Panels Weighing Up to 396 Pounds (180 kg)**

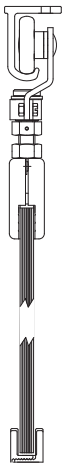

Typical Single Slider Application
PART NO. CRL3601

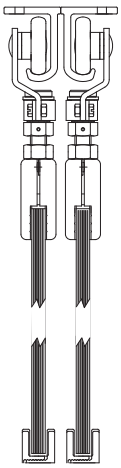

Typical Bi-Pass Application using two **PART NO. CRL3601**

CRL70 SERIES SLIDING WOOD DOOR KIT

- **Exclusively for Wood Doors Weighing Up to 275 Pounds (125 kg)**
- **Mounts to Wall or Ceiling**
- **Top Hanger is Mortised Into the Door**

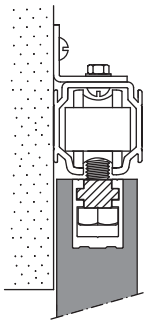

Wall Mount

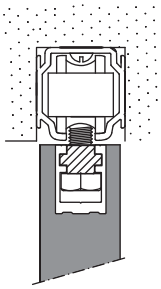

Ceiling Mount

PART NO. CRL70W
Wall or Ceiling Mount Sliding Wood Door Kit

'All-GLASS' SYSTEMS

CRL285 Series Top Hung Sliding Door System

- **For Use With 5/16", 3/8", or 1/2" (8, 10, or 12) Tempered Glass**
- **Rated for Doors Weighing Up to 176 Pounds (80 kg)**
- **No Notches or Holes Required in the Glass for Installation**

SINGLE SLIDER KITS

This configuration of the CRL280 Series Slider is used for single door applications where the Top Track mounts to a structural ceiling. Kit includes all the components you will need (except the tempered glass and pull hardware) to complete this style of installation. **NOTE:** Laminated glass should not be used.

PART NO.	FOR GLASS THICKNESS
CRL28510	5/16" to 3/8" (8 to 10)
CRL28512	1/2" (12)

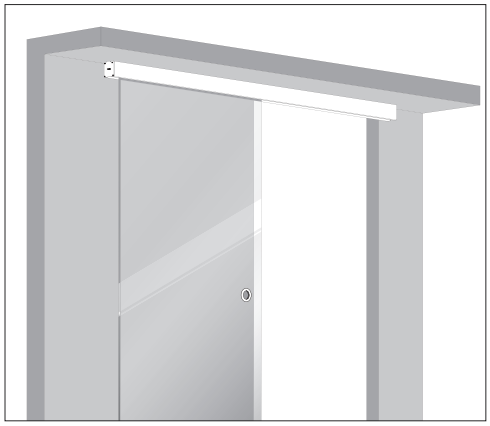

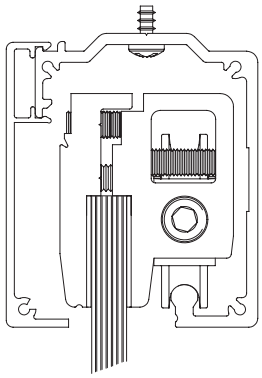

SINGLE SLIDER WITH FIXED PANEL KITS

This configuration of the CRL280 Series Slider is used for single door with fixed panel applications where the Top Track mounts to a structural ceiling. Kit includes all the components you will need (except the tempered glass and pull hardware) to complete this style of installation.
NOTE: Laminated glass should not be used.

PART NO.	FOR GLASS THICKNESS
CRL28510F	5/16" to 3/8" (8 to 10)
CRL28512F	1/2" (12)

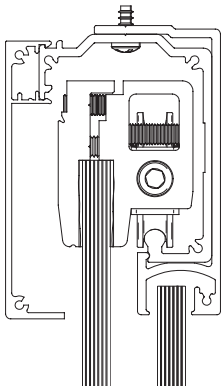

GLASS MOUNT SINGLE SLIDER KITS

This configuration of the CRL280 Series Slider is used for single door applications where the top track mounts to a 3/8" or 1/2" (10 or 12) fixed glass panel. Kit includes all the components you will need (except the tempered glass and pull hardware) to complete this style of installation.
NOTE: Laminated glass should not be used.

PART NO.	FOR GLASS THICKNESS
CRL28510G	5/16" to 3/8" (8 to 10)
CRL28512G	1/2" (12)

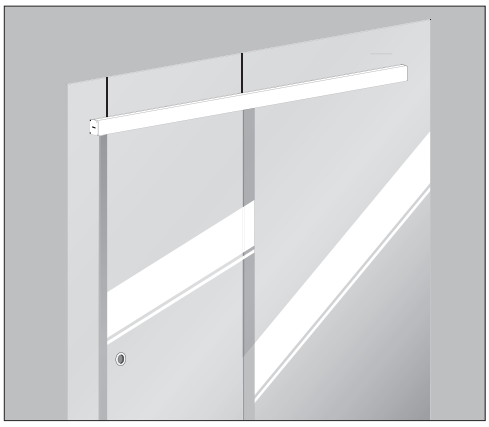

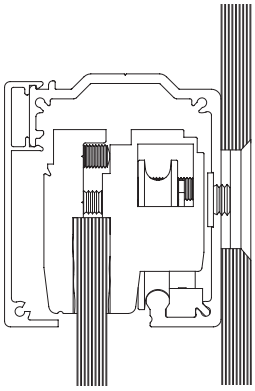

For full details and kit prices go to crlaurence.com.
These and other CRL Heavy Glass Sliding Door Systems can be seen in our CRL63A Architectural Hardware Catalog.

CRL U.S. ALUMINUM

'All-GLASS' SYSTEMS

CRL GSDH Series Bottom Rolling Door System

- **Bottom Rolling Design for Use With 5/16", 3/8" or 1/2" (8, 10 or 12) Tempered Glass**
- **Top Guide Track Mounts to Wall**
- **Can Accommodate Doors Weighing Up to 286 Pounds (130 kg)**
- **Brushed or Polished Stainless Steel Finishes**

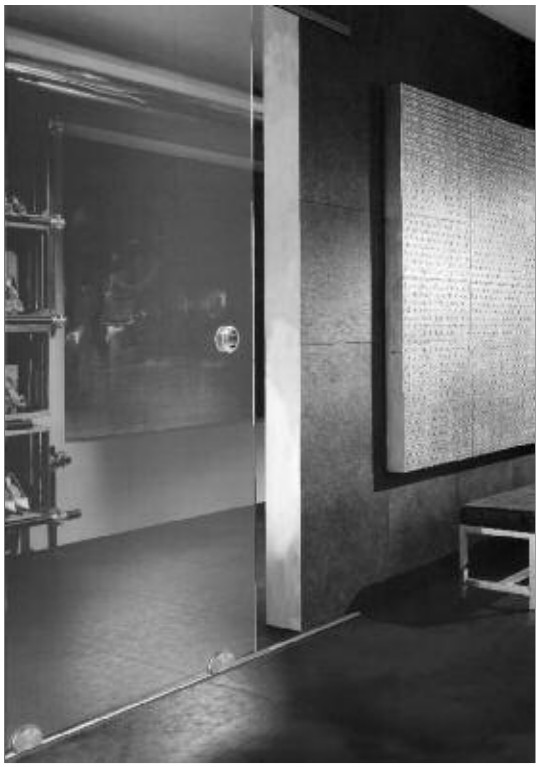

Single Bottom Rolling Door Installation Assembly

Model GSDH1

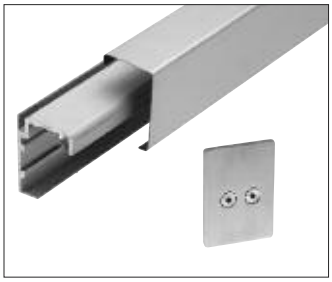

Top Guide Track at 157" (4 m) in Length and Two End Caps

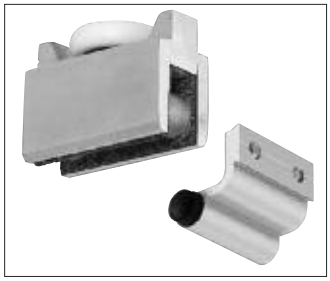

Top Roller Guides and Four Stops

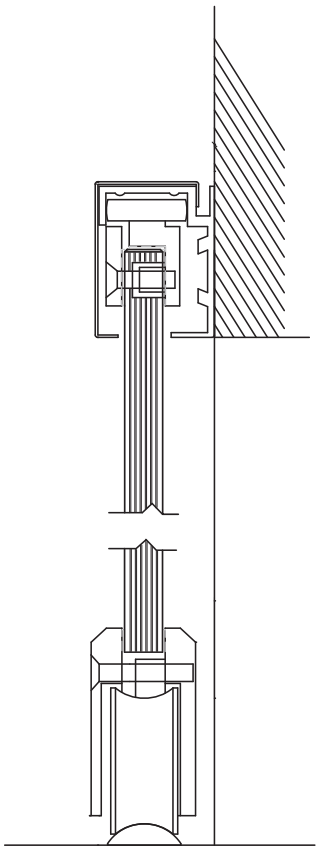

Bi-Parting Bottom Rolling Door Installation Assembly

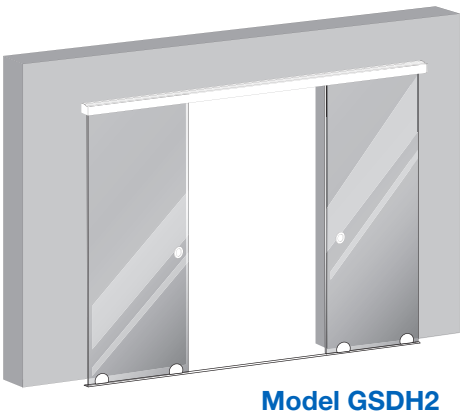

Model GSDH2

Bottom Rollers

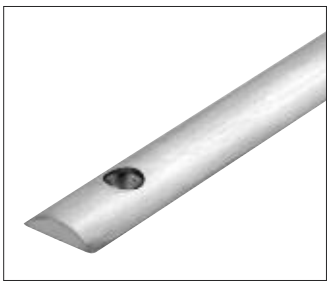

Bottom Roller Track at 118" (3 m) in Length

P

'All-GLASS' SYSTEMS

CRL Bottom Rolling Sliding Door Systems

- Variety of Styles and Finishes Available for Use With 3/8" or 1/2" (10 or 12) Tempered Glass
- Three Rail Combinations Featuring 4" (102) Tapered, 4" (102) Square, and 6" (152) Square Rails With Our Wedge-Lock™ Glass Securing System
- Each Unit Custom Built to Fit the Opening
- Available in Seven Architectural Finishes

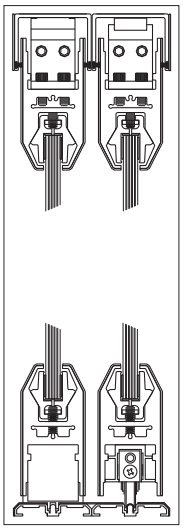

Model SDR

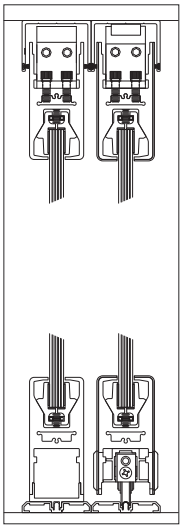

Model 4SDR

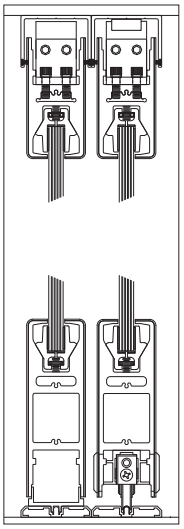

Model 6SDR

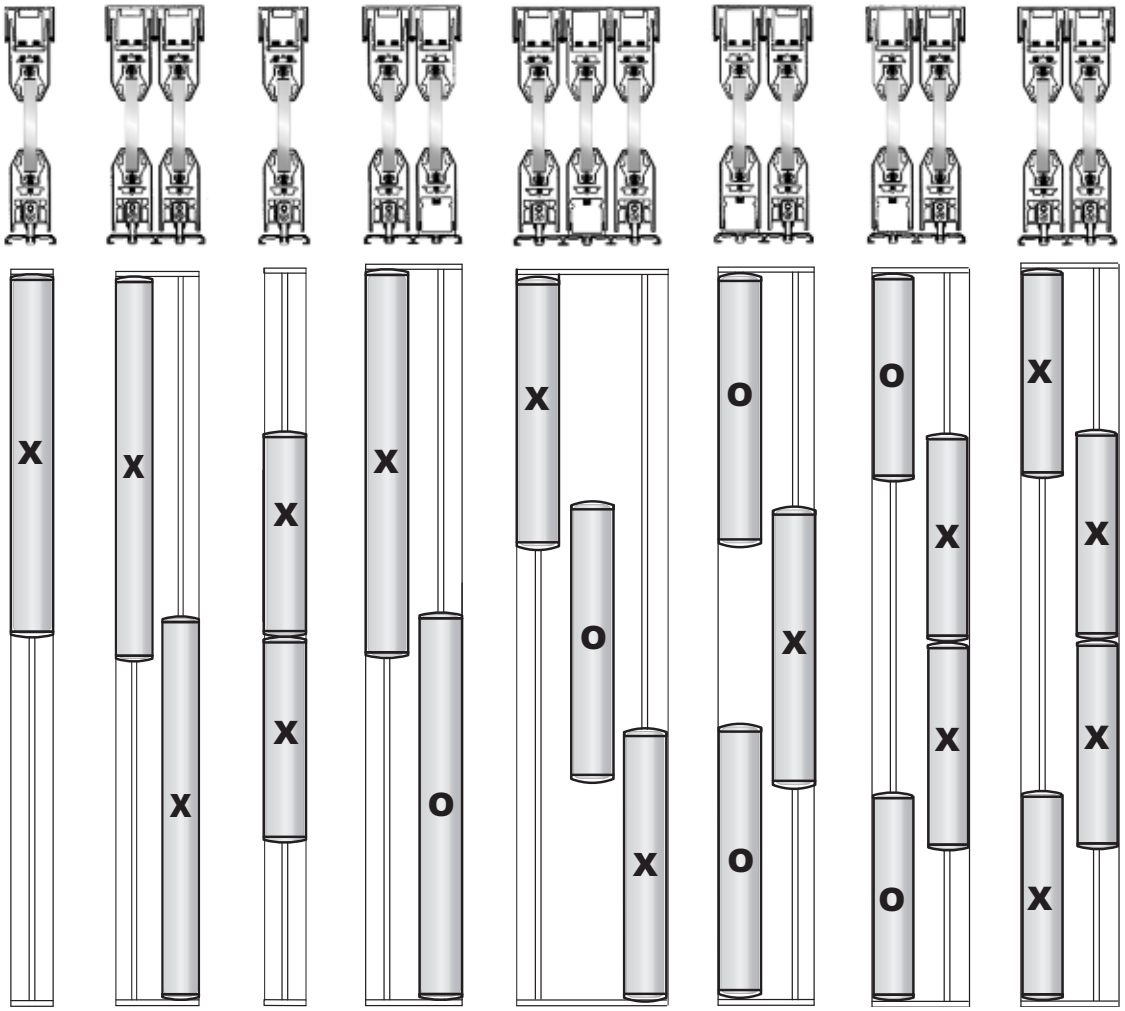

X = Sliding Panel O = Fixed Panel

Online usalum.com By Phone (800) 262-5151 Ext. 7700
Online crlaurence.com By Phone (800) 421-6144 Ext. 7700

'ALL-GLASS' SYSTEMS

CRL SSR Bottom Rolling Sliding Door System

- **Three Rail and Sidelite Combinations for Use With 3/8" or 1/2" (10 or 12) Tempered Glass**
- **Available in Seven Architectural Finishes**

Model SSR
4" (102) Tapered
Bottom Rolling Rail

Model 4SSR
4" (102) Square
Bottom Rolling Rail

Model 6SSR
6" (152) Square
Bottom Rolling Rail

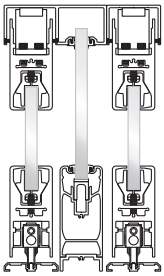

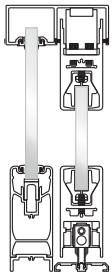

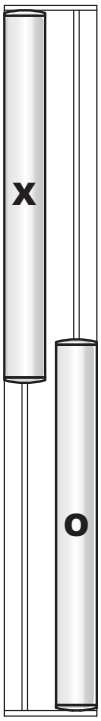

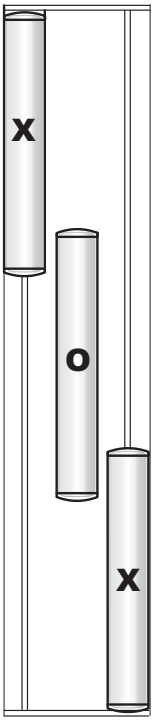

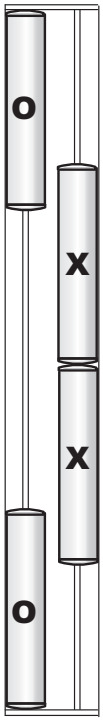

X = Sliding Panel O = Fixed Panel

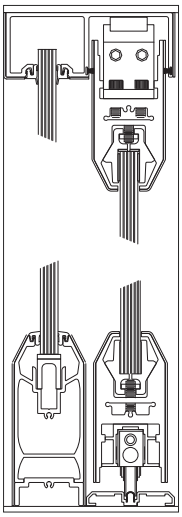

Model SSR

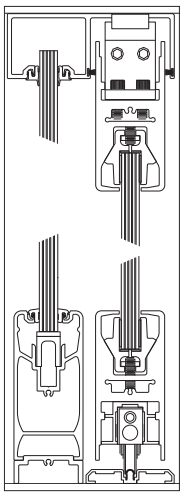

Model 4SSR

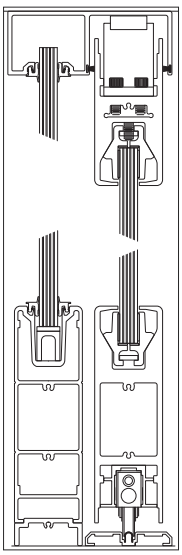

Model 6SSR

'ALL-GLASS' SYSTEMS

CRL Overhead Track Sliding and Bi-Fold Doors

MANUFACTURED IN THE USA BY C.R. LAURENCE
An ISO9001:2008 Certified Company

USE MONOLITHIC TEMPERED GLASS

- **Custom Built in Eight Standard Sliding Configurations and Eight Standard Bi-Fold Configurations**
- **Silent Moving Four-Roller Carriage Assemblies**
- **For Use With 3/8" or 1/2" (10 or 12) Tempered Glass**

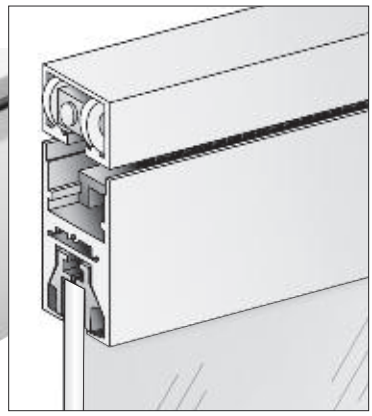

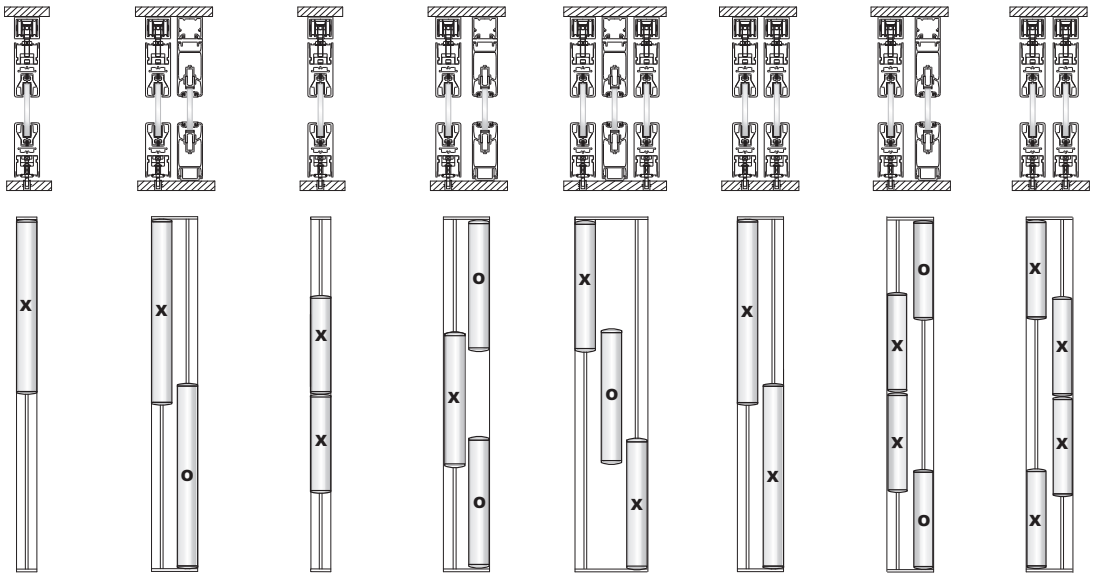

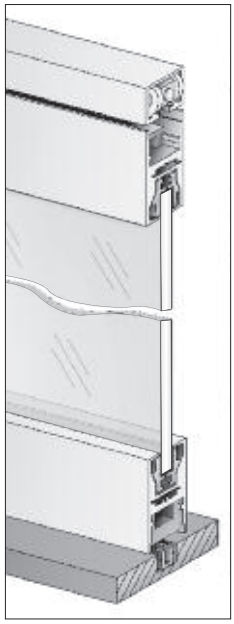

X = Sliding Panel O = Fixed Panel

X	XO (OX) BYPASS	XX BI-PART	OXO BYPASS	XOX BYPASS	XX BYPASS	OXXO BI-PART	XXXX BYPASS
MODEL NO.	MODEL NO.	MODEL NO.	MODEL NO.	MODEL NO.	MODEL NO.	MODEL NO.	MODEL NO.
0TS1	0TS101	0TS2	0TS102	0TS203	0TS22	0TS202	0TS24

Minimum order: 1 each. Must ship common carrier.

- **Available in Six Architectural Finishes**
- **Custom Finishes Available on Special Order**
- **Silent Moving Four-Roller Carriage Assemblies**

The CRL Overhead Track Sliding and Bi-Fold Door Systems are designed to work in a variety of different applications. Their universal track and roller design allows them to be used as Sliding, Half Panel Bi-Fold or Full Panel Bi-Fold configurations. Each unit is custom built to your specifications for opening size, glass thickness, and locking hardware.
NOTE: Available by custom order only. Standard with 4" (102) Square Rails, however, any of our 4", 6", or 10" (102, 152, or 254) Rail combinations are available.

OT Series Carriage Assembly

Online usalum.com By Phone (800) 262-5151 Ext. 7700
Online crlaurence.com By Phone (800) 421-6144 Ext. 7700

'ALL-GLASS' SYSTEMS

CRL Overhead Track Bi-Fold Door Systems

MANUFACTURED IN THE USA BY C.R. LAURENCE
An ISO9001:2008 Certified Company

USE MONOLITHIC TEMPERED GLASS

- **With 4" (101.6) Square DR4S Series Door Rails**
- **Custom Built to Your Specs for Fit and Finish**
- **Available In Six Architectural Finishes**

CRL Overhead Track Bi-Fold Door Systems are available in four configurations, with a maximum of three panels on each side of the opening. The end panels act like normal center pivoting doors and connect to the first hanging panel using special hinged end caps. The hanging panels are joined in the same manner, and are hung from a single Cat. No. 0TCA Carriage Assembly at the panel's end point.

Maximum panel weight not to exceed 170 pounds (77 kg). Maximum panel width is 39" (990). Minimum panel width is 15" (381).

• Panels Hung From Mid-Point, Maximizing Panel Width

2 PANEL HALF LEAF BI-FOLD

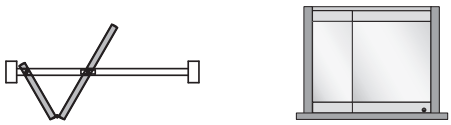

Model No. OTC2

3 PANEL HALF LEAF BI-FOLD

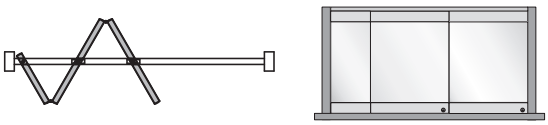

Model No. OTC3

4 PANEL HALF LEAF BI-PART

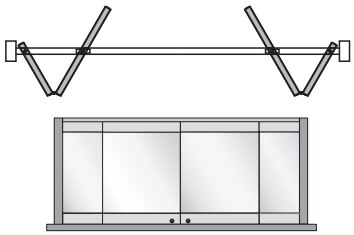

Model No. OTC4

6 PANEL HALF LEAF BI-PART

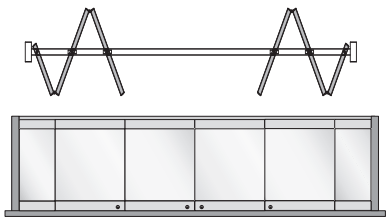

Model No. OTC6

• Panels Hung From End Point, Minimizing Obstruction

2 PANEL FULL LEAF BI-FOLD

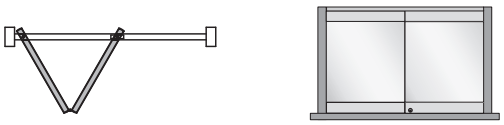

Model No. OTB2

3 PANEL FULL LEAF BI-FOLD

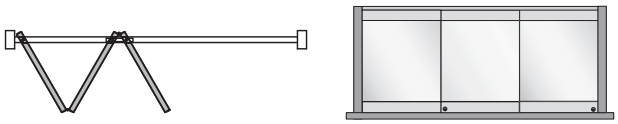

Model No. OTB3

4 PANEL FULL LEAF BI-PART

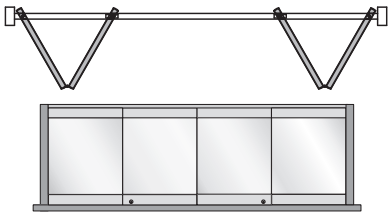

Model No. OTB4

6 PANEL FULL LEAF BI-PART

Model No. OTB6

'ALL-GLASS' SYSTEMS

CRL SPS Stacking Partition System Featuring Intelli-Track™

- Provides the 'All-Glass' Look When Closed and the 'Wide Open' Look When Opened
- Glass Panels Disappear From Sight When Parked in the Parking Closet
- Convertible System Available When a Pivot Door is Required
- A Large Variety of Parking Configurations to Accommodate Almost Any Installation
- Glass Panels Can Be Simply Stacked Against the End Wall or Stored Out of Sight in a Closet

Intelli-Track™ Roller

- Adaptable to a Variety of Panel Types
- Available Locking Floor Bolts and Dustproof Keepers

TYPICAL APPLICATIONS:

- Retail Stores and Malls
- Banquet Halls
- Restaurants and Eateries
- Convention Centers
- Automobile Dealerships
- Stadium Club Boxes
- Reception Areas
- Pool Houses
- Recreation Centers
- Commercial Offices

USE MONOLITHIC TEMPERED GLASS

'ALL-GLASS' SYSTEMS

CRL SPS Stacking Partition System Featuring Intelli-Track™

- Intelli-Track™ Rollers Work With Both Manual and Self-Guiding Intersections to Provide Directional Control and Prevent Accidental Panel Rotation
- Two Rollers Per Panel Will Support 470 Pounds (213 kg)
- Narrow Housing Width Allows for 2-7/8" (73) Center-to-Center Door Rail Spacing in the Parking Area
- Tracks and Intersections Are Available in Mill Aluminum and White Powder Paint (Other Finishes on Special Order)
- A Full Selection of Accessories to Accommodate Most Applications
- In-House Technical Sales Representatives to Assist You in Planning Your Installation

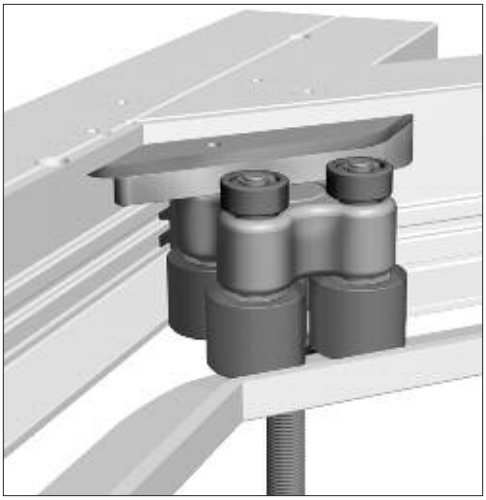

MANUFACTURED IN THE USA BY C.R. LAURENCE
An ISO9001:2008 Certified Company

Top and Bottom Rail Options

- Available in Five Architectural Finishes

TOP RAILS
Tapered and Square

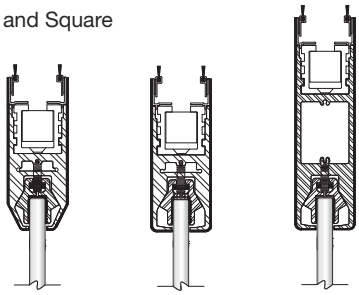

BOTTOM RAILS
Tapered and Square

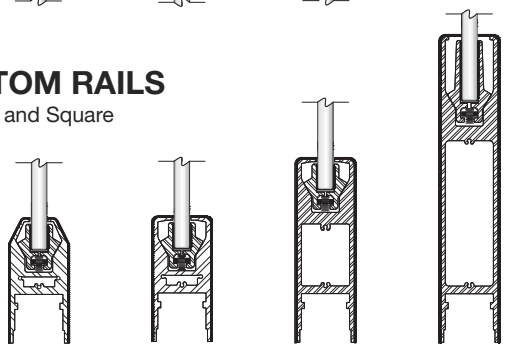

Our UL Classified Deadbolt Handles are a quick and easy way to lock your SPS Doors from a comfortable 36" (914) above the floor.

'ALL-GLASS' SYSTEMS

CRL SPS Stacking Partition System With Convertible Pivoting/Sliding Doors

- SPS Doors Can Now Pivot and Slide
- Fully Adjustable Closing Features
- 6" (152) Rails Top and Bottom
- Available in Five Architectural Finishes
- Custom Finishes Available on Special Order
- Exclusively for Use With 1/2" (12) Tempered Glass

USE MONOLITHIC TEMPERED GLASS

AS EASY AS ONE, TWO, SLIDE!

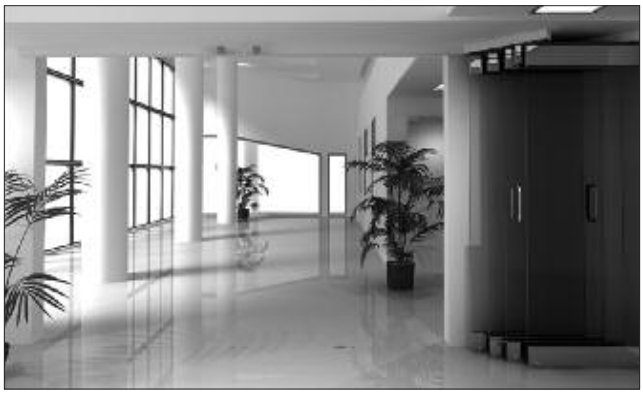

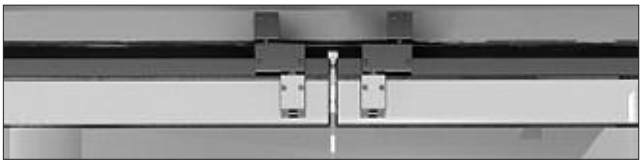

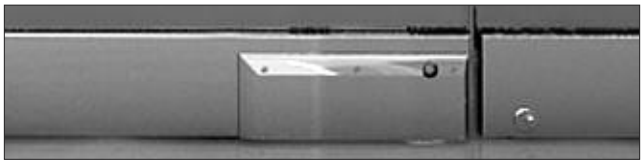

We have done it again! We have taken a great product and have made it even better! Now you can get our popular SPS System with a Convertible Door Option. Convertible doors not only pivot, but they also slide and stack away, giving you the look of a standard pivoting door entrance with the ability to slide and stack away all the panels, even the pivoting doors. Pivoting Doors are easily converted to Sliding Panels and back again by a simple 'one screw' Coordinator at the top of the door, and our fully concealed 'single lever' Closer Engagement Mechanism at the bottom of the door. A heavy-duty floor closer is concealed in the bottom rail of the door, eliminating the unsightly cover plates across the center of the opening when the panels are stacked away.

Online usalum.com By Phone (800) 262-5151 Ext. 7700
Online crlaurence.com By Phone (800) 421-6144 Ext. 7700

'ALL-GLASS' SYSTEMS

CRL Light Duty Stacking Partition System

MANUFACTURED IN THE USA BY C.R. LAURENCE
An ISO9001:2008 Certified Company

- Slide Only or Convertible Options on Any Door
- Free Swinging or With Surface Mounted Closer
- Conversion is Quick and Easy
- Brushed or Polished Stainless Steel Finish

Track Roller

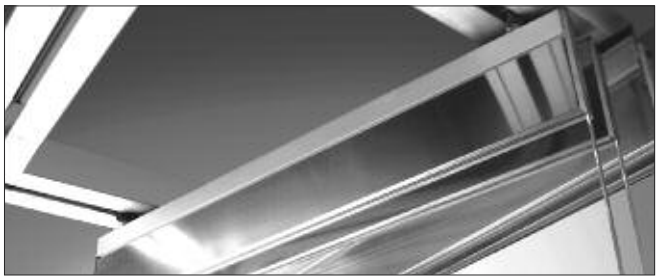

FULL RAIL SYSTEM

- For Use With 1/2" (12) Tempered Glass

USE MONOLITHIC TEMPERED GLASS

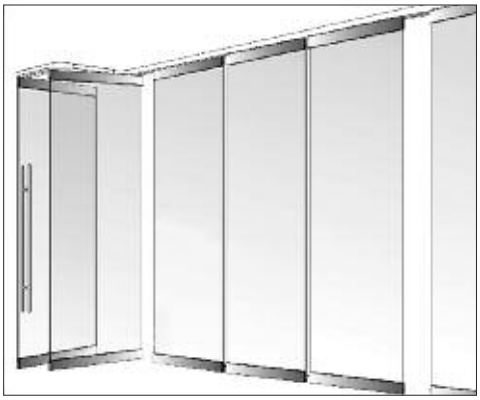

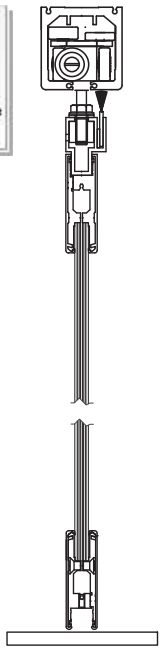

Doors Feature Full Length Rails

PATCH SYSTEM

- Patch Fittings for That 'All-Glass' Look

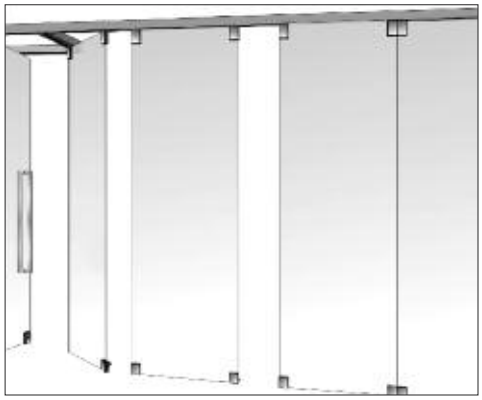

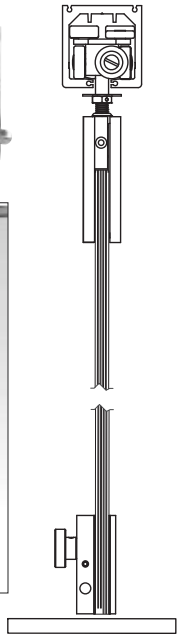

Doors Feature Patch Rails

- Locking Options

Bottom Rail with Cylinder Lock

Bottom Rail with Slide Bolt to Floor Only

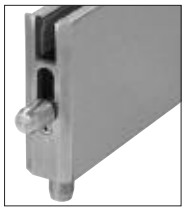

Bottom Rail with Slide Bolt to Floor and Out End

Bottom Rail with Locking Bolt - Out End Only

Bottom Rail with Lock Bolt Receiver

Bottom Rail with Blank End

INTERIOR OFFICE FRONT SYSTEMS

Interior Office Front Systems

- **Create Contemporary Office Space With a Wide Range of Architectural Finishes**
- **Accommodates Glazing Thickness Range of 1/4" to 9/16" (6 to 14)**
- **Screw Spline or Clip Joinery Available**
- **Fabricate On or Off Site**
- **Wrap Walls in Various Depths**
- **Doors and Sidelites Available**

Conference Room Walls

As part of our ever-expanding architectural hardware line, U.S. Aluminum is proud to introduce our latest addition, Interior Office Front Systems.

We have involved all our resources to develop a product line that our customers, architects, and designers will come to trust as a viable solution to their interior office design needs. Use our door and window frames for sidelites to doors, clerestory lites, borrowed lites, or continuous glass walls. A great way to divide interior office space, provide acoustical privacy, all while allowing desirable light to enter the indoor spaces.

U.S. Aluminum offers a variety of Interior Office Front Hardware to make state of the art glazing systems available to the glazing industry. Our commitment to our customers is to carry sufficient inventories of popular stock items, and short lead times for special orders. It is a total program that will allow your entry into the Interior Office Front Systems market.

For additional information, contact U.S. Aluminum Technical Sales at (800) 262-5151 in the U.S. and Canada, and ask for Ext. 5305. You can also email us through our web site at **usalum.com**.

Office Entrances

Hallways

INTERIOR OFFICE FRONT SYSTEMS

Interior Office Front Systems

- Available to Wrap 2-1/4", 3-1/2", 3-3/4", 4-5/8", and 4-7/8" (57, 89, 95, 117, and 124) Walls
- Adjustable Frames Also Available
- Single and Double Door Frames
- Sliding Doors Available
- 24' (7.3 m) Stock Lengths
- Accepts 1/4", 3/8", 1/2", and 9/16" (6 to 14) Glazing
- E.P.D.M. Top Load Glazing Gasket
- Several Trim Profiles Available
- No Exposed Fasteners
- Several Stock Finishes Available, With Custom Finishes on Request

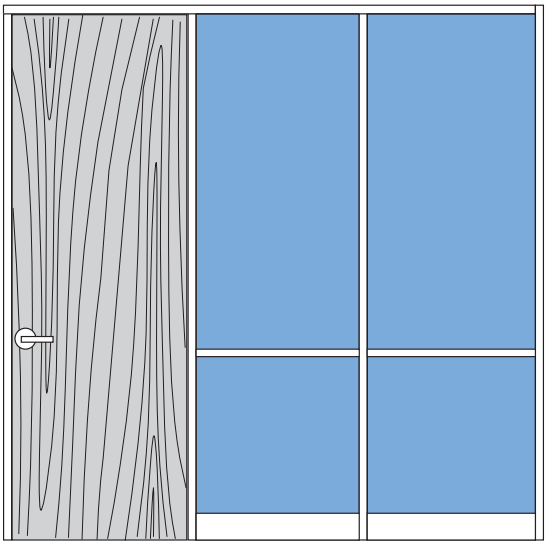

Interior Offices

Office Wall Dividers

Office Fronts

INTERIOR OFFICE FRONT SYSTEMS

Typical Details

Details shown with a 1-1/2" (38) face dimension.
Also available with a 2" (51) face dimension.
Wood door shown, aluminum glazed door optional.
Visit **usalum.com** for details and drawings.

- **Available to Wrap 2-1/4", 3-1/2", 3-3/4", 4-5/8", and 4-7/8" (57, 89, 95, 117, and 124) Walls**

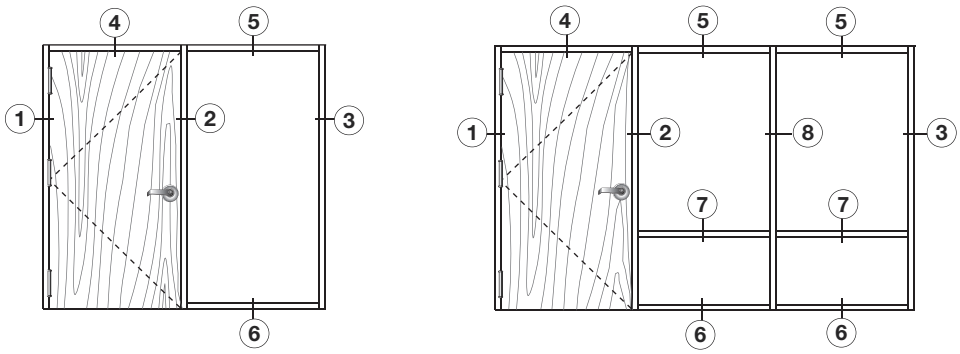

TYPICAL INTERIOR OFFICE FRONT ELEVATIONS

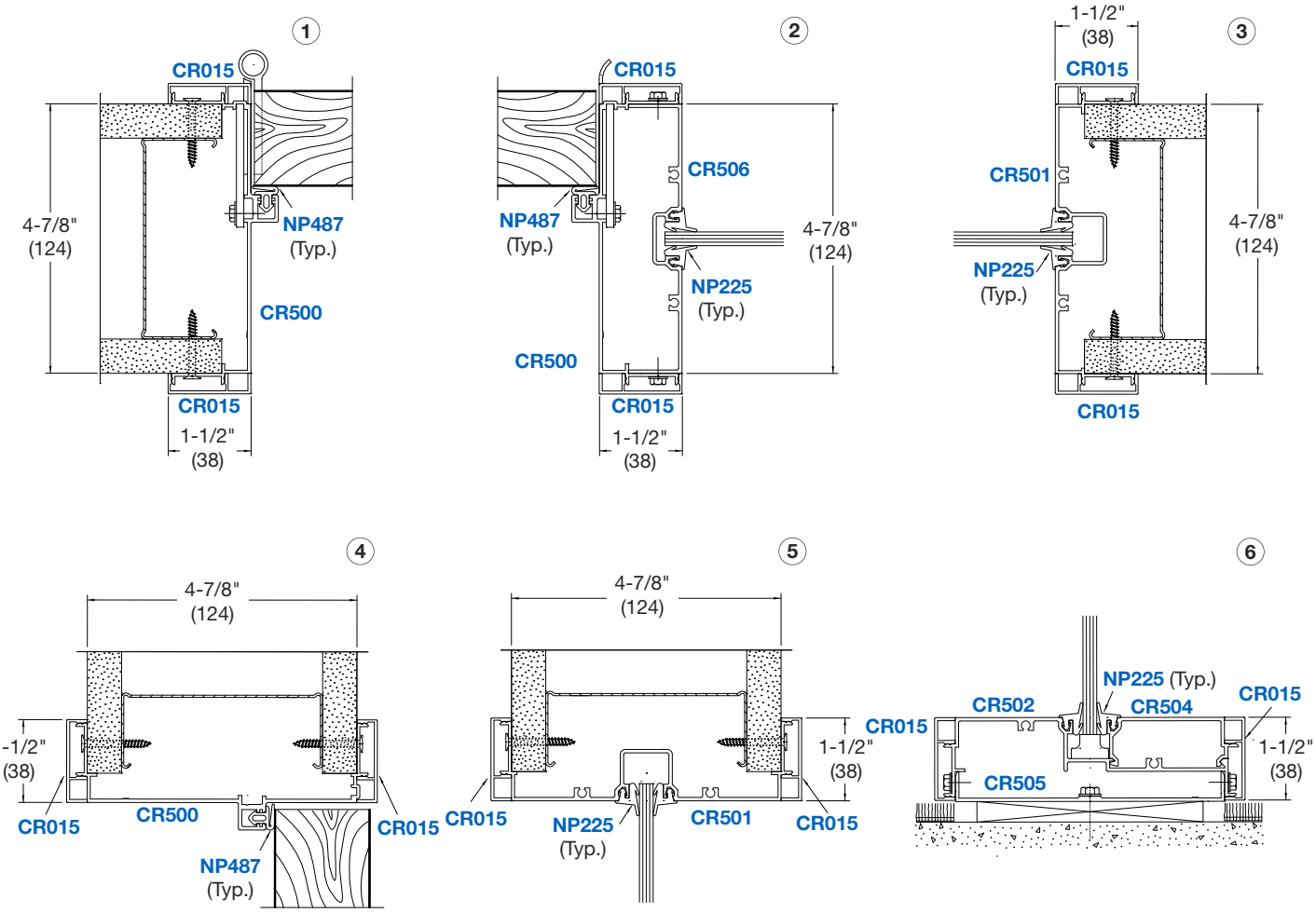

NOT TO SCALE

INTERIOR OFFICE FRONT SYSTEMS

Typical Details

Details shown with a 1-1/2" (38) face dimension.
Also available with a 2" (51) face dimension.
Wood door shown, aluminum glazed door optional.
Visit **usalum.com** for details and drawings.

- **Available to Wrap 2-1/4", 3-1/2", 3-3/4", 4-5/8", and 4-7/8" (57, 89, 95, 117, and 124) Walls**

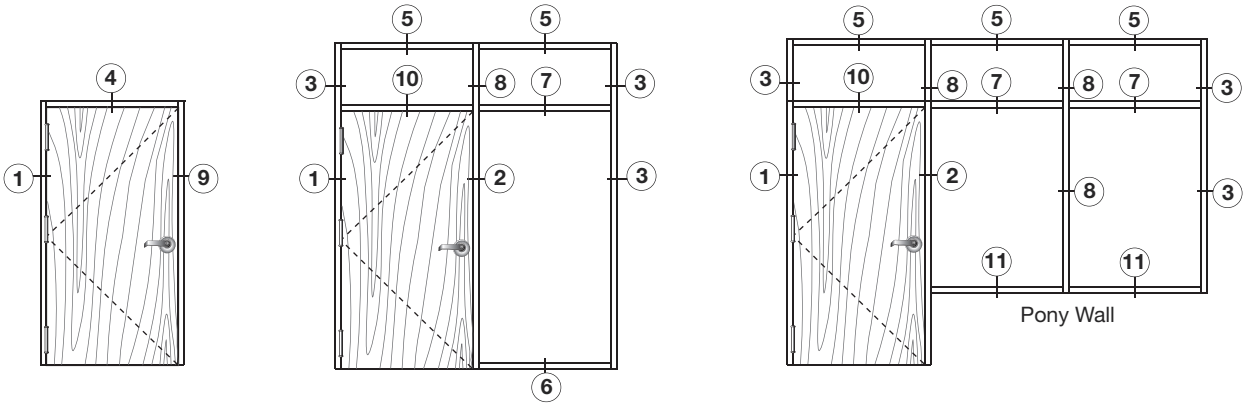

TYPICAL INTERIOR OFFICE FRONT ELEVATIONS

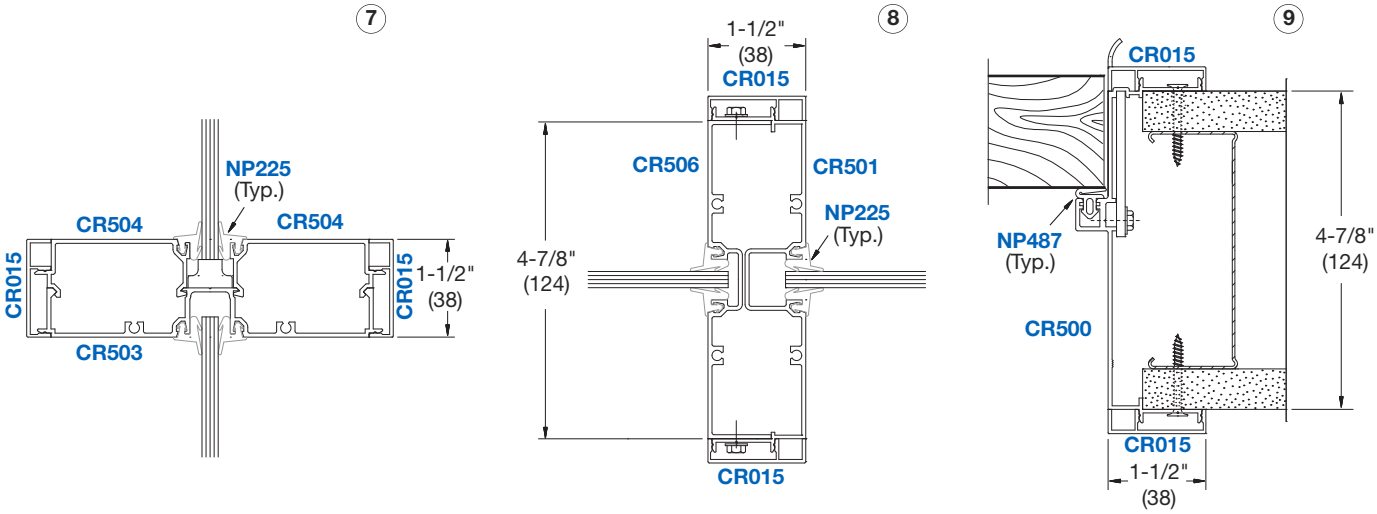

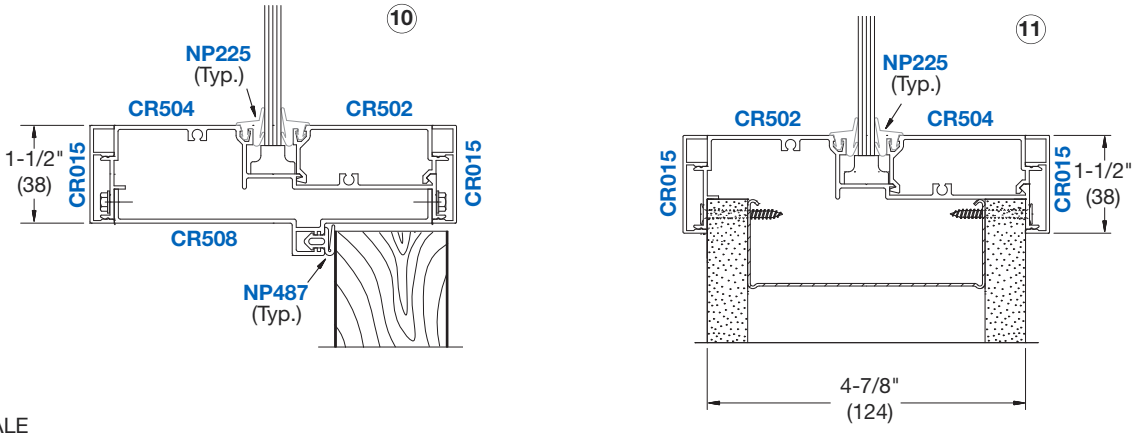

NOT TO SCALE

RAILING SYSTEMS

CAT. NO. HR11

CRL Architectural Railing Systems

- **New Systems for Hand Rails, Guard Rails, Balustrades, Windscreens, and Gates Designed and Engineered for Residential, Commercial, and Institutional Needs**
- **Featuring Our Exclusive TAPER-LOC® 'X' Dry Glazing System for Glass Railings**
- **U.S. Patent No. 8,122,654**

C.R. Laurence manufactures an extensive selection of architectural railing systems and related hardware for the construction of beautiful, code compliant railings and balustrades, including our very popular Aluminum Railing Systems, and our impressive line of windscreens. We've expanded our complete line of Glass Railing Hardware, from Base Shoe to Cap Rails, simplifying your hardware selection process for balustrades, hand rails, and guard rails. We also produce Stainless Steel Post Railing Kits, Wood Cap Rails, and Hand Rails, as well as a line of Swinging Gates.

Our Architectural Railing Systems Catalog features TAPER-LOC® ***'X'***, the dry glazing system for glass railings. TAPER-LOC® ***'X'*** Tapers can be used with monolithic and laminated tempered glass. This innovative system reduces the installation time and mess associated with wet glaze systems.

RAILING SYSTEMS

A Total Program Combining Style With Safety

TAPER-LOC X DRY GLAZE RAILING SYSTEM

U.S. Patent No. 8,122,654

CRL proudly designs and manufactures Architectural Railing Systems for residential, commercial, and institutional needs. It is a comprehensive program that can provide you with Hand Rails, Guard Rails, Balustrades, Windscreens, and Gates that will not only serve their purpose, but will do so in a manner that will add to the aesthetics of the structure into which they are installed.

CRL Architectural Railing Systems combine innovative component design and installation techniques refined by experts in the field of railing technology. Materials used throughout are of the highest quality in a variety of standard architectural finishes.

Our Technical Sales Professionals can help you select and design the Railing System that will best serve your needs. It's a total program that is unmatched by any firm in our industry. For additional information, contact CRL Railing Technical Sales at (800) 421-6144 in the U.S., (877) 421-6144 from Canada, or (323) 588-1281 International, and ask for Ext. 7730. You can also e-mail us through our web site at **crlaurence.com**. From the home page click on Contact Us, and then click on Technical Sales for Railing Products.

GLASS RAILING SYSTEMS

- **Available in Diameters From 1-1/2" to 4" (38 to 102) and Up to Six Stock Finishes**

HAND RAIL SYSTEMS

- **Round and Square Profiles Available in Stainless Steel, Brass, Aluminum, and Wood**

ALUMINUM RAILING SYSTEMS

- **Glass, Picket, Cable, and Custom Systems in a Variety of Colors**

ALUMINUM WINDSCREEN SYSTEMS

- **For Pools and Spas, Patios, Balconies, and Observation Decks**

ARCHITECTURAL METALS

CAT. NO. AM09

CRL Architectural Metals

- Column Covers (Cladding)
- Canopies and Sunshades
- Wall Panel Systems
- Perforated Panel Systems
- 'All-Glass' Entrances and Spider Fittings
- Custom Ornamental Metalwork
- Custom Cladding and Brake Metal
- Architectural Wire Cloth

The CRL Architectural Metals Division offers an extensive selection of architectural systems and related hardware for the construction of beautiful, code compliant building façades, including our very popular 'All-Glass' Systems. We offer Wall Panel Systems, Ceiling Systems, Column Cladding, and Perforated Panel Systems, as well as our rapidly growing line of Sunshades and Canopies. We've expanded our complete line of Glass Awnings, from Tension Rods to Universal Brackets, simplifying your hardware selection process for wall mount, storefront mount, and curtain wall mount applications.

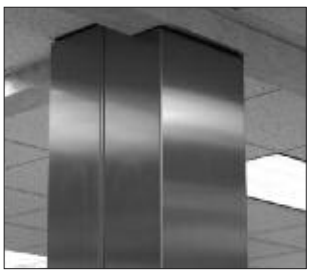

AVAILABLE FINISHES

- US-32 #8 Polished Stainless Steel
- US-32D #4 Satin Stainless Steel
- US-3 Polished Brass
- US-4 Satin Brass
- US-9 464 Polished Bronze
- US-10B Oil Rubbed Bronze*
- US-10 464 Satin Bronze
- US-28 Satin Aluminum Clear Anodized
- Dark Bronze Anodized
- Custom Powder Coated Finishes
- Custom Plated Finishes
- Custom Brushed Finishes

* Finish US-10B (613) is unstable and will vary when applied to different alloys or forms of base metal, and to products of different manufacturers.

FINISH SAMPLES

Finish samples of any of our metal or composite materials are available for color matching or testing. Just contact the CRL Architectural Metals Division with your request.

ARCHITECTURAL METALS

Architectural Metals Designed, Engineered, and Manufactured by C.R. Laurence

- Custom Clad Entrance and Storefront Systems
- Custom Break Shaped Aluminum or Architectural Metals
- Custom Metal Column Covers
- Custom Metal Panel Systems
- Custom Ornamental Metals
- Custom Ornamental Hand Rails and Guard Rails
- Custom Canopies

C.R. Laurence Company fabricates custom metals that are both functionally correct and aesthetically pleasing. We can be involved in all phases of your project, from initial design to delivery, with every step controlled by processes that meet strict ISO standards. Our Los Angeles, California manufacturing staff incorporates fine craftsmanship and experience in the design, fabrication, and finishing of architectural metals.

Some of our work is installed in the finest hotels and retail buildings in North America. You can see examples of it in many commercial and entertainment venues. We're able to be involved in so many projects because we have the versatility to supply what you want, and to do so in a cost-efficient and timely manner.

Custom architectural finishes and textures are always an option, so you won't have to be limited to just a few. We specialize in meeting your requirements.

For more information on custom architectural metals contact CRL Technical Sales at (800) 421-6144 in the U.S., (877) 421-6144 from Canada, or (323) 588-1281 International. Ask for Ext. 7770. You can also send e-mail from the **crlaurence.com** home page. Click on Contact Us, and then click on Technical Sales for Architectural Metals.

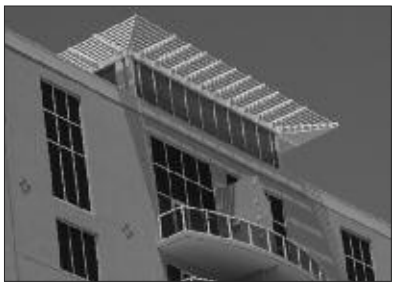

PROTECTIVE SECURITY SCREENS

Guarda™ Protective Security Screens

new GUARDA™ PROTECTIVE SECURITY SCREENS C.R. LAURENCE COMPANY

PROTECTIVE SECURITY SCREEN DOORS, WINDOW SCREENS, AND RAILING SYSTEMS

- **Create a Security Barrier to Help Prevent Unlawful Entry to Home or Business**
- **Provides Energy Savings From Reduced Use of Air Conditioning**
- **Easily Incorporates into General Door and Window Openings**
- **Designed With Multi-Point Locking System**
- **Blocks an Average of 60% of Harmful UV Rays**
- **Black Powder Coated Mesh**

To meet the demands of increased security, CRL is proud to introduce the latest in protective security doors, window screens, and railings. CRL Guarda™ Protective Security Screens are world-class quality products that help protect your family, using only tested and approved hardware to ensure strength, safety, and durability. Guarda™ Protective Security Screen Doors Incorporate multi-point locking systems designed with a simple locking action that meets virtually any job condition and specification requirement for screens.

Before

THE BENEFITS OF GUARDA™ PROTECTIVE SECURITY SCREENS

After

Online usalum.com By Phone (800) 262-5151 Ext. 6180
Online crlaurence.com By Phone (800) 421-6144 Ext. 6180

CRL U.S. ALUMINUM

PROTECTIVE SECURITY SCREENS

Guarda™ Protective Security Screens

new GUARDA™ PROTECTIVE SECURITY SCREENS C.R. LAURENCE COMPANY

PROTECTIVE SECURITY SCREEN DOORS, WINDOW SCREENS, AND RAILING SYSTEMS

- Offers High Resistance to Forced Entry
- Designed to Enhance and Modernize a Building's Architectural Appeal
- Easily Integrates into Storefronts, Curtain Walls, and Railing Systems
- Innovative Design Exceeds International Security Standards
- Seven Standard Aluminum Frame Colors Available

P

PROTECTIVE SECURITY SCREENS

Guarda™ Protective Security Screens

new GUARDA™ PROTECTIVE SECURITY SCREENS

- **Railing Systems are Available in a Full Range of Colors and Styles**
- **Provides Security Without Compromising Views**
- **Passes and Exceeds Salt Spray Testing, Proven Durability to Resist Coastal Environments for Residential and Commercial Applications**

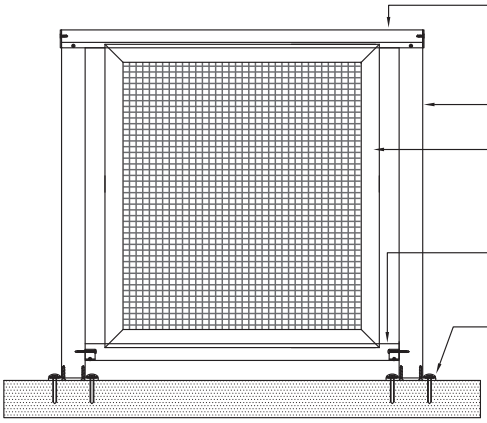

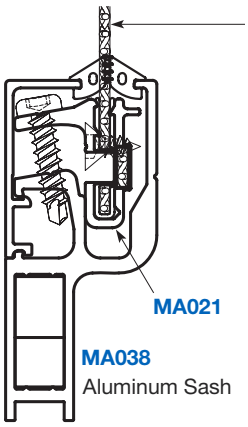

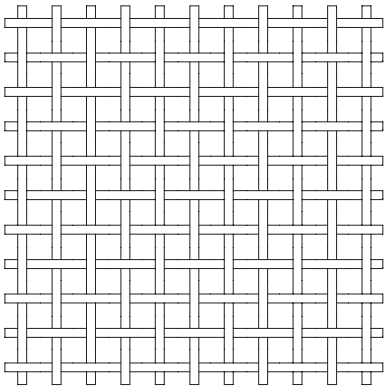

MM001
ISMA 6001-2002
Certified
316 Marine Grade
High-Tensile
Black Powder Coated
Stainless Steel Wire

- **Designed to Easily Install into Our Series 100, 200, 300, 350, and 400 Railing Systems**

P

ALUMINUM SASH

Manufactured with high quality (Grade 6063-T5) aluminum for strength. The Guarda™ Protective Security Screens fixing system is the subject of multiple international patents, and has been specially designed and developed to ensure product strength, integrity, and security.

With multiple frame color options, Guarda™ Protective Security Screens can be incorporated into almost any opening in either new or existing residential or commercial applications. Our innovative system is registered under international patents.

PROTECTIVE SECURITY SCREENS

Typical Details

- Dynamic Impact Test AS 5041-2003
- Knife Shear Test AS 5041-2003
- Jimmy Test AS 5041-2003
- Salt Spray Test ASTM B117

new GUARDA™ PROTECTIVE SECURITY SCREENS C.R. LAURENCE COMPANY

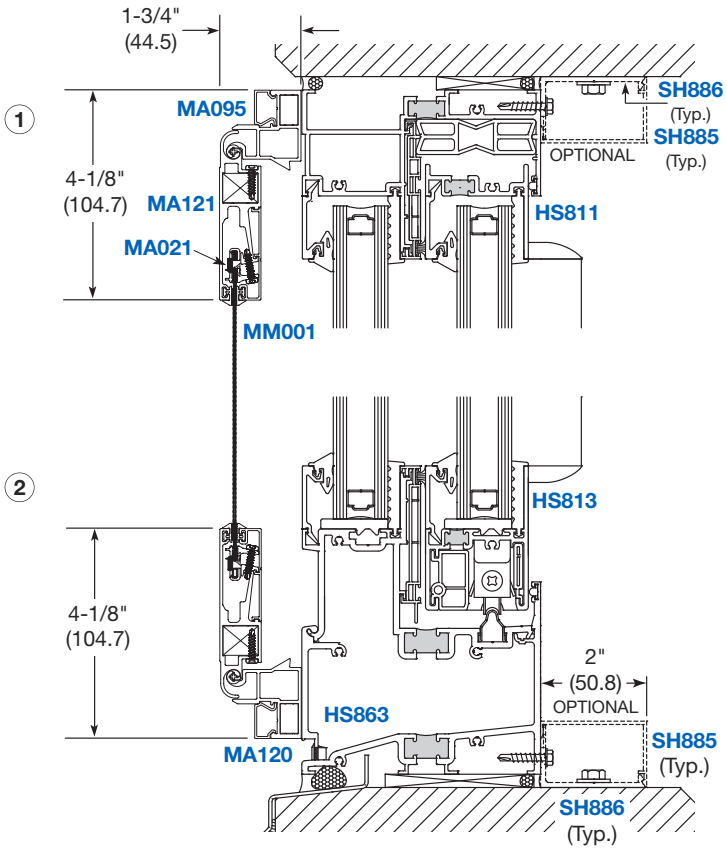

The Quick Escape Casement Screen offers both high level security and quick escape in case of an emergency. Features an easy release push mechanism that also acts as a secure tamper resistant device locking the screen closed.

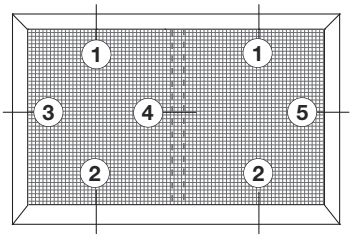

TYPICAL ELEVATION

Quick Escape Casement Screen shown with Series 8200 Horizontal Slider (sold separately). Maximum frame size 96" x 60" (2438 x 1524).

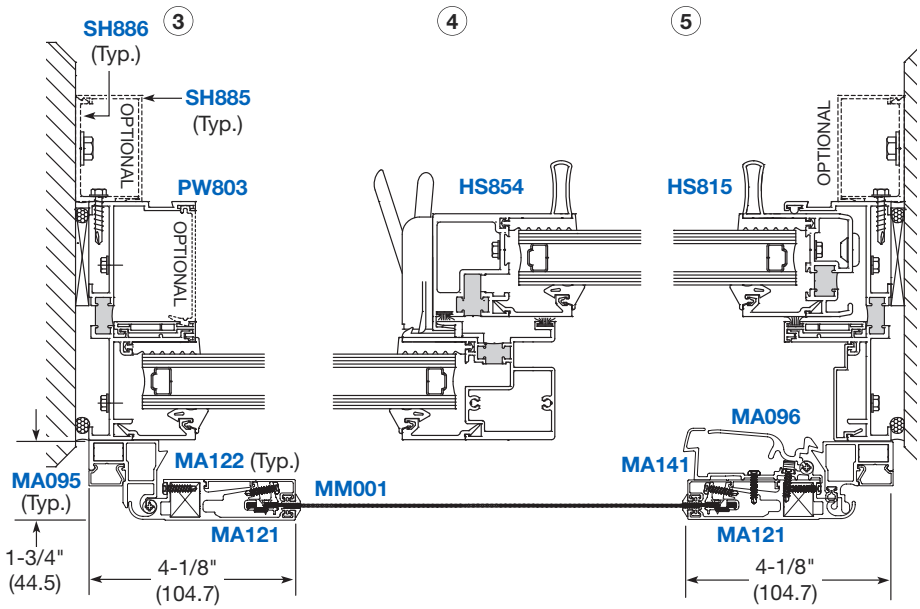

NOT TO SCALE

PROTECTIVE SECURITY SCREENS

Typical Details

new

GUARDA™ PROTECTIVE SECURITY SCREENS C.R. LAURENCE COMPANY

- **ISMA 6001-2002 American National Standard Specification**
- **316 Marine Grade Security Mesh Individually Tested to Exacting Standards**

Quick Escape Project-Out Screen shown with Series 8000 Single Hung Window (sold separately). Maximum frame size 65" x 91" (1151 x 2311).

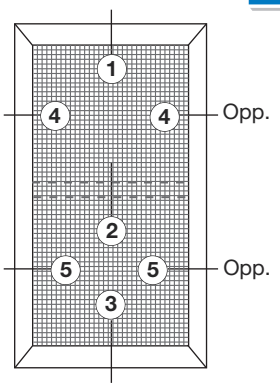

TYPICAL ELEVATION

The Quick Escape Project-Out Screen offers both high level of security and quick escape in case of an emergency. Features an easy release push mechanism that also acts as a secure tamper resistant device locking the screen closed.

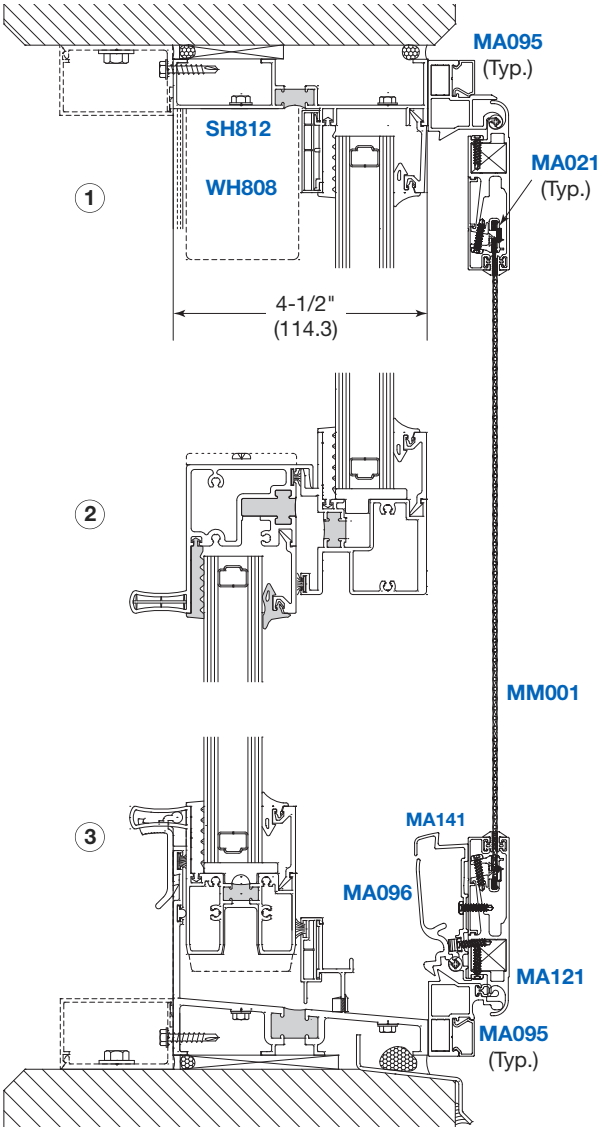

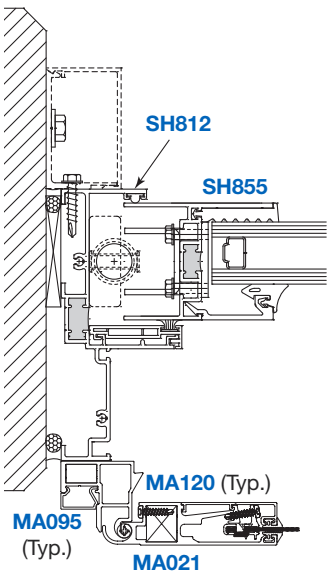

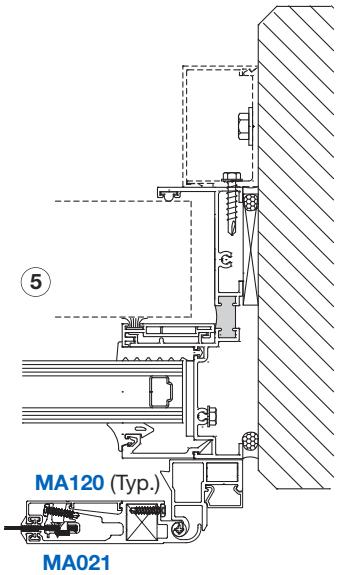

NOT TO SCALE

SCREEN DOORS

Columbia Manufacturing is Now a Member of the C.R. Laurence Family of Companies

C.R. Laurence is very proud to announce the acquisition of Columbia Manufacturing Corp., a well respected name with over 50 years of experience in the screen products industry. We are now operating Columbia through a new entity that is wholly owned by C.R. Laurence Co., Inc.

Columbia's manufacturing plant will continue to operate in Gardena, California, and is now open and ready to provide the same high level of service that you are accustomed to receiving from C.R. Laurence. We will make investments and enhancements in the operation to increase capacity, improve the service level, and upgrade quality, design, and product assortment. Our continuing commitment is to provide a full range of products, literature and technical support to our customers. The complete line of Columbia products is available through your nearest C.R. Laurence Service Center.

SLIDING PATIO SCREEN DOORS

- Patented One-Piece Unitized Construction
- Quickly Adjusts to Opening Height
- Reversible for Left or Right Handed Openings
- Standard Fire Retardant Fiberglass Screen
- White, Gray, and Bronze Finishes in Most Models

STEEL HINGED SCREEN DOORS

- Patented One-Piece Unitized Roll Formed Frame Construction
- 1" Adjustability in Height and Width
- Reversible for Left or Right Handed Openings
- UV Resistant Fire Retardant Fiberglass Screen

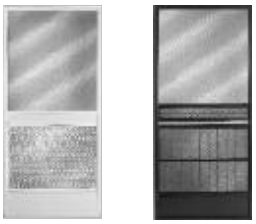

VINYL HINGED SCREEN DOORS

- Low Maintenance Vinyl Frame Never Needs Painting and Will Not Twist, Warp or Sag
- 1" of Height and Width Adjustments
- Reversible for Left or Right Handed Openings
- Fusion Welded Corners for Extra Strength
- All Mounting Hardware Included

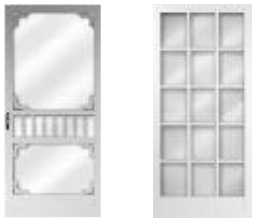

STEEL SECURITY SCREEN DOORS

- Durable Powder Coat White, Black, and Navajo Finishes in Most Models
- Intruder Resistant Full Length Fly Strap
- Double Hole Security Lock Box
- Three Tamperproof Security Butt Hinges

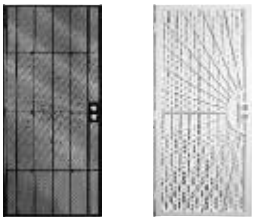

WOOD HINGED SCREEN DOORS

- Mortise and Tenon Solid Construction
- Kiln Dried to Eliminate Warping
- All Joints Sealed With Water Resistant Adhesive
- UV Resistant Fire Retardant Fiberglass Screen
- Reversible for Left or Right Handed Openings

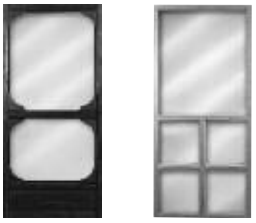

We also offer a selection of accessories and supplementary screen products:

COLUMBIA ACCESSORIES

- K.D. Screen Door Kits for Patio Doors
- Patio Screen Door Pet Grilles
- Adjustable Window Screen Kits
- Roll Formed Window Screen Frame
- Screen Frame Spreader Bar
- Muntin Bar for Insulating Glass Units

FRAMELESS SHOWERS

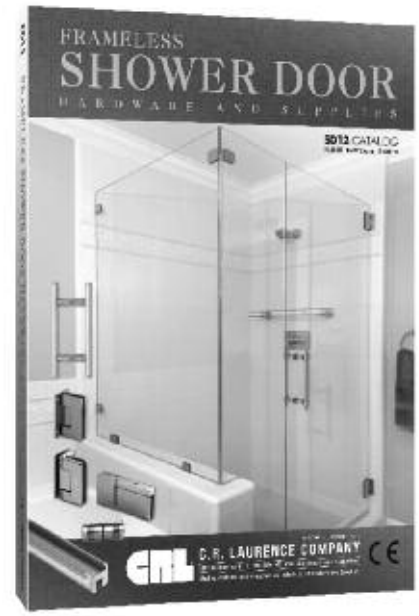

CAT. NO. SD12

CRL Frameless Shower Door Hardware and Supplies

- **Beautiful Architectural Finishes**
- **Unequaled Selection**
- **Huge Inventories**
- **Innovative Solutions**
- **Online Services**
- **Expert Technical Assistance**

C.R. Laurence offers the largest variety of Frameless Shower Door Hardware in the glass industry. Our initial offering of the basic Wall Mount Hinge in just two finishes has evolved over the years to over 25 series of Shower Door Hinges in various configurations and beautiful finishes, plus Door Pulls and Knobs, Towel Bars, Glass Clamps, Headers, U-Channels, Thresholds, Frameless Door Kits, Wipes and Seals, Sliding Shower Door Kits, Bathroom Mirrors, and Decorator Accessories.

Reacting to the "wish list" of designers and installers has brought about many of the new products that are now part of our extensive selection. Unsurpassed quality combined with technical expertise, full inventories, and the willingness to listen has contributed to create our complete package of quality hardware backed by excellent service.

- **CRL Offers Over 25 Varieties of Hinge Series to Accommodate 1/4" to 1/2" (6 to 12) Thick Glass, and Match Most Any Modern Bathroom Décor**

- **A Full Line of Accessories Provide the Finishing Touch to Complement Your Choice of Hinges and Design**

Jamb Mounted Hinge Kits, Pull Handles, Towel Bars, Knobs, Glass Clamps, U-Channel, Headers, Thresholds, Vanity Mirrors, Polycarbonate and Vinyl Wipes and Seals.

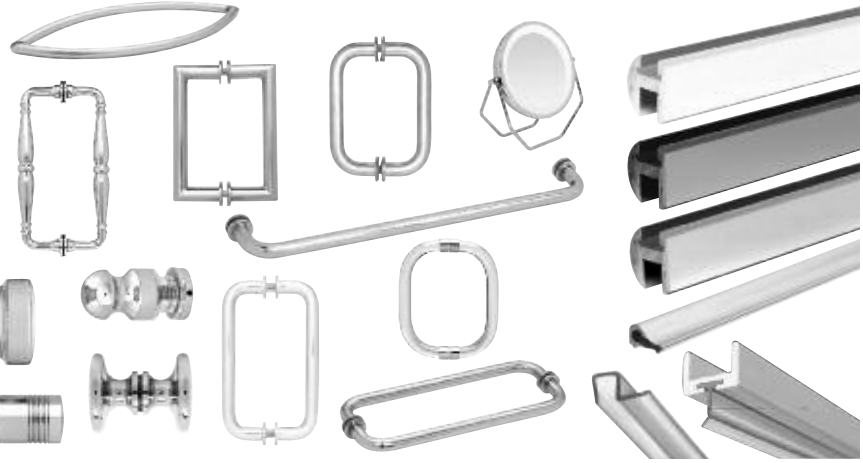

CRL U.S. ALUMINUM

FRAMELESS SHOWERS

Innovative Frameless Systems

COTTAGE SERIES SLIDING SHOWER DOOR KITS

- Clear Polycarbonate or Metal Side Jambs

HYDROSLIDE SLIDING SHOWER DOOR KITS

- Excellent Design for Compact Areas

SERENITY SERIES SLIDING DOOR SYSTEM

- Unique Award-Winning Design Gives an Almost Floating Appearance

FRAMELESS RESTROOM PARTITION SYSTEM

- Custom Built to Your Specifications

FRAMELESS VERTICAL POST SYSTEM

- Innovative Alternative to Header Systems

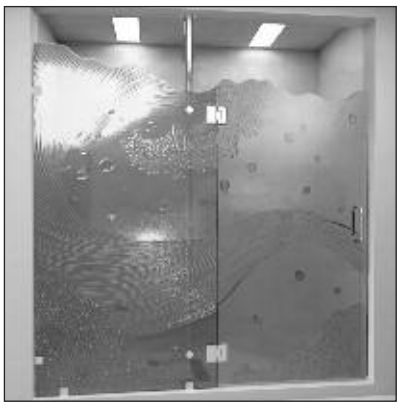

DELUXE SHOWER DOOR HEADER KITS

- Over 15 Beautiful Finishes

GLAZING TOOLS

Sealants

CRL 95C SILICONE BUILDING SEALANT

Get Spec. Data for all Sealants at **crlaurence.com**

10.3 Fl. Oz. (305 ml);
30 Cartridges Per Case;
1440 Cartridges Per Pallet

- **Excellent Primerless Adhesion to Most Common Construction Substrates**
- **± 50% Joint Width Movement**
- **AAMA Approved**
- **Approved for the Florida Hurricane Impact Glazing Code**
- **20 Year Limited Warranty**

CRL 95C Silicone is a one-part, medium modulus, neutral cure, 100% silicone formulation that cures to a durable and flexible silicone rubber building joint seal. It can accommodate ± 50% joint movement in properly designed joints.

NOTE: CRL 95C should not be used for structural glazing; sealing horizontal decks, patios, driveways or terrace joints where abrasion or physical abuse is encountered; sealing submerged joints; or for exterior or interior sealing below the waterline in marine applications.

PART NO.	COLOR
95CBL	Black
95CDBRZ	Dark Bronze
95CGRY	Gray
95CL	Limestone
95CW	Precast White
95CWHT	White

Minimum order: 1 each. All cartridge sealants can be combined for quantity pricing.

DOW CORNING® 795 SILICONE BUILDING SEALANT

- **± 50% Joint Width Movement**
- **Medium Modulus Building Sealant for Expansion Joints**
- **Structural and Non-Structural Glazing of Glass, Metals, and Plastics**

10.3 Fl. Oz. (305 ml);
12 Cartridges Per Case;
1296 Cartridges Per Pallet

Dow Corning® 795 is a one-part, medium modulus, neutral cure silicone formulation. Dow Corning® 795 cures to a durable and flexible silicone rubber building joint seal, and can accommodate ± 50% joint movement in a properly designed joint.

NOTE: Should not be applied to building materials that bleed oils, plasticizers or solvents, or in totally confined spaces. Do not apply to frost-laden or wet surfaces, or to surfaces that are in direct contact with food. Check cartridge label and Specification Data Sheet for additional limitations.

PART NO.	COLOR
795BL	Black
795BRZ	Bronze
795GRY	Gray
795L	Limestone
795W	White

Minimum order: 1 each. All cartridge sealants can be combined for quantity pricing.

DOW CORNING® 995 SILICONE STRUCTURAL ADHESIVE

- **Designed Specifically for Structural and Protective Glazing**
- **Self-Priming to Most Common Building Substrates, Including Most Fluoropolymer-Based Paints**

10.3 Fl. Oz. (305 ml);
12 Cartridges Per Case;
1296 Cartridges Per Pallet

Dow Corning® 995 is a one-component, self-priming, shelf stable, neutral cure, elastomeric adhesive specifically formulated for silicone structural glazing.

NOTE: Structural glazing applications for Dow Corning® 995 must be reviewed by the Technical Service staff, Dow Corning Corporation, Construction Sealants Technical Service and Development. Check cartridge label and Specification Data Sheet for additional limitations.

PART NO.	COLOR
995BL	Black
995W	White

Minimum order: 1 each. All cartridge sealants can be combined for quantity pricing.

CRL U.S. ALUMINUM

GLAZING TOOLS

Backer Rods

OPEN CELL BACKER ROD

- **Controls Depth of Sealant and Acts as a Bond Breaker**
- **Has No Skin, So It's Non-Gassing**
- **Soft So it Compresses Easily**

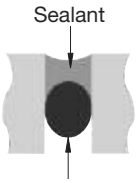

Open Cell Backer Rod is a soft, round, and easily compressible open cell polyurethane foam. Dynamic joint movement does not adversely affect Open Cell Backer Rod, and its inherent flexibility applies itself to joint variations very easily.

100 FOOT (30.5 M) ROLLS

PART NO.	ROD DIAMETER	ROLL LENGTH
B0CBR58C	5/8" (16)	100' (30.5 m)
B0CBR78C	7/8" (22)	100' (30.5 m)
B0CBR118C	1-1/8" (28)	100' (30.5 m)
B0CBR112C	1-1/2" (38)	100' (30.5 m)

Minimum order: 1 case. Sizes can be combined for quantity pricing.

BULK CASES

PART NO.	ROD DIAMETER	QTY/CASE
B0CBR58	5/8" (16)	1400' (426 m)
B0CBR78	7/8" (22)	900' (274 m)
B0CBR118	1-1/8" (28)	350' (107 m)
B0CBR112	1-1/2" (38)	200' (61 m)
B0CBR2	2" (51)	100' (30.5 m)

Minimum order: 1 case. Sizes can be combined for quantity pricing.

Part No. SBRR
Roller Tool will not tear "skin" of Backer Rod.

CLOSED CELL BACKER ROD

- **Compatible With All Cold-Applied Sealants**
- **Available in Nine Widths**

Closed Cell Backer Rod is a round, flexible, closed cell polyethylene foam with an exterior "skin" used as a backing and thickness control device for elastomeric and other cold-applied sealants.

100 FOOT (30.5 M) ROLLS

PART NO.	ROD DIAMETER	ROLL LENGTH
EF14C	1/4" (6)	100' (30.5 m)
EF38C	3/8" (10)	100' (30.5 m)
EF12C	1/2" (12)	100' (30.5 m)
EF58C	5/8" (16)	100' (30.5 m)
EF34C	3/4" (19)	100' (30.5 m)
EF1C	1" (25)	100' (30.5 m)
EF114C	1-1/4" (32)	100' (30.5 m)
EF112C*	1-1/2" (38)	102' (31.1 m)
EF2C*	2" (51)	102' (31.1 m)

Minimum order: 1 roll. Sizes can be combined for quantity pricing.
* This size is shipped in 84" (2.13 m) cut lengths.

BULK CASES

PART NO.	ROD DIAMETER	QTY/CASE
EF14B	1/4" (6)	6400' (1951 m)
EF38B	3/8" (10)	3600' (1097 m)
EF12B	1/2" (12)	2500' (762 m)
EF58B	5/8" (16)	1550' (472 m)
EF34B	3/4" (19)	1100' (335 m)
EF1B	1" (25)	550' (167 m)
EF114B	1-1/4" (32)	400' (122 m)
EF112B*	1-1/2" (38)	552' (168 m)
EF2B*	2" (51)	360' (110 m)

Minimum order: 1 roll. Sizes can be combined for quantity pricing.
* This size is shipped in 84" (2.13 m) cut lengths.

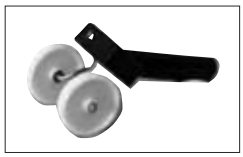

Part No. T607CU605
Backer Rod Insert Tool Set. Helpful for proper installation.

SOF® ROD

- **Non-Gassing if Damaged**
- **No Moisture Absorption**

Sof® Rod is a state-of-the-art sealant backing material combining the best properties of both open and closed cell backer rods in a single, trouble-free product. Sof® Rod is a continuous length of extruded polyolefin foam made with a non-absorbent outer skin and a highly resilient interior network of open and closed cells. Sof® Rod will not out-gas if ruptured.

100 FOOT (30.5 M) ROLLS

PART NO.	ROD DIAMETER	ROLL LENGTH
SR38C	3/8" (10)	100' (30.5 m)
SR58C	5/8" (16)	100' (30.5 m)
SR78C	7/8" (22)	100' (30.5 m)
SR118C	1-1/8" (28)	100' (30.5 m)
SR112C**	1-1/2" (38)	102' (31.1 m)
SR2C**	2" (51)	102' (31.1 m)

Minimum order: 1 roll. **Minimum order: 1 box of seventeen 6-foot lengths.
Sizes can be combined for quantity pricing.

BULK CASES

PART NO.	ROD DIAMETER	QTY/CASE
SR38B	3/8" (10)	3600' (1097 m)
SR58B	5/8" (16)	1550' (472 m)
SR78B	7/8" (22)	850' (259 m)
SR118B	1-1/8" (28)	500' (152 m)
SR112B*	1-1/2" (38)	552' (167 m)
SR2B*	2" (51)	360' (110 m)

Minimum order: 1 roll. *Minimum order: 1 box of 6-foot lengths.
Sizes can be combined for quantity pricing.

GLAZING TOOLS

Shims

SHIMSTACK SHIMS

- **Our Best Selling Shim**
- **Adjustable Size Options Lets You Choose the Desired Thickness From 1/16" to 1"**

Shimstack Shims give you fast, low cost leveling. Sixteen heat-sealed pieces make up one 1" (25.4) stack. Simply snap off individual shims to get the thickness you need. Made of fire resistant, non-staining, black color high-impact plastic with an ASTM rating of 5000 p.s.i. compressive strength.

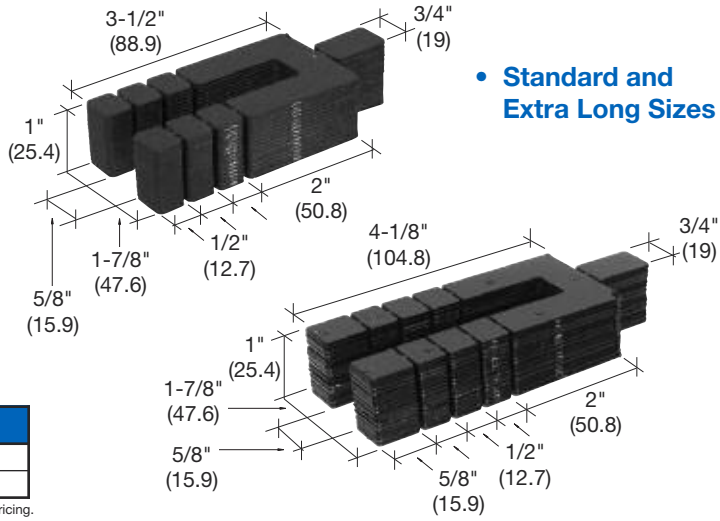

- **Standard and Extra Long Sizes**

PART NO.	THICKNESS	LENGTH
KRS16	1/16" (1.6)	3-1/2" (88.9)
KRS26	1/16" (1.6)	4-1/8" (104.8)

Minimum order: 1000 each. Must be ordered in increments of 1000. Sizes can be combined for quantity pricing.

PLASTIC HORSESHOE SHIMS

- **1/16", 1/8", and 1/4" Thicknesses**
- **Simplifies All Leveling Requirements**

These Plastic Horseshoe Shims are made to simplify leveling problems wherever they occur, and have been approved by architects for use in the installation of windows, doors, curtain walls, storefronts, and insulating glass units. They come in three sizes in three thicknesses, color coded for quick selection.

- **Color Coded for Quick Selection**

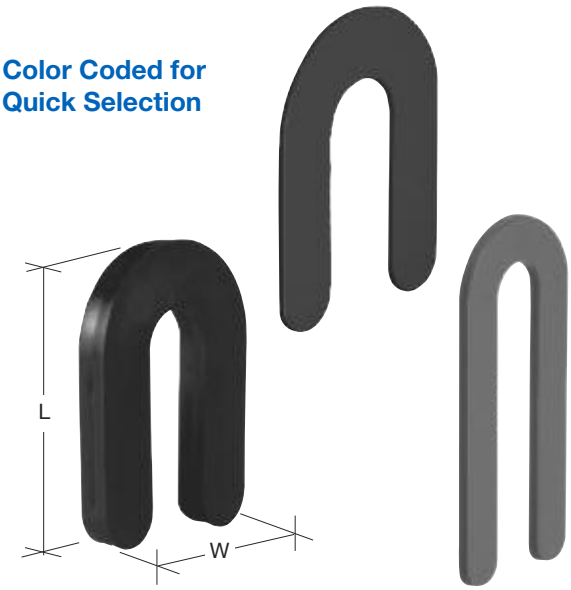

PART NO.	COLOR	THICKNESS	"W" WIDTH	"L" LENGTH
PHS6	Blue	1/16" (1.6)	1-1/2" (38.1)	2" (50.8)
PHS8	Red	1/8" (3.2)	1-1/2" (38.1)	2" (50.8)
PHS4	Black	1/4" (6.3)	1-1/2" (38.1)	2" (50.8)
PHS26	Blue	1/16" (1.6)	2-5/16" (58.7)	3" (76.2)
PHS28	Red	1/8" (3.2)	2-5/16" (58.7)	3" (76.2)
PHS24	Black	1/4" (6.3)	2-5/16" (58.7)	3" (76.2)
PHS16	Blue	1/16" (1.6)	1-1/2" (38.1)	3-1/2" (88.9)
PHS18	Red	1/8" (3.2)	1-1/2" (38.1)	3-1/2" (88.9)
PHS14	Black	1/4" (6.3)	1-1/2" (38.1)	3-1/2" (88.9)

Minimum order: 100 each. Must be ordered in increments of 100. Sizes can be combined for quantity pricing.

JUMBO PLASTIC HORSESHOE SHIMS

- **New Larger 3" x 4" Size Available in Three Thicknesses**
- **High Impact Stryrene**

Jumbo Size Plastic Horseshoe Shims are preferred for use in curtain wall construction and other installations requiring the leveling of larger members. These high impact styrene Shims are molded to a jumbo 3" x 4" (76.2 x 101.6) size in standard thicknesses of 1/4", 1/8" and 1/16" (6.3, 3.2, and 1.6). Precisely sized and balanced for vertical and horizontal installation.

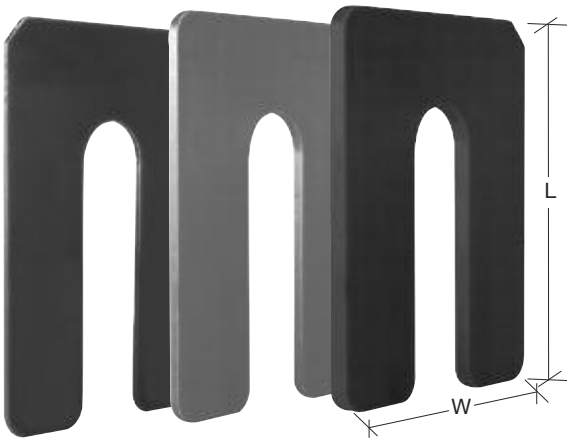

PART NO.	COLOR	THICKNESS	"W" WIDTH	"L" LENGTH
PHS36	Blue	1/16" (1.6)	3" (76.2)	4" (101.6)
PHS38	Red	1/8" (3.2)	3" (76.2)	4" (101.6)
PHS34	Black	1/4" (6.3)	3" (76.2)	4" (101.6)

Minimum order: 100 each. Must be ordered in increments of 100. Sizes can be combined for quantity pricing.

CRL U.S. ALUMINUM

GLAZING TOOLS

Glazing Gaskets for Curtain Walls

FOR GLAZING INFILLS 1/4" (6) TO 2" (51)

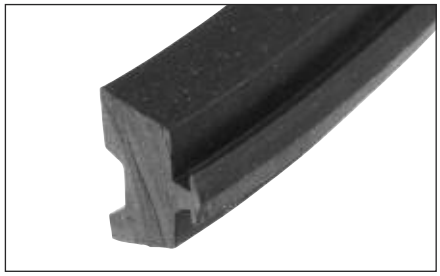

PART NO.	COLOR	TYPE	ROLL LENGTH
NP430	Black	Exterior	250' (76.2 m)

Minimum order: 1 roll.

NP420

SP450

PART NO.	COLOR	TYPE	ROLL LENGTH
NP420	Black	Exterior	250' (76.2 m)
SP450	Black	Exterior	250' (76.2 m)

Minimum order: 1 roll.

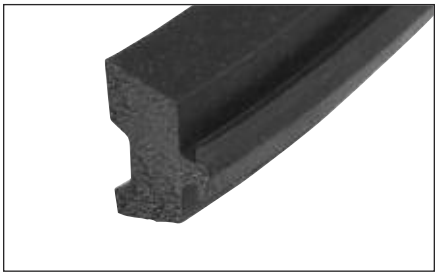

PART NO.	COLOR	TYPE	ROLL LENGTH
NP425	Black	Exterior	300' (91.4 m)

Minimum order: 1 roll.

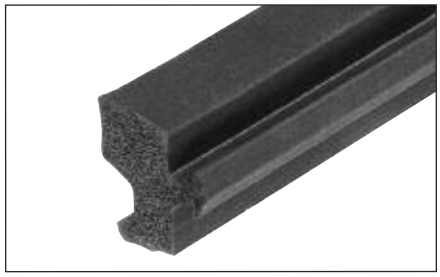

PART NO.	COLOR	TYPE	ROLL LENGTH
NP421	Black	Interior	500' (152.4 m)

Minimum order: 1 roll.

PART NO.	COLOR	TYPE	ROLL LENGTH
NP606	Black	Interior	200' (61 m)

Minimum order: 1 roll.

PART NO.	COLOR	TYPE	ROLL LENGTH
NP432	Black	Exterior	500' (152.4 m)

Minimum order: 1 roll.

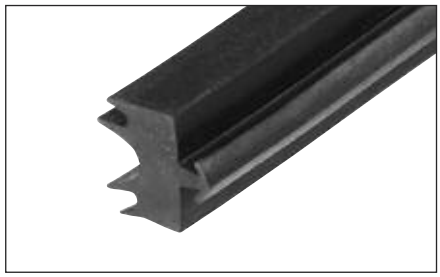

PART NO.	COLOR	TYPE	ROLL LENGTH
NP726	Black	Exterior	250' (76.2 m)

Minimum order: 1 roll.

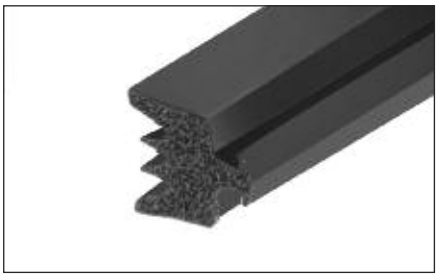

PART NO.	COLOR	TYPE	ROLL LENGTH
NP716	Black	Interior	500' (152.4 m)

Minimum order: 1 roll.

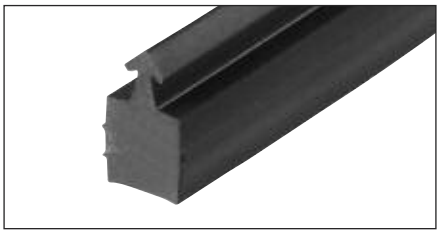

PART NO.	COLOR	TYPE	ROLL LENGTH
SP250	Black	Spacer Structural Glaze	250' (76.2 m)

Minimum order: 1 roll.

P

Adjustable Multi-Cutter Tool

- Makes Precise Straight or Miter Cuts in Gaskets
- Adjustable Guide Block

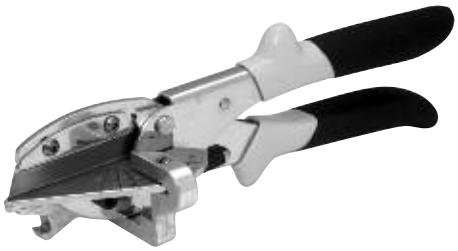

PART NO.	DESCRIPTION
MC80N	Multi-Cutter
MC80RB	Pack of 5 Blades

Minimum order: 1 each or 1 pack.

GLAZING TOOLS

CRL Accufab Pro Curtain Wall Tool

new

- **For Attaching Head, Sill, and Intermediate Shear Blocks to Curtain Wall, Storefront, and Window Wall Vertical Mullions**
- **Cuts Fabrication Times in Half**
- **Pneumatic Clamping System**
- **Just Set Jig Guides and Go to Work**
- **Custom Sizes and Jig Guides Available**
- **U.S. Patent No. 8,176,610 B1**

The CRL Accufab Pro Curtain Wall Tool has a wide variety of uses to make fabricating curtain wall, storefront, and other similar extrusions simple, and efficient. Fabrication time on installing horizontal shear blocks to the vertical mullions is cut by 50 percent. The work station comes with a 24 foot long tape with measurements in increments of 1/16 inch, making all your markings accurate and precise.

For assistance and more information on the CRL Accufab Pro Curtain Wall Tool, contact us toll free at (800) 262-5151 from anywhere in the United States and Canada. You can also contact us through our web site at **usalum.com**.

PART NO. ACU1

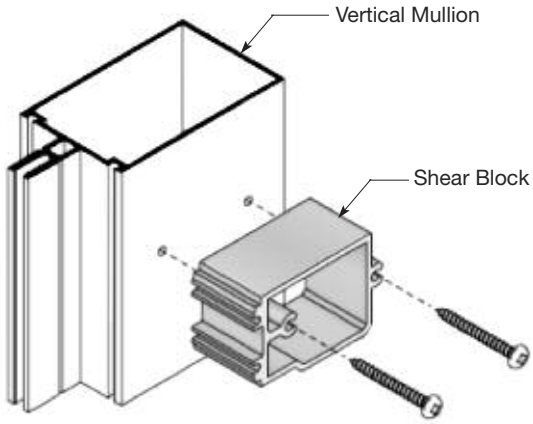

1. With the pneumatic clamping system on, set the jigs to their proper locations and begin fastening Shear Blocks to one side of the Curtain Wall's Vertical Mullion. Proceed down the Vertical Mullion until all Shear Blocks are installed.

2. Release the pneumatic clamping system and flip up the jigs.

3. Turn the vertical mullion on its opposite side.

GLAZING TOOLS

CRL Accufab Pro Curtain Wall Tool

new

4. Gently lay the vertical mullion with the newly installed Shear Blocks facing downwards.

5. Engage the pneumatic clamping system.

6. Flip down the jigs and begin to install Shear Blocks on the reverse side.

7. Proceed down the Vertical Mullion until all Shear Blocks are installed.

8. Release the pneumatic clamping system.

9. Your Curtain Wall Vertical Mullion is fabricated and ready to receive the Horizontal Mullions.

GLAZING TOOLS

Glass Surface Restoration

CRL GLASS SCRATCH REMOVAL SYSTEM

- **Portable, Stand Alone System Works on All Types of Glass**
- **One-Step Process Produces Distortion-Free Results**
- **Non-Abrasive Compound**
- **Integrated Water Feed System**

The CRL Glass Scratch Removal System removes scratches from all types of glass including tempered, annealed, laminated, Low-e, mirrors, curved windshields, back and side windows. You can use this portable system to remove scratches, water scale, acid etching, paint over-spray, and other imperfections quickly and effectively.

This unique system combines thermal energy (heat), chemical reaction (polishing compound), and mechanical energy (force) to effectively eliminate scratches from glass without the use of fixed abrasives.

The CRL Glass Scratch Removal System can be integrated into your everyday operations. Whether you are a door and window manufacturer, a distributor, or install storefronts and curtain walls, the CRL Glass Scratch Removal System can save you money, directly impacting your bottom line. These potential savings come from reduced down time for glass replacement thus keeping projects on schedule, and by reducing glass waste and scrap ratios.

The complete SRS1 Glass Scratch Removal Kit includes: 110V AC 4500 RPM Polisher, .55 lbs (.250 kg) of Polishing Compound, one 2" (51) Backer Pad, one package of 2" (51) Polishing Disks, one 3" (76) Backer Pad, one package of 3" (76) Polishing Disks, one Pressurized Water Feed Attachment, one Inspection Light/IR Thermometer, Safety Glasses, two Respirator Masks, one Mixing Container, one Spatula, one Wrench, one Manual Spray Bottle, Ear Plugs, one Cleaning Brush, one detailed Training and User Manual, and one foam padded lockable Carrying Case.

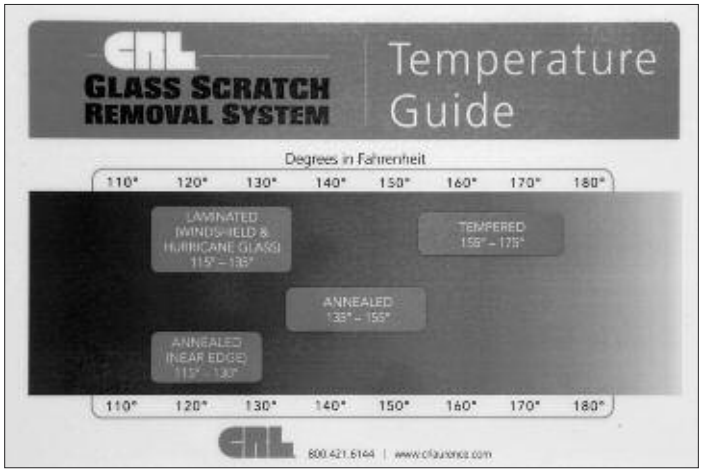

COMPLETE KIT AND INDIVIDUAL COMPONENTS

PART NO.	DESCRIPTION
SRS1	Complete Scratch Removal Kit, 110 Volt AC
EUSRS1	Complete Scratch Removal Kit, 220 Volt AC, 50Hz
SRS1PC	Polishing Compound, 0.55 lbs (.250 kg), 2/pk
SRSVPD2	2" (51) Velcro Back Polishing Disks, 3/pkg
SRSVPD3	3" (76) Velcro Back Polishing Disks, 3/pkg
SRSVPD4	4" (102) Velcro Back Polishing Disks, 3/pkg
SRSPSA6	6" (152) PSA Back Polishing Disks, 3/pkg
SRSVPB2	2" (51) Velcro Backer Pad
SRSVPB3	3" (76) Velcro Backer Pad
SRSVPB4	4" (102) Velcro Backer Pad
SRSPSB6	6" (152) PSA Backer Pad

Minimum order: 1 each or 1 pack.

GLAZING TOOLS

Glass Surface Restoration

SCRATCH-A-WAY® SCRATCH REMOVAL SYSTEM

- **Clean Working System for Light Scratches or Scuff Marks**
- **Flexible Rubber Shroud Keeps Slurry Contained – No Overspray!**
- **Remove Light Scratches Quickly**
- **Insulating Glass – Fix In-Shop or On-Site Scratches**

SCRATCH-A-WAY® ELECTRIC POWERED TOOL KIT

110V or 220V/150 Watts
RPM: 5000 to 9500

KIT CONTAINS: Electrical Tool, Diagnostic Inspection Tool, Five Polishing Discs, Marking Pen, Red Chamois, Instructional CD with Manual, and Plastic Case.

PART NO.	DESCRIPITON
S965020	110 Volt Scratch-A-Way® Kit
1523	220 Volt Scratch-A-Way® Kit

Minimum order: 1 each.

SCRATCH-A-WAY® ACCESSORIES

DIAGNOSTIC INSPECTION TOOL

- **Inspect Depth and Width of Scratches**
- **Inspect Bevels and Edgework in Post Fabrication Process**

PART NO. S93085

The Diagnostic Inspection Tool magnifies the surface image 30 times. The left section of the tool is illuminated so that the scratch can be viewed clearly. The rotary wheel adjusts the focus of the scratch area.

CERIUM OXIDE DISCS

PART NO. S93054

Cerium Oxide Polishing Discs are 2" (50) in diameter, and have an estimated work life of approximately twenty scratches that are 2" (50) long.

PART NO. S93075

PART NO.	DESCRIPITON
S93085	Diagnostic Inspection Tool
S93054	Cerium Oxide Polishing Disc
S93075	Cerium Oxide Polishing Disc

Minimum order: 1 each.

TWO TYPES OF SCRATCHES...

LIGHT SURFACE or SCUFF MARK SCRATCH – Over 95% of all scratches are light scratches or scuff marks. This magnified image above shows a light scratch. This scratch can be removed.

HEAVY/DEEP SCRATCH – Above is a magnified image of a heavy/deep scratch. It cannot be removed with this system.

SCRATCH-A-WAY® AIR POWERED TOOL KIT

KIT CONTAINS:
Air Powered Tool, Diagnostic Inspection Tool, Ten Polishing Discs, Oil, Marking Pen, Red Chamois, Instructional CD with Manual, and Plastic Case. Minimum order is one each.

Air Requirement:
8cfm 90 PSI

PART NO. 1523A

FOR LIGHT SCRATCH AND SCUFF MARK REMOVAL

After cleaning the glass thoroughly, inspect the area with the Diagnostic Inspection Tool. Mark the scratch area from the underside with the red marking pen.

Work the polishing head, very slowly, with consistent pressure for 30 seconds, and then stop. Inspect the progress of your work. Repeat until scratch is removed.

P

GLAZING TOOLS

Stain Removers

BIO-CLEAN WATER STAIN REMOVER

- **Effectively Removes Water and Mineral Stains, Rust, Tree Sap, Paint Overspray, Soap Scum, and Mildew From Glass and Other Surfaces**
- **Works Great On: Windows, Glass Surfaces, Tile, Fiberglass, Chrome, Anodized Brass and Aluminum, and Stainless Steel**

Bio-Clean is a professional strength cleaner recommended by both glazing contractors and professional window cleaning companies. **NOTE:** Do not use on surfaces that can be harmed by the use of a mild abrasive.

PART NO.	CONTENTS	QTY/CASE
WSR1	16 Fl. Oz. (473 ml)	12
WSR1P	5 Pouches	1

Minimum order: 1 each of WSR1 and 1 pack of WSR1P.

- **Removes Stage One Corrosion Quickly**

Stage One Corrosion is defined as glass with light corrosion, and little or no damage to the glass. Stage Two Corrosion occurs when the deposits are no longer on the surface of the glass, but have started to break down the molecular structure of the glass, leaving an etched or white haze on the glass after the stain has been removed. CRL Bio-Clean Water Stain Remover will not repair glass with Stage Two Corrosion.

WATER SPOT REMOVER

- **Solves the Problem of Water Spotting From Sprinklers, Hard Water Sources, and Exposure to Acid Rain**
- **Removes Alkaline Residue, Chemical and Mineral Deposits From Uncoated Clear and Float Glass Surfaces (Typical Stage One Corrosion)**

PART NO.	CONTENTS	QTY/CASE
C2020	1 Gallon (3.785 l)	4
C2030	1 Quart (946 ml)	12

Minimum order: 1 each.

Water Spot Remover is specifically formulated for use by professional window cleaning contractors and glazing professionals. It is designed to remove any residue left on glass which may alter the optical clarity, and cannot be cleaned using standard methods.

"SPARKLE" CLEANER AND STAIN REMOVER

- **Cleans Light Water Stains From Glass Caused by Weather, Sea Air, and Pollution**
- **A Longtime Favorite**

PART NO.	CONTENTS	QTY/CASE
SP101	8 Fl. Oz. (236 ml)	12

Minimum order: 1 each.

"Sparkle" Cleaner does those glass cleaning jobs too tough for spray-on cleaners. It removes light water spots and stains in glass caused by weather, sea air, or pollution. Wipe on with a damp cloth or paper towel, rub stained areas, then wipe off.

A-MAZ WATER STAIN REMOVER

- **Removes the Toughest Stains**
- **Contains No Acids, Bleach, or Chlorides**
- **Includes Nylon Scrub Pad**

A-Maz Water Stain Remover removes the toughest stains on glass, chrome, porcelain, fiberglass, metal, tile - water stains, mineral deposits, and sealant stains.

PART NO.	CONTENTS	QTY/CASE
3379520	14 Fl. Oz. (396 ml)	6

Minimum order: 1 each.

GLAZING TOOLS

Cleaning Products and Supplies

One of our fastest growing product lines has been our Cleaning Products. We have always specialized in glass cleaning products with the industry favorite being our 1973 Glass Cleaner. And because of our alliance with Sprayway, we are able to offer you even more high quality glass cleaning products, as well as other specialty products for all types of cleaning needs. Available in aerosol and liquid forms, they tackle your toughest applications from cleaning glass, plastics, and metal, to removing graffiti, greases, oils, sealants, adhesives, and even cleaning your hands. Visit **crlaurence.com** for more information.

Glass Cleaners

- Ammoniated Aerosol Formulas
- Non-Ammoniated Aerosol Formulas
- Private and Logo Labels
- Glass Washing Machine Detergents

Concentrated Glass Cleaners, Stain Removers, and Protectants

- Concentrated Liquid Glass Cleaner
- Ready-Mix Glass and Mirror Cleaners
- Stain Removers
- Surface Protectors

Plastic Cleaners

- Aerosol Plastic Cleaners
- Liquid Plastic Cleaners

All Purpose Cleaners

- Multi-Surface Cleaners
- Stone Countertop Cleaners
- Anti-Fog Spray and Dust Remover
- Solvent Adhesive Removers and Cleaners

Metal and General Purpose Cleaners

- Stainless Steel Polish and Cleaners
- Armor All® Protectant
- Metal Cleaners
- Rust Treatment

Wipes, Towels, and Rags

- Lint Free Shop Wipes
- Scott Paper Towel Rolls
- Kimberly-Clark® Towels
- Micro-Fiber Wipes
- Box of Rags

Hand Cleaners

- Organic Formula
- Orange Formula With Grit
- Wipes in a Bucket With Urethane and Grease Removers

Cleaning Accessories

- Razor Blades and Scrapers
- Coveralls and Shoe Covers
- Steel Wool and Scotch Brite® Pads
- Vehicle Interior Protection

Window Washing Tools

- Squeegees
- Extension Poles
- Window Cleaning Soaps

GLOSSARY

Common Terms

A

AAMA - American Architectural Manufacturers Association is a trade association of firms engaged in the manufacture and sale of architectural building components and related products.
Active Door (or Leaf) - Usually the first operating leaf in a door having a pair of leaves; the leaf to which the latching or locking mechanism is attached.
Adjustable Astragal - An integral component with weatherstripping located within the inactive meeting stile on pairs of doors which can be adjusted to close the clearance gap for weathering purposes.
AIA - American Institute of Architects.
Air Leakage - The volume of air which flows through a closed window or door in a given length of time as a result of the difference in air pressure on its opposite faces.
Allowable Stress - The maximum unit stress permitted under working loads by codes and specifications.
Aluminum Door - A door having aluminum stiles and rails; usually glazed.
Anodic Coating - The surface finish resulting from anodizing. Coatings may be produced by clear, integral color or electrolytically deposited color processes. Also see Anodize.
Anodize - A method of coating, coloring and finishing aluminum that both protects and beautifies the aluminum.
ANSI - American National Standards Institute is an independent association of trade organizations, technical societies, professional groups and consumer organizations which establishes and publishes standards at the national level.
Anti-Walk Blocks - See Edge Blocks.
ASCE - American Society of Civil Engineers.
ASTM - American Society for Testing and Materials. A nonprofit organization that establishes standard tests and specifications for construction materials; such tests and specifications usually are referred to by the abbreviation ASTM followed by a numerical designation.
Atrium - A large lobby with galleries at each floor level on three or more sides.

B

Back Member - A composite vertical or horizontal mullion consisting of two or more aluminum extrusions. The interior portion is the back member or gutter and the extreme exterior portion is the face cover. Some systems have an intermediate pressure plate which holds the glass secure against the back member with fasteners. The face cover then snaps over the pressure plate to conceal the fasteners. Also see Pressure Plate.
Back Stop - A mechanical feature of a door closer which completely stops the opening swing of a door at a pre-set position.
Backer Rod - A round compressible material, either open or closed cell, placed into voids between materials to insulate and allow a backing for the application of sealant. Backer rod is available in multiple diameters.
Backset, Door - Dimension from the face plane of door to the face plane of frame.
Backset, Hinge - Depth of hinge leaf that is mortised into door stile or door jamb.
Backset, Lock - Distance from the edge of the locking stile to the centerline of the cylinder, measured parallel to the face of the door.
Baffle - A material used in aluminum storefronts, fixed horizontal ribbon windows and curtain walls to impede the flow of water or air into the framing system through weep slots.
Barrier Free - The elimination of barriers or obstructions to permit ready access to and through entrance doors to physically challenged individuals using wheelchairs, crutches, walkers, etc.
Bearing Wall - A wall that supports loads in addition to its own weight.
Bite - Distance by which the inner edge of the aluminum frame glazing pocket or stop overlaps the glass.
BOCA National Codes - A series of performance-oriented model codes responsive to the latest advancements in construction technology. Building Officials and Code Administrators (BOCA) International, Inc. was founded in 1915. Area of influence: Northeast portion of the United States.
Brake Metal Shape - Aluminum sheet stock bent or "broken" to desired shape, as required by specific job conditions, on a power or manual press brake. This shape is often used to cover conditions which cannot be covered by a stock extruded aluminum shape.
BTU - British Thermal Unit.
Bulkhead - The bottom member of an entrance frame which forms a base for a sidelite next to the door.
Bull Nose - Convex rounding of a member, such as an extruded aluminum snap-on radius face cover used on aluminum curtain walls.
Butt Hung Door - A door hung on butt hinges.
Butt Joint - A meeting of two members squarely.

GLOSSARY

Common Terms

C

Center Hung Door - A door hung on center pivots.
Center Pivot - Swing hardware having its pivot axis on the thickness centerline of the door and normally located about 2-3/4" (69.9) from the hinge jamb.
Compression Gasket - A method of securing the glass into the aluminum frame glazing pocket by using a soft gasket on one side of the glass and a firm, dense gasket called a wedge on the other. Also see Wedge Glazing.
CRF - Condensation Resistance Factor is a rating number obtained under standard test conditions which allows a prediction, within reasonable accuracy, of the ability of a window, door or glazed wall to resist the formation of condensation on interior surfaces. (Higher CRF Value indicates better performance.)
CSI - Construction Specifications Institute.
Cope - To notch an aluminum framing member such as a channel, etc. so that another member may be fitted against it.
Coped Joint - A joint between two aluminum framing members where one extrusion is cut to the profile of the second.
Crash Bar - The cross bar of a panic exit device serving as a push bar to actuate the panic hardware on entrance doors.
Crazing - Minute cracks in a surface or coating caused by force bending a material, such as aluminum, beyond the recommended minimum radius.
Curtain Wall (Aluminum) - An exterior building wall which carries no roof or floor loads and consists of a combination of aluminum, glass, and other surfacing materials supported by the aluminum framework.

D

Dead Latch - A latch bolt having an auxiliary feature which prevents its retraction by end pressure when in a projected position.
Dead Lock - A lock in which a bolt is moved by means of a key or thumbturn and is positively stopped in its projected position.
Deadload - A static applied load. A load without movement.
Debridging - The process whereby the aluminum bridge web connecting the exterior and interior portions of the extruded thermal break cavity is removed either by milling or sawing after the polyurethane filler has cured.
Deflection - The measure of movement of a member from its static position when subjected to loads.
Division Bar - Lightweight extruded aluminum framing sections used vertically or horizontally for small fixed horizontal window units. A division bar consists of a face member which has an extruded spline with threads for receiving exposed fasteners inserted through the back member which has holes drilled in it. The back and face members are screwed together after the glazing infill is installed to form the composite section.
Dogging Device - A device used to lock the crash bar on a panic exit device in the open position.
Door Clearance - The margin of clearance around the edge of a door, between door and frame.
Door Frame - An assembly of members, consisting of jambs and a header, into which a door or doors fit when closed. The door frame may also include transom lites and adjacent sidelites. Also see Threshold.
Door Jamb - One of two vertical members of a door frame. The hinge jamb is the jamb to which the hinges or pivots are mounted; the lock jamb is the jamb at the leading edge of the door where a lock bolt may be engaged.
Door Lite - The glass area in a door.
Door Opening - The opening dimension of a doorway is measured from inside of jambs and from floor line to underside of frame header. The opening size is usually the nominal door size and is equal to the actual door size plus clearances and threshold height.
Double Acting Door - A door equipped with hardware which permits it to swing in both directions from the plane of its frame.
Dry Glazing - A method of securing glass in a frame that uses pre-formed resilient gaskets instead of a wet sealant or glazing compound.

E

Edge Blocks - Short lengths of elastomeric materials located at one or both sides of a glass lite to limit lateral movement ("walking") caused by horizontal expansion/contraction, minimal building sway or other factors.
Edge Clearance - The dimension between the edge of the glass or panel and its surrounding frame which is measured in the plane of the glass or panel.
Edge Cover - The dimension by which the inner edge of the frame or stop overlaps the edge of the glass or panel.
Egress - Exit or way out.
Electrolysis - Chemical decomposition of a metal surface by the action of dissimilar metals and moisture.
End Dam - Extruded aluminum or rigid vinyl member used to isolate water within the system so that it weeps to the exterior.
Entrance - The doorway, vestibule or lobby through which one enters a building.

GLOSSARY

Common Terms

E.P.D.M. (Ethylene Propylene Diene Monomer) - A type of elastomeric material which has excellent resistance to ozone, sunlight, and severe weather conditions and is ideal for outdoor service. E.P.D.M. is commonly used for pre-formed glazing gaskets.
Exterior Glazing - A method in which glass is secured in an opening from the exterior of the building.
Extrusion - The metal fabricating process by which a heated aluminum billet is forced to flow through a hole in a steel die of the desired shape.

F

Fabricate - To cut, punch and subassemble members.
Facade - The exterior face of a building, especially the principal face.
Face Clearance - The dimension measured between the face plane of a lite of glass or panel and the nearest face of its retaining frame or stop.
Face Cover - The exterior snap-on cover used with composite type mullions (mullions consisting of two or more extrusions). Also see Back Member and Pressure Plate.
Fenestration - The arrangement and proportion of window and door openings in a building.
Finish Hardware - Exposed hardware, such as hinges, pivots, locks, etc., that has a finished appearance as well as a function used with doors and windows.
Flush Bolt - A rod or bolt which is mounted flush with the edge or the face of the inactive leaf in a pair of doors for locking the door to the frame at head and/or sill. A flush bolt mounted in the edge is operated by means of a recessed lever.
Flush Door - A paneled door in which the panels are finished flush with the rails and stiles in one or both faces.
Flush Glazing - Glazing in which glass is set in a recess in the aluminum frame; stops are also recessed; the glazing is flush with the frame surface. These systems are also called "pocket glazed" and "center glazed".
Framing - An assembly of structural aluminum extrusions consisting of a jamb, vertical mullion, intermediate horizontal, header and sill which are fitted together to form a structure into which glass or other infill material is installed.

G

Glass Stop - A glazing bead which is either applied to or is an integral part of the aluminum framing system.
Glaze - To install glass lites or infill material.
Glazing - The act of furnishing or fitting with glass.
Glazing Bead - Silicone or extrusion applied to a frame, door stile or rail to hold glass or infill in a fixed position.
Glazing Gasket - A preformed elastomeric or plastic material applied between the face of the glass and the glazing pocket of the framing to seal and secure glass into frames by a dry glazing method without using compounds or tapes.
Glazing Pocket - The recessed channel in aluminum framing systems designed to receive glazing infills. Also known as a Glazing Reglet.
Glazing Pocket Filler - An aluminum extrusion which snap fits or slides into the glazing pocket to provide a continuous flat surface.
Guard Bar - A protective bar applied to the lower portions of a door or sidelight to prevent accidental contact with glass.

H

Hand of Door - The designation for describing the direction a door swings. Visualize your back to the hinge or pivot jamb. If the door swings right, it is a right-handed door. If the door swings left, it is a left-handed door.
Head (or Header) - The horizontal frame member which forms the top of a frame.
Hinge Stile - The vertical structural member of a door to which the hinges are attached and about which the door pivots.

I

"I" Value (Moment of Inertia) - "I" is a numerical value which describes the area of the cross section of a member about the neutral axis perpendicular to the loads. "I" values determine the deflection characteristics of a member. (Members with higher "I" values deflect less than members with lower "I" values.)
Inactive Door (or Leaf) - The last door of a pair of doors to be released when unlocking, usually the one not equipped with a primary lock.
Infill - Various materials glazed into a framing system.
Insulating Glass - An integral glass unit made up of two or three individual lites of glass separated by an air space.
Insulation - Material that has the ability to reduce heat or cold transmission.

GLOSSARY

Common Terms

Interior Glazing - A method in which glass is secured in an opening from the interior of the building.
Intermediate Butt Hinge - A butt hinge located between the top and bottom hinges on a door.
Intermediate Pivot - A jamb mounted alignment and/or reinforcing offset pivot located between the top and bottom offset pivots on a door.

J

Jamb - The end vertical member of an aluminum framing system which terminates at the intersection of a wall. It is often referred to as a wall jamb.
Jamb Anchor - A metal device inserted in the back of a metal frame to anchor the frame to the wall. A masonry anchor is used in a masonry wall and a stud anchor in a wall built with wood or metal studs.

K

K.D. - An abbreviation for "Knocked Down" or disassembled.
Kerf - The channel or groove cut by a saw or other tool.
Keyway - The keyhole of a cylinder lock.
Kick Plate - A plate applied to the face on the bottom of a door or sidelite to protect against abrasion or impact loads or to maintain sight lines.
Knuckle - The parts of a butt hinge which enclose the hinge pin.

L

Laminated Glass - A sandwich of two or more lites of glass bonded together with resilient plastic interlayers.
Latch - A mechanism having a spring-activated beveled latch bolt but no locking device. Retraction of the latch bolt is by lever handle or knob.
Leaf - An individual door used either as a single or in multiples (leaves).
Lintel - A horizontal structural member that spans an opening at the head to carry the weight of construction above the opening.
Lite - Term for a pane or finished piece of glass.
Liveload - Loads from non-permanent parts of the building. Window washing and glazing rigs are liveloads.
Lock Face Plate - The exposed plate set on the edge of a door to cover a locking mechanism.
Louvers - Metal slats, either movable or fixed; as in a door fitted with horizontal slats for admitting air and light and for shedding rain.
Low E Glass - Low emissivity glass; a type of reflective glass used to reduce radiation heat transfer and improve the "U" value of the glazing.

M

Meeting Stile - The stiles of the active and inactive leaves which meet when a pair of doors is closed.
Miter - A joint made up of two members, each of which is cut one-half the total angle of the joint.
Mortise - A rectangular cutout which is fabricated in the aluminum entrance door and/or frame in preparation to receive a lock or butt hinge.
Mortise Lock - A lock designed to be installed in a mortise on the stile of the door rather than applied to the door's surface.
MSDS - A Material Safety Data Sheet is a detailed information bulletin prepared by the manufacturer or importer of a chemical that describes the physical and chemical properties, physical and health hazards, routes of exposure, precautions for safe handling and use, emergency and first-aid procedures, and control measures. Information on an MSDS aids in the selection of safe products and helps prepare employers and employees to respond effectively to daily exposure situations as well as to emergency situations.
Mullion - An intermediate vertical or horizontal framing member used for separating lites of glass or panels set in a series.
Muntin - A secondary framing member used to hold panes within a window, window wall or glazed door.

N

Neoprene - A synthetic rubber having physical properties closely resembling those of natural rubber but not requiring sulphur for vulcanization. Extremely good weather resistance (both heat and cold) with ultraviolet stability. Commonly used for glazing gaskets.

GLOSSARY

Common Terms

O

Offset Arm - A steel bar (arm) connected to the overhead concealed closer spindle on one end and guided into the door top rail channel on the other end. Designed to transfer the door movement from the pivot point to the closer.
Offset Pivot - A pin-and-socket hardware device with bearing contact by means of which a door is suspended in its frame, allowing it to swing about an axis which is normally located about 3/4" (19) out from the door face.
OSHA - Occupational Safety and Health Administration is a federal agency charged with making the laws and standards that are designed to make the work-place safe.

P

Panic Exit Hardware - A door locking device used on exit doors; the door latch releases when a bar located across the interior leaf of the door is pushed. *Mortise type* - panic exit hardware having the lock mechanism mortised into the edge of the door or concealed within the door. *Rim type* - panic exit hardware having the lock mechanism mounted on the push side of the door. *Vertical rod type, surface or concealed* - panic exit hardware having latches in or on the top and/or bottom of the door, which are activated through the crash bar by a rod linkage extending vertically on or in the door stile.
Plumb - The condition of exact vertical alignment.
Pocket Filler - An extrusion which snaps into a mating vertical or horizontal member to provide a glazing pocket.
Poly-Aluminizer™ - A unique method of abrading the interior surface of the aluminum thermal cavity in order to provide a mechanical bond when the cavity is filled with polyurethane polymer thermal break material. Also see Thermal Cavity.
Poured and Debridged - Framing system thermal break made by flowing a catalyzed liquid material with low thermal conductivity into a one-piece channel and then removing the base of the channel or bridge after solidification to form a thermally improved extrusion. Also see Thermal Cavity.
Pre-formed Gaskets - Contoured extruded E.P.D.M. or neoprene glazing gaskets configured to fit into the glazing reglet of extruded aluminum framing systems and to secure the glass in the reglet by compression.
Pressure Plate - The second member of a composite vertical or horizontal mullion section consisting of two or more aluminum extrusions. The pressure plate is attached by bolts to the back member for securing the glass tightly between the two members, which are separated from direct contact with the glass by pre-formed gaskets. Pressure plates are usually concealed by a snap-on face cover. Also see Back Member and Pre-formed Gaskets.
Purlins - Horizontal members extending between rafters for supporting the glass on slope glazed systems.
Push Bar - A fixed bar or plate located across a glazed door used to open or close the door while providing protection for the glass.

R

Racking - The forcing out-of-plumb of structural components, usually by wind, seismic stress, or thermal expansion or contraction.
Rafter - Beams or mullions supporting the purlins in slope glazed systems.
Rail - A horizontal door member located at the top and bottom of the door or in an intermediate location.
Receptor - A channel-shaped, telescopic member which adapts the frame of a window wall or storefront system to the size of the window wall or storefront system opening; an adapter.
Removable Mullion - A door mullion which can be removed temporarily from a door frame to permit large objects to be moved through the frame.
Reveal - The distance from the face of a door to the face of the frame on the pivot or hinge side.
Ridge - The horizontal member at the junction of the upper edges of two sloping glass areas.
Roller Latch - A hardware device for holding a door in a closed position. It consists of a spring-loaded roller mortised into the edge of a door designed to engage with a grooved strike mortised into the frame jamb.

S

"S" Value - Section Modulus of the cross section of a member about the neutral axis perpendicular to the loads. This section property is used to calculate the stress on a member under loads, and is directly proportional to the capacity of the member. (Higher "S" values improve the member's performance and reduce internal stress.)
Sash - An assembly of lightweight aluminum extrusions forming the perimeter of a fixed lite of glass.
SBC - Standard Building Code was first enacted by the Southern Building Code Congress International on November 16, 1945. The SBC is a series of model building codes with the purpose of protecting the public's life, health, and welfare in the built environment. Area of influence: Southeastern portion of the United States.

GLOSSARY

Common Terms

Screw Spline Joinery - A type of joinery used in extruded aluminum panelized framing systems which eliminates the need for clips and exposed fasteners. The screw splines are designed as an integral part of the profiles most typically used as horizontals. Intermediate vertical mullions are designed as two part profiles so the fasteners can be concealed at the intersection of horizontal and vertical joints.
Setting Block - A small piece of neoprene, E.P.D.M., silicone or other material placed in a frame to distribute the weight of the glass, to center the glass vertically within the frame, and to prevent glass-to-metal contact. The recommended durometer for setting block material is 85±5 Shore A scale. Also see Shore A.
Shear Block - A type of joinery that uses a clip (the shear block) attached to a vertical mullion. The horizontal member fits over the clip and is secured by screws driven into the shear block.
Shim - A spacer of uniform thickness and varying sizes used to plumb and level frames.
Shore A - Test used to measure the durometer (hardness) of elastomeric glazing gaskets. Usually referred to as Shore A (Shore Instrument Company - Scale A).
Sidelite - The glazed frame or frames placed on one or both sides of a door.
Sill - The bottom horizontal member of a framing system which rests on the floor slab.
Single Acting Door - A door mounted to swing in one direction only from the plane of its frame.
Slope Glazed - A glass and framing assembly that is sloped more than 15 degrees from vertical.
Snowload - Loads imposed on slope glazed structures by the accumulation of snow.
Soffit - The exposed undersurface of any overhead component of a building, such as an arch, balcony, beam, cornice, lintel, or vault.
Span - Distance between centers of supports of a truss, beam or girder.
Spandrel - Opaque glazing material most often used to conceal building elements between floors of a building so they cannot be seen from the exterior.
Splice - A longitudinal or latitudinal connection between the parts of a continuous member.
S.T.C. - Sound Transmission Class is a single number rating that measures the sound insulation value of a partition, door, or window. It is derived from a curve of its insulation value as a function of frequency. The higher the number, the more effective the sound insulation.
Steel Reinforcing - A steel component placed within a vertical mullion to add stiffness and increase the windload capability of the system. Steel reinforcing may also be used to limit deadload deflection in intermediate horizontals.
Stiffener - A reinforcing member which serves to limit the deflection of the member to which it is attached.
Stile - A vertical member of a door, exclusive of applied glazing beads. Stiles are usually designated by function, such as lock stile, hinge stile or meeting stile. Thin Stiles have a face width of 1-3/4" (44.5) or less; Narrow Stiles have a face width from 1-3/4" (44.5) to 2-1/2" (63.5); Medium Stiles have a face width from 3" (76.2) to 4" (101.6); Wide Stiles have a face width greater than 4" (101.6).
S.T.L. - Sound Transmission Loss is a measure of the sound insulation value of a partition. It is the amount, in decibels, by which the intensity of the sound is reduced in transmission through the partition.
Stool - The narrow shelf fitted on the inside of a window which butts against the sill.
Storefront Sash - An assembly of molding members forming a continuous frame for a fixed glass storefront. Also see Sash.
Structural Glazing - High modulus silicone is used to transmit the loads from the glass to the building structure or the aluminum members behind the glass.
Subframe - A supporting frame installed prior to and concealed by a finished door frame.
Subsill - An aluminum extruded profile installed beneath the primary sill of a framing system specifically designed to function as a secondary defense for collecting infiltrated water which is then weeped to the exterior.

T

"T" Anchor - An aluminum extruded shape with a cross section which resembles the letter "T". This extrusion is cut into short lengths allowing the perpendicular leg(s) to slide fit into the top and bottom of the tubular vertical mullions for the purpose of securing the mullions by then fastening the horizontal flange of the "T" to the structure.
Temper (Aluminum) - Process used to bring a proper degree of hardness or elasticity by heat treatment. T5 - Artificially aged to improve mechanical properties and stability. T6 - Solution treated and artificially aged to improve the allowable stresses and consequently the capacity to resist greater moments of inertia on curtain wall applications.
Tempered Glass - Strong, break-resistant glass created in a secondary process via controlled air cooling of the heated glass. Tempered glass is four times stronger than annealed glass; a form of safety glazing. When shattered, it breaks into small pieces.
Tempering - Strengthening glass with heat and controlled air cooling.
Thermal Break - An insulating material of low thermal conductivity placed between materials of high conductivity within the system itself to inhibit the flow of cold or heat.

GLOSSARY

Common Terms

Thermal Cavity - The hollow, channel or void provided in the extruded framing member into which the liquid thermal break material is poured.
Thermal Expansion and Contraction - An increase in the dimensions of a material in direct proportion to the rise in its temperature and conversely a dimensional shrinking as a result of a drop in temperature.
Thermal Stress - Strain on the edges of a glass pane caused by the faster expansion rate of the center of the lite when exposed to heat.
Thermal Transmittance (U Value) - The time rate of heat flow per unit area under steady state conditions through a body for a unit air temperature difference on the two sides of the body.
Thermally Improved - Framing systems which for the most part have a continuous thermal isolator between the exterior and interior aluminum framing members, but which have intermittent contact between the exterior and interior by a highly conductive material such as aluminum or a steel fastener used on popular pressure bar framing systems creating a thermal short circuit.
Threshold - The lower horizontal member of a door frame extending from jamb to jamb that lies directly under a door and is set on the floor. Thresholds are not required on all door frames.
Throw - The distance which a lock bolt or latch bolt projects when in the locked position.
Transom - The frame area immediately above a door opening which contains fixed glass or an operating sash.

U

Uniform Building Code (UBC) - The building code generally used in the western United States, developed by the International Conference of Building Officials (ICBO) in Whittier, CA. Area of influence: Areas in the United States west of the Mississippi River.
Uniform Construction Index (UCI) - CSI format system to standardize classification of construction related products; Section 08 41 13 - Aluminum Framed Storefronts; Section 08 32 13 - Aluminum Framed Mall Sliding Doors; Section 08 44 13 - Glazed Aluminum Curtain Walls.
U-Value - Measures the heat transfer through a material due to the difference in air temperatures on the two sides. (Lower U-values indicate better performance.) Also see Thermal Transmittance.

V

Vestibule - A small entrance hall or passage-way between the outer door and the interior of a building.

W

Walking Beam Pivot - A form of retractable top center hung pivot.
Water Deflector - A device typically inserted into the glazing pocket at the intersection of intermediate horizontal and vertical joints to deflect any infiltrated water over the ends of the lower lite of glass and downward into the subsill where it is weeped to the exterior: On some framing systems consisting of two piece vertical and horizontal (face and back member) components, the water diverter may run the full length of the intermediate horizontal and is usually designed to be a rigid vinyl extrusion.
Wedge Glazing - Interior, flexible, continuous, pressure fit gasket that insures a high compression seal between the glass and the aluminum while applying pressure to the outside soft glazing gasket, thus sealing it. Also see Compression Gasket.
Weep Hole - A small opening in the sill or intermediate horizontal of aluminum storefronts, window wall and curtain wall systems which allows infiltrated water to drain to the building exterior.
Wet Glazing - A method of securing glass in a frame that uses sealants or glazing compounds instead of preformed dry resilient gaskets.
Windload - Force exerted by wind on framing systems and complete structures, may be inward (positive) or outward (negative).
Window Wall - Aluminum framing systems designed for fixed horizontal ribbon window applications. Systems are usually designed for interior glazing infills and are installed between floor slabs on the building.

Thermal Break

Thermal Break Technology Featuring the Poly-Aluminizer™ and Lancer™ Methods

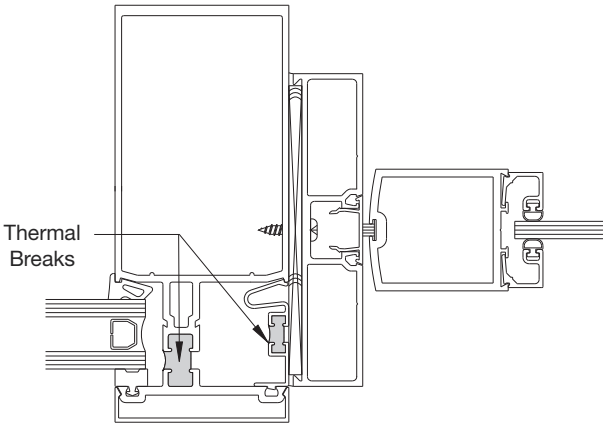

U.S. Aluminum engineers thermally broken framing systems to satisfy the increasing demands for energy conservation. This one small, but very important component in our thermally broken framing products addresses several important concerns expressed by various architects, structural engineers, and glazing contractors in our industry.

What About Dry Shrinkage?

Our response is the Poly-Aluminizer™ and Lancer™ methods which mechanically modifies the aluminum extrusion and effectively improves the adhesive bond between the polyurethane polymer and the surface finish of the aluminum cavity. The Poly-Aluminizer™ accomplishes this through a unique method of abrading the thermal pocket in such a way as to produce a mechanical bond. The Lancer™ process provides mechanical surface conditioning of the extrusion cavity to insure proper adhesion to difficult finishes. Test results indicate 100% adhesion even on mill finish after 90 cycles in an environmental chamber.

Channel before the process

What About Structural Integrity?

To meet the need to maintain structural integrity, designers should specify U.S. Aluminum framing for a structurally superior thermally broken product. After the aluminum channel has been modified, it is filled with a polyurethane polymer that cures to a rigidity that is equal to or better than that of the aluminum channel. Then we debridge the aluminum channel along its entire length. The structural integrity is maintained while adding the benefits of thermally broken framing.

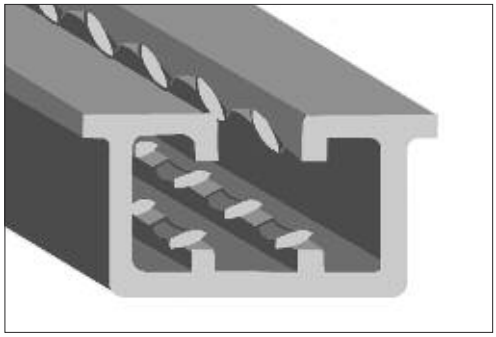

Channel after being mechanically modified

What About CRF Values?

Certified thermal test reports for all U.S. Aluminum products tested in accordance with AAMA 1503.1-88 are available upon request from any of our service centers, or by calling our national toll free number at (800) 262-5151.

Why Take a Chance?

U.S. Aluminum uses the latest thermal break technology and equipment for producing polyurethane thermally broken aluminum framing systems. All thermally broken framing products are manufactured in-house by U.S. Aluminum technicians and tested in accordance with AAMA-A8-1990. Our products are backed by the people and technology of an organization where innovation and reliability create a proven standard of excellence.

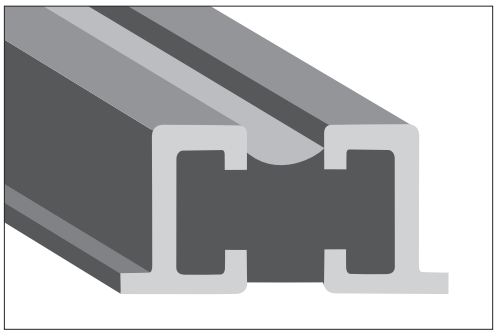

Channel with polyurethane thermal break

INDEX

A
A.D.A. Door Rail Adaptor 35-H9
Access Control Handles ....29-H9 to 32-H9
Accufab Curtain Wall Tool ....56-P1 to 57-P1
Accessories
- Entrance Door ....01-H9 to 40-H9
- Series 2100, 2200 Curtain Walls ....27-J1 to 30-J1
- Series 250, 400, 550 Doors 08-H1
- Series 3150 Curtain Wall ....25-J2 to 28-J2
- Series 3250 Curtain Wall ....26-J3 to 29-J3
- Series 3252, 3252SG Curtain Walls 12-J4
- Series 4250, 4250T Curtain Walls ....17-J6 to 18-J6
- Series 4500, 4500SG Curtain Walls ....24-J7 to 29-J7
- Series BW3250 Curtain Wall ....13-N1 to 16-N1
- Series DH-350 Entrance Doors 07-M2
- Series HP3253, HP3253SG Curtain Walls 14-J5
- Series IW3250 Curtain Wall ....11-M1 to 13-M1
- Sun Control 32-K1

Addresses of Service Centers V
Adjustable Multi-Cutter Tool 55-P1
Adjustable Power Door Closers ....02-H9 to 05-H9
All-Glass Systems
- Beretta Door Hardware 18-P1
- Blumcraft Doors and Sidelites ....12-P1 to 15-P1
- Center Locks 11-P1
- DRS Door Rail System ....02-P1 to 10-P1
- Laguna Door Hardware ....19-P1 to 21-P1
- Patch Hardware ....16-P1 to 17-P1

Aluminum and Steel Canopies 26-K1
Aluminum Thresholds ....22-H1 to 23-H1, 36-H9 to 40-H9
Architectural Metal Systems ....42-P1 to 43-P1
Architectural Railing Systems ....40-P1 to 41-P1
Architectural Web Site 01-P1
Astragal, Security 24-H1

B
Backer Rods 53-P1
Balancer Series Balanced Doors ....01-H5 to 09-H5
Beretta Door Hardware 18-P1
Bi-Folding Door Systems ....30-P1 to 31-P1
Blast Mitigation Systems ....01-N1 to 09-N3
Blast Resistant
- Curtain Walls ....01-N1 to 16-N1
- Fixed Windows ....02-N3 to 03-N3, 06-N3 to 07-N3
- Single Hung Windows ....02-N3 to 05-N3
- Sliding Windows ....02-N3 to 03-N3, 08-N3 to 09-N3

Blumcraft Access Control Handles ....29-H9 to 32-H9
Blumcraft Doors and Sidelites ....12-P1 to 15-P1
Blumcraft Glass Entrance Hardware 09-P1
Bottom Rolling Door Systems ....28-P1 to 29-P1

C
C.R. Laurence Service Centers ....IV to V
Catalogs ....VIII to IX
Ceiling Mounted Sliding Door Systems ....22-P1 to 26-P1
Center Locks 11-P1
Center Pivot Doors and Frames ....14-H1 to 15-H1, 18-H1 to 19-H1
Cleaning Products 61-P1
Columbia Security Screen Doors 49-P1
Commercial Door Thresholds ....22-H1 to 33-H1, 36-H9 to 40-H9
Concealed Overhead Door Closers ....04-H9 to 05-H9
Continuous Hinges ....10-H9 to 11-H9
Corner Construction
- Series 250, 400, 550 Doors 09-H1
- Series 400T, 550T Thermal Doors 06-H4
- Series 800, 850 Durafront Entrance System 11-H2
- Series FFM1, FFN1, FFW1 Entrance Doors 07-H3

Curtain Wall Estimating Software VII
Curtain Wall Tool, Accufab ....56-P1 to 57-P1
Curtain Walls ....01-J1 to 30-J1, 01-J2 to 28-J2, 01-J3 to 29-J3, 01-J4 to 12-J4, 01-J5 to 14-J5, 01-J6 to 18-J6, 01-J7 to 29-J7, 01-M1 to 14-M1, 01-N1 to 16-N1
Custom Architectural Metals ....42-P1 to 43-P1
Custom Door Quote/Order Forms ....14-H2 to 15-H2, 08-H3 to 09-H3, 08-H4 to 09-H4
Custom Thresholds 40-H9

D
Deadload Charts
- Defender Series BW3250 Curtain Walls 12-N1
- Series 2100, 2200 Curtain Walls ....25-J1 to 26-J1
- Series 3150 Curtain Walls ....23-J2 to 24-J2
- Series 3250 Curtain Walls ....24-J3 to 25-J3
- Series 3252 Curtain Walls 11-J4
- Series 4250, 4250T Curtain Walls 16-J6
- Series 4500, 4500SG Curtain Walls 23-J7
- Series HP3253 Curtain Walls 13-J5
- Storm Wall Series IW3250 Curtain Walls 14-M1

Defender Blast Mitigation Products ....01-N1 to 09-N3
Door
- Access Control Handles ....29-H9 to 32-H9
- Chime 09-H9
- Closers ....02-H9 to 05-H9
- Deadlocks, Deadbolts, Deadlatches ....16-H9 to 17-H9, 19-H9
- Electric Strikes 18-H9
- Flush Bolts ....21-H9 to 22-H9
- Frames for Entrance Doors ....18-H1 to 21-H1
- Header Bolt Kits 21-H9
- Headers 10-P1
- Hinges ....08-H9 to 11-H9
- Lock Cylinders ....14-H9 to 15-H9
- Paddles and Handles 20-H9
- Panic Exit Devices ....23-H9 to 28-H9
- Pivots ....06-H9 to 07-H9
- Power Supplies, Transformers, and Rectifiers 18-H9
- Pulls ....12-H9 to 13-H9
- Quote/Order Request Forms ....14-H2 to 15-H2, 08-H3 to 09-H3, 08-H4 to 09-H4
- Rails ....02-P1 to 05-P1
- Retainers 09-H9
- Stops and Holders ....33-H9 to 35-H9
- Thresholds ....22-H1 to 23-H1, 36-H9 to 40-H9
- Top Arm Assembly 06-H9

Doors From Stock ....14-H1 to 21-H1
Drill Jigs 30-J1, 26-J2, 27-J3, 18-J6, 26-J7
DRS Door Rail System ....02-P1 to 10-P1

E
Elephant Sliding Doors ....01-H8 to 08-H8
Entrance
- Door Headers ....22-H1 to 23-H1
- Door Muntins 08-H1
- Door Options ....01-H9 to 40-H9
- Doors From Stock ....14-H1 to 21-H1

Estimating Software for Curtain Wall and Storefronts VII
Exit Devices ....23-H9 to 28-H9
Extruded Aluminum Pull Handles and Push Bars 13-H9
Extruded Aluminum Thresholds ....22-H1 to 23-H1, 36-H9 to 40-H9

F
Fixed Windows, Conventional ....01-L5 to 03-L5, 06-L5 to 07-L5
Fixed Windows, Blast Resistant ....02-N3 to 03-N3, 06-N3 to 07-N3
Fixed Windows, Hurricane/Impact Resistant ....08-M4 to 09-M4, 14-M4
Flush Bolt Kits 22-H9
Frameless Glass Door Kits ....06-P1 to 07-P1
Frameless Shower Products ....50-P1 to 51-P1

G
Glass
- Awnings ....27-K1 to 31-K1

INDEX

Cleaners 61-P1
Door Kits ....06-P1 to 07-P1
Entrance System Hardware ....02-P1 to 19-P1
Formulas for Doors ....10-H1 to 13-H1, 12-H2 to 13-H2, 07-H4
Mounted Sliding Door Systems 21-P1, 26-P1
Railing Systems ....40-P1 to 41-P1
Scratch Removal Systems ....58-P1 to 59-P1
Glazing Gaskets 55-P1
Glazing Tools ....52-P1 to 61-P1
Guarda Protective Security Screens ....44-P1 to 48-P1
Gypsum Board Adaptors 19-J2, 19-J3, 12-J6, 15-J7

H

Hand Cleaners 61-P1
Hand Rail Systems ....40-P1 to 41-P1
Header Bolt Kits 21-H9
Headers and Head Channels ....08-P1 to 10-P1
Headers for Entrance Doors ....22-H1 to 23-H1
Hinges for Entrance Doors ....08-H9 to 11-H9
Horizontal Sliding Windows, Conventional ....01-L5 to 03-L5, 08-L5 to 09-L5
Horizontal Sliding Windows, Blast Resistant ....02-N3 to 03-N3, 08-N3 to 09-N3
Horizontal Sliding Windows, Hurricane/Impact Resistant ....08-M4 to 09-M4, 12-M4 to 13-M4
Hurricane/Impact Resistant
Balcony/Terrace Doors ....01-M3 to 05-M3
Concealed Vent Windows ....02-M4 to 07-M4
Curtain Walls ....01-M1 to 14-M1
Entrance Doors ....01-M2 to 07-M2
Fixed Windows ....08-M4 to 09-M4, 14-M4
Single Hung Windows ....08-M4 to 11-M4
Sliding Windows ....08-M4 to 09-M4, 12-M4 to 13-M4
Windows ....01-M4 to 14-M4

I

Interior Office Partition Systems ....36-P1 to 39-P1

J

Jackson Overhead Door Closers ....04-H9 to 05-H9
Jackson Panic Exit Devices ....23-H9 to 24-H9

K

Kits for Frameless Shower Doors 51-P1
Kits for Glass Doors ....06-P1 to 07-P1

L

Ladder Pull Handles 13-H9
Laguna Door Hardware ....19-P1 to 21-P1
Lever Handles and Locks 06-H6
Light Duty Stacking Partition System 35-P1
Light Shelf Systems ....20-K1 to 21-K1

M

Magnetic Door Retainers 09-H9
Map of Service Centers V
Metal Cleaners 61-P1
Mid-Panels 27-H9
Mid-Panel Panic Exit Devices 28-H9

O

Office Partition Systems ....36-P1 to 39-P1
Offset Pivot Doors and Frames ....16-H1 to 17-H1, 20-H1 to 21-H1
Offset Pivots 07-H9
Offset Pull Handles ....12-H9 to 13-H9
Overhead Concealed Door Closers ....04-H9 to 05-H9
Overhead Track Sliding and Bi-Fold Doors ....30-P1 to 31-P1

P

Panic Exit Devices ....23-H9 to 28-H9
Partition Systems ....32-P1 to 39-P1, 51-P1
Patch Hardware ....16-P1 to 17-P1
Phone Numbers for Service Centers V
Pivot Door Hardware 19-P1
Plastic Cleaners 61-P1
Platinum Series Full Framed Doors ....01-H3 to 07-H3
Premium Series Balanced Doors ....01-H5 to 09-H5
Prepared Headers and Thresholds for Entrance Doors ....22-H1 to 23-H1
Product Information on the Web Site ....XI to XVI
Protective Security Screens, Guarda ....44-P1 to 48-P1
Pull Handles and Push Bars ....12-H9 to 13-H9

R

Railing Systems ....40-P1 to 41-P1
Restroom Partition System 51-P1

S

Scratch Removal Tools ....58-P1 to 59-P1
Security Screen Doors, Columbia 49-P1
Security Screens, Guarda ....44-P1 to 48-P1
Shims 54-P1
Shower Door Hardware ....50-P1 to 51-P1
Sidelite Rails 08-P1
Silicone Sealants 52-P1
Single Hung Windows, Conventional ....01-L5 to 05-L5
Single Hung Windows, Blast Resistant ....02-N3 to 05-N3
Single Hung Windows, Hurricane/Impact Resistant ....08-M4 to 11-M4
Sliding
Elephant Door Systems ....01-H8 to 08-H8
Glass Door Systems ....20-P1 to 31-P1
Shower Door Kits 51-P1
Wood Door System 25-P1
Special Features
Aluminum and Steel Canopies 26-K1
Aluminum Trellis Systems 24-K1
Balanced Doors ....02-H5 to 04-H5
Defender Series BR7500 Windows 04-N2
Defender Series BW3250 Curtain Wall 05-N1
Defender Series BW7600 Windows 06-N2
Defender Series BW8000 Windows 04-N3
Defender Series BW8100 Windows 06-N3
Defender Series BW8200 Windows 08-N3
Elephant Sliding Doors 04-H8
Interior Light Shelf Systems 20-K1
Series 800, 850 Durafront Entrance System 11-H2
Series 2100, 2200 Curtain Walls ....05-J1 to 06-J1
Series 3150 Curtain Wall 05-J2
Series 3250 Curtain Wall 04-J3
Series 3252, 3252SG Curtain Walls 04-J4
Series 3600 Sunshade 04-K1
Series 4250T, 4250 Curtain Walls 05-J6
Series 4500, 4500SG Curtain Walls ....04-J7 to 05-J7
Series 7200, 7300 Windows 04-L1
Series 7400 Windows 04-L2
Series 7500 Windows 04-L3
Series 7600 Windows 04-L4
Series 8000 Single Hung Windows 04-L5
Series 8100 Fixed Windows 06-L5
Series 8200 Horizontal Sliding Windows 08-L5
Series CRL7700 Sunshades 06-K1
Series CRL7750 Sunshades 08-K1
Series HP3253, HP3253SG Curtain Walls 04-J5
Series IW3250 Curtain Wall 05-M1
Series IW7500 Windows 04-M4
Series IW7600 Windows 06-M4
Series IW8000 Windows 10-M4
Series IW8100 Windows 14-M4
Series IW8200 Windows 12-M4
Vertical Screen Systems 22-K1
Specifications
Balanced Doors 05-H5
Defender Series BR7500, BW7600 Windows ....02-N2 to 03-N2
Defender Series BW3250 Curtain Wall ....02-N1 to 03-N1
Defender Series BW8000, BW8100, BW8200 Windows ....02-N3 to 03-N3
Elephant Sliding Doors 02-H8
Series 250, 400, 550 Entrance Doors 02-H1
Series 400T, 550T Thermal Doors 02-H4

INDEX

Series 800, 850 Durafront Entrance System 02-H2
Series 900 Terrace Doors 02-H6
Series 2000 Sliding Doors 02-H7
Series 2100, 2200 Curtain Walls ....02-J1 to 03-J1
Series 3150 Curtain Wall ....02-J2 to 03-J2
Series 3250 Curtain Wall 02-J3
Series 3252, 3252SG Curtain Walls 02-J4
Series 4250 Curtain Wall 02-J6
Series 4250T Curtain Wall 03-J6
Series 4500, 4500SG Curtain Walls 02-J7
Series 7200, 7300 Windows ....02-L1 to 03-L1
Series 7400 Windows ....02-L2 to 03-L2
Series 7500 Windows ....02-L3 to 03-L3
Series 7600 Windows ....02-L4 to 03-L4
Series 8000, 8100, 8200 Windows ....02-L5 to 03-L5
Series BAL-350 Balcony/Terrace Doors 02-M3
Series DH-350 Entrance Doors 02-M2
Series FFM1, FFN1, FFW1 Entrance Doors 02-H3
Series HP3253, HP3253SG Curtain Walls 02-J5
Series IW3250 Curtain Wall ....02-M1 to 03-M1
Series IW7500, IW7600 Windows ....02-M4 to 03-M4
Series IW8000, IW8100, IW8200 Windows ....08-M4 to 09-M4
Stacking Door Systems ....32-P1 to 35-P1
Stainless Steel Thresholds 38-H9
Steel Stiffeners 30-J1, 28-J2, 29-J3, 17-J6, 29-J7
Stock Entrance Doors ....14-H1 to 21-H1
Storefront Door Hinges ....08-H9 to 11-H9
Storefront Entrance Doors From Stock ....14-H1 to 21-H1
Storefront Estimating Software VII
Storm Front Balcony/Terrace Doors ....01-M3 to 05-M3
Storm Front Entrance Doors ....01-M2 to 07-M2
Storm Front Windows ....01-M4 to 14-M4
Sun Control Systems ....01-K1 to 32-K1
Sunshade
Blades ....17-K1 to 18-K1
Fascias 16-K1
Mounting Brackets 15-K1
Outriggers 15-K1
Sunshades
Custom Fabricated ....10-K1 to 14-K1
Series 3600 ....04-K1 to 05-K1
Series CRL7700 ....06-K1 to 07-K1
Series CRL7750 ....08-K1 to 09-K1
Surface Mounted Door Closers ....02-H9 to 03-H9

T

Technical Data
Balanced Doors ....06-H5 to 07-H5
Defender Series BW3250 Curtain Wall 04-N1
Elephant Sliding Doors 03-H8
Series 250, 400, 550 Entrance Doors 03-H1
Series 400T, 550T Thermal Doors 03-H4
Series 800, 850 Durafront Entrance System 03-H2
Series 900 Terrace Doors 03-H6
Series 2000 Sliding Doors 03-H7
Series 2100, 2200 Curtain Walls 04-J1
Series 3150 Curtain Wall 04-J2
Series 3250 Curtain Wall 03-J3
Series 3252, 3252SG Curtain Walls 03-J4
Series 4250T, 4250 Curtain Walls 04-J6
Series 4500, 4500SG Curtain Walls 03-J7
Series BAL-350 Balcony/Terrace Doors 03-M3
Series DH-350 Entrance Doors 03-M2
Series FFM1, FFN1, FFW1 Entrance Doors 03-H3
Series HP3253, HP3253SG Curtain Walls 03-J5
Series IW3250 Curtain Wall 04-M1
Telephone Numbers for Service Centers V
Thermal Break Technology 69-P1
Threshold Bolt Kits 22-H9
Thresholds for Entrance Doors ....22-H1 to 23-H1, 36-H9 to 40-H9
Tools, Glazing ....52-P1 to 61-P1
Top Hung Sliding Door Systems ....20-P1 to 26-P1
Trellis Systems ....24-K1 to 25-K1
Typical Details
Balanced Doors ....08-H5 to 09-H5
Defender Series BR7500 Windows 05-N2
Defender Series BW3250 Curtain Wall ....06-N1 to 11-N1
Defender Series BW7600 Windows 07-N2
Defender Series BW8000 Windows 05-N3
Defender Series BW8100 Windows 07-N3
Defender Series BW8200 Windows 09-N3
Elephant Sliding Doors ....05-H8 to 08-H8
Series 250, 400, 550 Entrance Doors ....05-H1 to 07-H1
Series 400T Thermal Doors 04-H4
Series 550T Thermal Doors 05-H4
Series 800, 850 Durafront Entrance System ....04-H2 to 09-H2
Series 900 Terrace Doors ....04-H6 to 05-H6
Series 2000 Sliding Doors ....04-H7 to 07-H7
Series 2100, 2200 Curtain Walls ....07-J1 to 17-J1
Series 3150 Curtain Wall ....06-J2 to 20-J2
Series 3250 Curtain Wall ....05-J3 to 20-J3
Series 3252, 3252SG Curtain Walls ....05-J4 to 09-J4
Series 4250T, 4250 Curtain Walls ....06-J6 to 13-J6
Series 4500, 4500SG Curtain Walls ....06-J7 to 16-J7
Series 7200, 7300 Windows ....05-L1 to 07-L1
Series 7400 Windows ....07-L2 to 09-L2
Series 7500 Windows ....05-L3 to 06-L3
Series 7600 Windows ....05-L4 to 06-L4
Series 8000 Single Hung Windows 05-L5
Series 8100 Fixed Windows 07-L5
Series 8200 Horizontal Sliding Windows 09-L5
Series BAL-350 Balcony/Terrace Doors ....04-M3 to 05-M3
Series DH-350 Entrance Doors ....04-M2 to 05-M2
Series FFM1, FFN1, FFW1 Entrance Doors ....04-H3 to 06-H3
Series HP3253, HP3253SG Curtain Walls ....05-J5 to 11-J5
Series IW3250 Curtain Wall ....06-M1 to 10-M1
Series IW7500 Windows 05-M4
Series IW7600 Windows 07-M4
Series IW8000 Windows 11-M4
Series IW8100 Windows 14-M4
Series IW8200 Windows 13-M4

U

U.S. Aluminum Service Centers V
U.S. Aluminum Web Site ....X to XVI
U-Channels 08-P1

V

Vanguard Security Astragal 24-H1
Vertical Screen Systems ....22-K1 to 23-K1
Von Duprin Panic Exit Devices 26-H9

W

Wall Mounted Glass Door Systems ....21-P1 to 22-P1, 24-P1 to 26-P1
Water Spot Remover 60-P1
Web Site for Architects 01-P1
Web Site Information for U.S. Aluminum ....X to XVI
Windload Charts
Defender Series BW3250 Curtain Wall 12-N1
Series 2100, 2200 Curtain Walls ....18-J1 to 24-J1
Series 3150 Curtain Wall ....21-J2 to 22-J2
Series 3250 Curtain Wall ....21-J3 to 23-J3
Series 3252, 3252SG Curtain Walls 10-J4
Series 4250T, 4250 Curtain Walls ....14-J6 to 15-J6
Series 4500 Curtain Wall ....17-J7 to 22-J7
Series HP3253, HP3253SG Curtain Walls 12-J5
Series IW3250 Curtain Wall 14-M1
Window Washing Tools and Supplies 61-P1

CUSTOMER SERVICES

U.S. Aluminum Methods of Ordering

- **usalum.com Never Closes!**

Many of our customers have found the most convenient method of ordering from us is through our "self-service" web site. When you use **usalum.com** to place your orders you have many options that other methods don't provide. You set the schedule and the pace because you can sign on 24 hours a day, seven days a week. There's no easier way!

Toll Free Fax Service

- **A Convenient Way of Ordering**

Fax ordering is very convenient because you can fill out your own purchase orders and then just fax them to us. You can be specific about shipping instructions or other details that will help us serve you. To send your orders or quote requests by toll free fax from anywhere in the U.S. or Canada, just dial **(866) 262-3299**.

Toll Free Customer Service Order Desk

- **Our Friendly, Trained Staff is Always Happy to Hear From You**

When you call our Customer Service Order Desk toll free at **(800) 262-5151** you'll find U.S. Aluminum staff who are trained to provide assistance with U.S. Aluminum products and services. They have instant access to pricing, stock availability, and the status of your account, plus they can connect you to U.S. Aluminum Technical Sales personnel if you need specialized product assistance. Order Desk hours are 8 am to 5 pm (Pacific Time) Monday through Friday.

Will Call Trade Counter

- **When You Need It Today, Our Will Call Trade Counter is Your Fastest Option**
- **Come In and Visit Us at All CRL and U.S. Aluminum Service Centers**

Every CRL and U.S. Aluminum Service Center has a Will Call Trade Counter where you can place and pick up your orders in person. When you place your order in advance by phone, fax, or over the Internet we can have it ready and waiting for you, which can save you a lot of time. Will Call Trade Counter hours are 8 am to 5 pm Monday through Friday. Some of our most experienced people staff our Will Call Trade Counter, and they are always happy to see you. Remember, to save time just place your order in advance.

Who May Buy

U.S. Aluminum is a manufacturer and wholesale distributor. Possession of this catalog or any other U.S. Aluminum sales literature does not constitute an offer to sell. Orders from individuals (except professional tradesmen) may not be accepted.

CURTAIN WALLS

CAT. NO. **USAL15**

U.S. ALUMINUM®

is a Manufacturer and Supplier of:

- Entrances and Storefronts
- Windows and Curtain Walls
- Sun Control Systems
- Window Wall Systems
- Hurricane Resistant Building Fronts
- Blast Mitigation Systems
- Custom Extrusions

U.S. ALUMINUM SERVES YOU FROM 12 LOCATIONS IN NORTH AMERICA

SERVICE CENTERS ARE PLANNED TO OPEN IN SEVERAL AREAS IN THE NEAR FUTURE.
PLEASE CALL US OR VISIT **USALUM.COM** FOR A CURRENT LIST OF LOCATIONS.

LOS ANGELES, CA
2450 E. VERNON AVE.
LOS ANGELES, CA 90058-1802
PHONE: (323) 268-4230
FAX: (866) 262-3299

WAXAHACHIE, TX
(DALLAS AREA)
200 SINGLETON DR.
WAXAHACHIE, TX 75165-5094
PHONE: (972) 937-9651
FAX: (972) 937-0405

ATLANTA, GA
5530 WESTPARK DRIVE SW
ATLANTA, GA 30336-2645
PHONE: (404) 344-3468
FAX: (404) 344-3412

MIAMI, FL
7500 N.W. 69TH AVE.
MIAMI, FL 33166-2543
PHONE: (305) 888-0077
FAX: (305) 884-3111

DALLAS, TX
4841 LAKAWANA ST.
DALLAS, TX 75247-6713
PHONE: (214) 638-8722
FAX: (214) 638-3299

CHICAGO, IL
6969 W. 73RD ST.
CHICAGO, IL 60638-6025
PHONE: (708) 458-9070
FAX: (708) 458-7364

ROCK HILL, SC
(CHARLOTTE AREA)
720 CELRIVER DR.
ROCK HILL, SC 29730-7419
PHONE: (803) 366-8326
FAX: (803) 366-5776

DAVENPORT, FL
(ORLANDO AREA)
45150 US HIGHWAY 27 NORTH
SUITE D
DAVENPORT, FL 33897-4512
PHONE: (863) 424-4700
FAX: (863) 424-4646

HOUSTON, TX
5910 WEST BY NORTHWEST BL.
SUITE 300
HOUSTON, TX 77040-4949
PHONE: (713) 462-1766
FAX: (713) 462-1680

ST. LOUIS, MO
11621 FAIRGROVE INDUSTRIAL BL.
MARYLAND HEIGHTS, MO 63043-3437
PHONE: (314) 997-5112
FAX: (314) 997-7504

CANADA
LANGLEY, BC
(VANCOUVER AREA)
5377 272ND ST.
LANGLEY, BC V4W 1P1
PHONE: (604) 857-7766
FAX: (604) 857-1377

CANADA
CONCORD, ON
(TORONTO AREA)
65 TIGI COURT
CONCORD, ON L4K 5E4
PHONE: (905) 303-7966
FAX: (905) 303-7965

National Toll Free Phone
(800) 262-5151 EXT. **5305**

National Toll Free Fax
(866) 262-3299

usalum.com **crlaurence.com** **crl-arch.com**

© Copyright 2012, C.R. Laurence Co., Inc.